(12) UK Patent Application (19) GB (11) 2 416 585 (13) A

(43) Date of A Publication 01.02.2006

(21) Application No: 0514480.3

(22) Date of Filing: 14.07.2005

(30) Priority Data:
(31) 10896829 (32) 22.07.2004 (33) US

(71) Applicant(s):
Agilent Technologies, Inc.
(Incorporated in USA - Delaware)
PO Box 10395, 395 Page Mill Road,
Palo Alto, CA 94303-0870,
United States of America

(72) Inventor(s):
Suresh Basoor
Peng Yam Ng
Wee Sin Tan
Wong Chiap Loong

(74) Agent and/or Address for Service:
Williams Powell
Morley House, 26-30 Holborn Viaduct,
LONDON, EC1A 2BP, United Kingdom

(51) INT CL:
H01L 31/12 (2006.01)
G01C 3/08 (2006.01)

(52) UK CL (Edition X):
G1A ARP AR6
H1K KED K1EA K1EB K5E9

(56) Documents Cited:
EP 0493051 A1 WO 2001/011697 A1
US 5629534 A

(58) Field of Search:
UK CL (Edition X) G1A, G1G, H1K
INT CL[7] G01B, G01C, G01S, H01L, H04B
Other: Online: WPI, EPODOC

(54) Abstract Title: **System for and method of transmitting and receiving**

(57) According to at least one embodiment of the invention, a method includes mounting a transmitting device (TX) and a receiving device (RX) on a circuit board, wherein the circuit board includes a layer (100) that blocks waves (e.g., light waves) emitted from the transmitting device, and wherein the transmitting device and the receiving device are mounted in an area (105) defined by the layer. The method further includes manipulating a structure to form a first compartment (102) for the transmitting device and a second compartment (102) for the receiving device, wherein the compartments (101, 102) are separated by a common wall such that each compartment is continuous with at least part of the common wall. The method further comprises mounting the structure on the circuit board. According to this embodiment, the transmitter and the receiver may be part of a proximity sensor, and the layer that blocks waves, the first and second compartments, and the common wall (which may be a folded double wall) operate to prevent cross-talk between the transmitter and the receiver.

FIG. 1

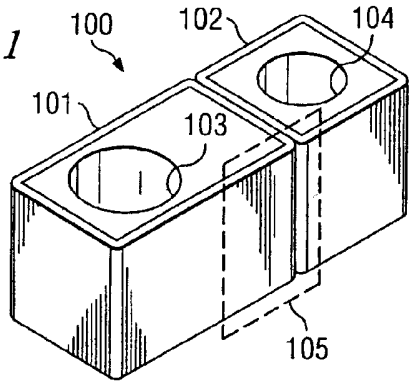

GB 2 416 585 A

Original Printed on Recycled Paper

FIG. 1

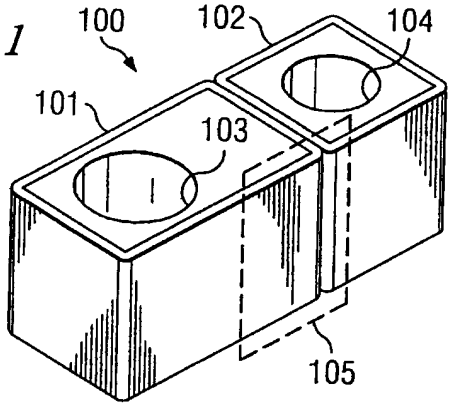
100
102
104
101
103
105

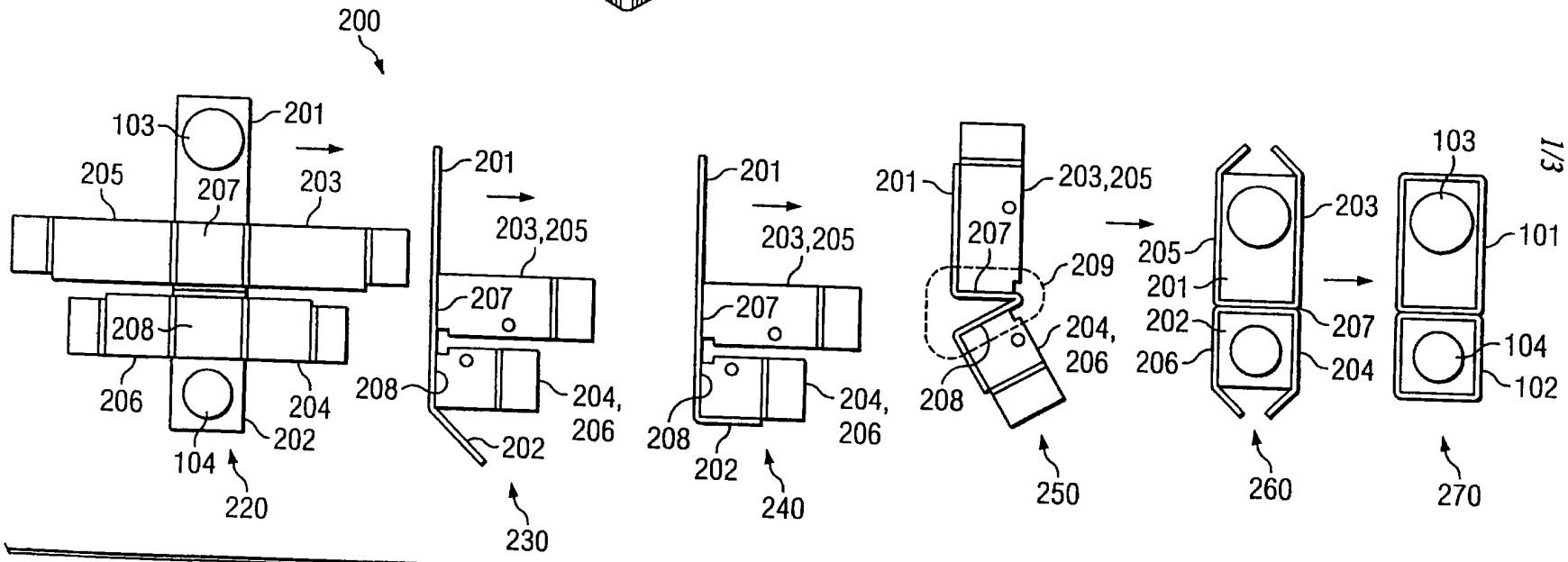
200
103
201
205
207
203
208
206
204
202
104
220
201
203,205
207
208
204,
206
202
230
201
203,205
207
208
204,
206
202
240
201
203,205
207
209
204,
206
208
250
103
203
205
201
202
206
207
204
101
104
102
260
270

FIG. 2

FIG. 3

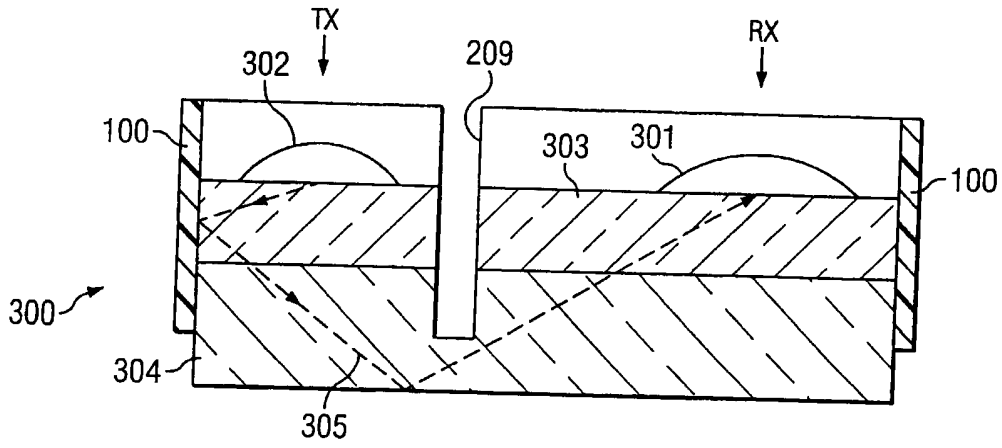

FIG. 4

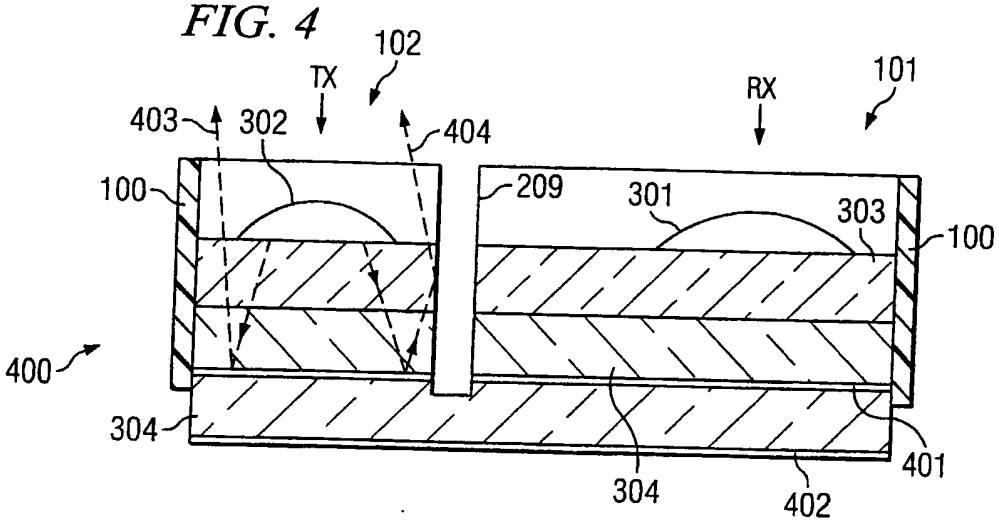

FIG. 5

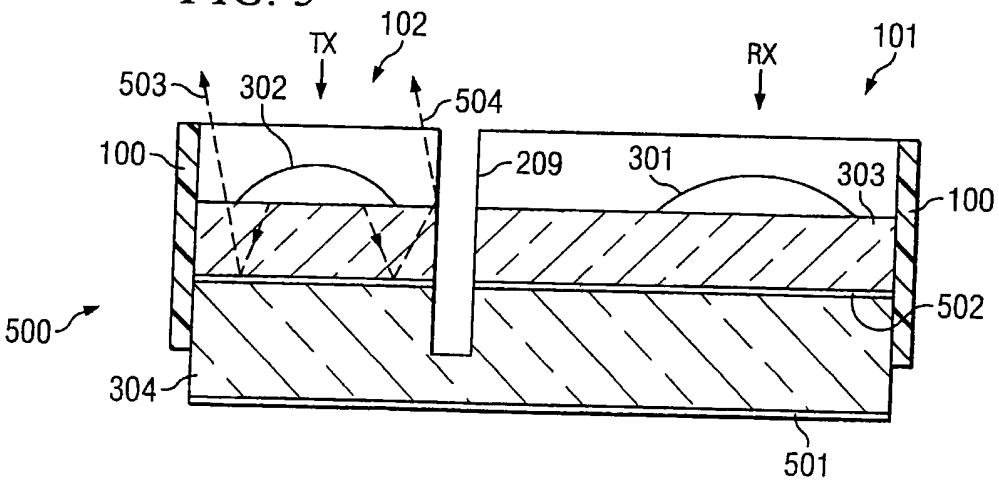

FIG. 6

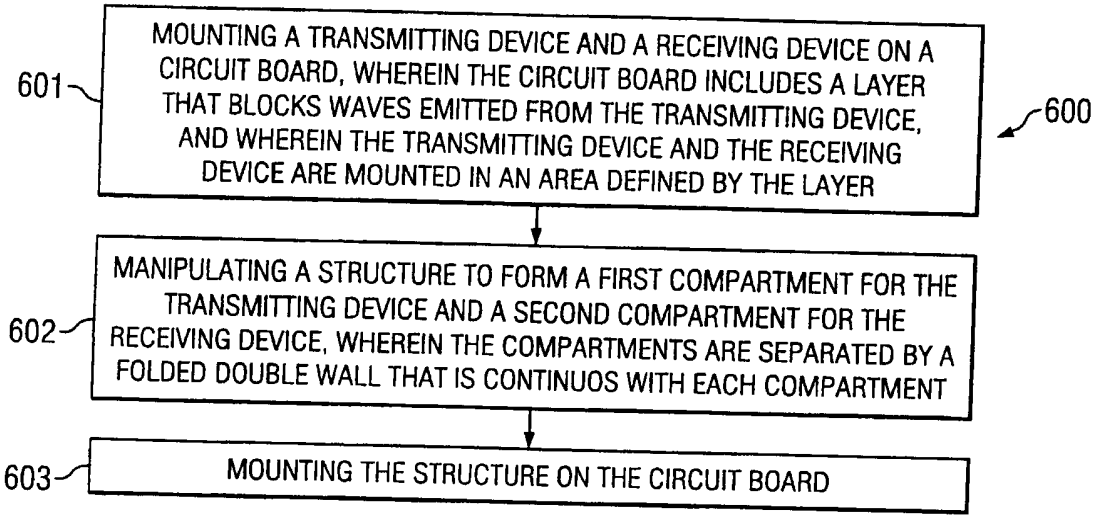

FIG. 7

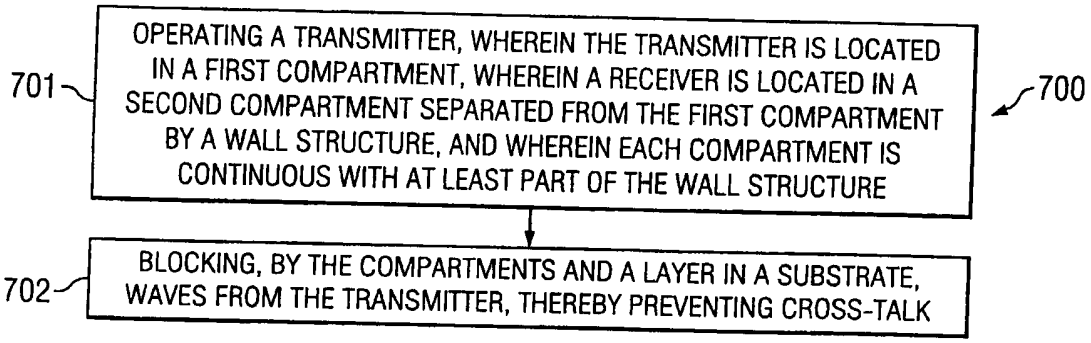

FIG. 8

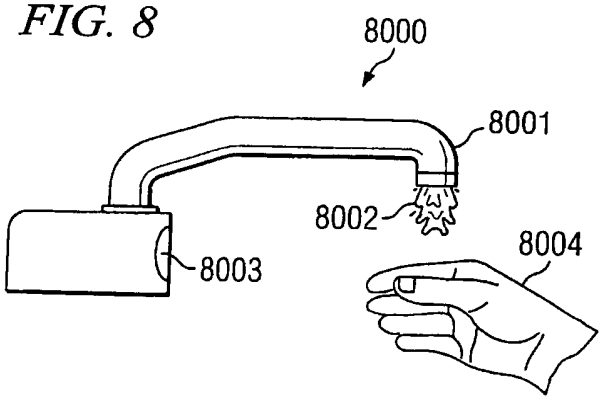

SYSTEM FOR AND METHOD OF TRANSMITTING AND A RECEIVING

This invention relates in general to a system for and method of transmitting and receiving communications, preferably to preventing cross-talk between a transmitter and a receiver, and specifically, to preventing cross-talk in an infrared proximity sensor.

Proximity sensors may be found in various applications, from consumer products to commercial and industrial machines. Traditional proximity sensors usually include one transmitter and one receiver that are placed such that their respective transducers both point outward to a detection region. When an object moves in front of the proximity sensor, it reflects light from the transmitter, some of which is picked up by the receiver. When the receiver picks up light from the transmitter, it sends a signal that is interpreted as indicating that an object is present.

An issue that often arises with proximity sensors is the phenomenon of cross-talk. Cross-talk, in many traditional applications, may be considered to be when light from a transmitter is detected by a receiver without first having been reflected off of an object in the detection zone. Cross-talk is often associated with stray light and unwanted light reaching the receiver, which may hamper the sensor's accuracy and degrade performance.

A traditional approach for reducing cross-talk is to place a piece of material between the transmitter and the receiver or to try to surround each of the transmitter and receiver with separate light-blocking structures that are not continuous with respect to the piece of material that separates the transmitter and receiver. Further, proximity sensors mounted on Printed Circuit Boards (PCBs) may experience some cross-talk from light that is transmitted through the material of the PCB.

The present invention seeks to provide improved transmission and reception of signals.

According to an aspect of the present invention, there is provided a method as specified in claim 1.

According to another aspect of the present invention, there is provided an apparatus as specified in claim 13.

According to another aspect of the present invention, there is provided a system for preventing cross-talk as specified in claim 33.

According to at least one embodiment of the invention, a method includes mounting a transmitting device and a receiving device on a circuit board, wherein the circuit board includes a layer that blocks waves (e.g., light waves) emitted from the transmitting device, and wherein the transmitting device and the receiving device are mounted in an area defined by the layer. The method further includes manipulating a structure to form a first compartment for the transmitting device and a second compartment for the receiving device, wherein the compartments are separated by a folded double wall that is continuous with each compartment. The method further comprises mounting the structure on the circuit board. According to this embodiment, the transmitter and the receiver may be part of a proximity sensor, and the layer that blocks waves, the first and second compartments, and the double wall operate to prevent cross-talk between the transmitter and the receiver.

According to another embodiment, an apparatus comprises a transmitter, a receiver, and a Printed Circuit Board (PCB), wherein the PCB includes a layer of material that blocks electromagnetic waves from the transmitter, and wherein the transmitter and receiver are mounted on the PCB in an area defined by the layer. Accordingly, this embodiment may operate to prevent electromagnetic waves from the transmitter from reaching the receiver through the PCB, thereby preventing cross-talk.

According to yet another embodiment, an apparatus comprises a piece of material manipulated to form two compartments, a folded double wall separating the two compartments, wherein the double wall is continuous with each of the two compartments, and a transmitter and a receiver, wherein each of the transmitter and receiver are substantially within a volume defined by one of the compartments. The two compartments and the double wall may form a shield, which operates to prevent cross-talk. The continuousness of the double wall and the two compartments may function to ensure that waves from one compartment do not reach the other compartment without first being reflected from an object in the detection zone.

The foregoing has outlined rather broadly the features and technical advantages of the teachings herein in order that the detailed description that follows may be better understood. Additional features and advantages will be described hereinafter which form the subject of the claims. It should be appreciated that the conception and specific embodiment disclosed may be readily utilized as a basis for modifying or designing other structures for carrying out the same

purposes. It should also be realized that such equivalent constructions do not depart from the appended claims.

Embodiments of the present invention are described below, by way of example only, with reference to the accompanying drawings in which:

FIGURE 1 is an illustration of a shield, adapted according to various embodiments, for preventing cross-talk between a receiver and a transmitter;

FIGURE 2 is an illustration of a manipulating process, adapted according to various embodiments, for forming a shield;

FIGURE 3 is an illustration of an example system, wherein a shield is mounted on a PCB;

FIGURE 4 is an illustration of an example proximity sensor unit, adapted according to various embodiments, for preventing cross-talk;

FIGURE 5 is an illustration of an example proximity sensor unit, adapted according to various embodiments, for preventing cross-talk;

FIGURE 6 is a flowchart illustrating an example method for preventing cross-talk;

FIGURE 7 is a flowchart that depicts an example method, according to various embodiments, for preventing cross-talk;

FIGURE 8 is an illustration that depicts an example application that employs a proximity sensor unit, adapted according to various embodiments.

FIGURE 1 is an illustration of shield 100, adapted according to various embodiments, for preventing cross-talk between a receiver and a transmitter. Shield 100, in this example, is constructed from material that is manipulated to form compartments 101 and 102. An example construction is discussed below with regard to FIGURE 2. Area 105 of shield 101 depicts the separation between compartments 101 and 102, and, as will be explained below, compartments 101 and 102 are separated by a common wall structure, wherein each of the compartments are continuous with the wall structure. The common wall structure cannot be seen in FIGURE 1, but an example is seen in FIGURE 2, as a folded double wall.

In this particular embodiment, shield 100 is designed to prevent cross-talk between a receiver (RX) and a transmitter (TX) (not shown in FIGURE 1), when each of the TX and RX are substantially within a volume of one of the compartments. In this example, an RX may be placed in compartment 101, and a TX may be placed in compartment 102. That each of the TX and RX

are substantially within a volume of one of the compartments means that some, but not necessarily all, of each of the TX and RX apparatuses are located inside the compartments, while being sufficiently located within compartments 101 and 102 such that the common wall structure can act as a barrier to prevent cross-talk. For example, in some embodiments, the transducers of each of the TX and RX will be located in compartments, whereas the wires that are in electrical communication with the transducers to carry signals and power may be routed outside of the compartments. Alternative embodiments may employ other arrangements, and all are within the scope of the invention as long as shield 100 can, by itself or with other components, be used to reduce or prevent cross-talk.

Aperture 104 allows the TX to transmit electromagnetic waves outside of shield 100, and aperture 103 allows the RX to receive electromagnetic waves from outside shield 100. In this example, the TX and RX may be part of a proximity sensor, such that an object that is in front of apertures 103 and 104 (i.e., in the detection region) will reflect waves from the TX, and the RX will receive at least some of the reflected waves from the object. When the RX receives waves from the TX it signals that an object is near. Accordingly, in many embodiments it is undesirable for the RX to receive waves from the TX that have not been reflected from an object in the detection region because the reception of those waves will trigger a false indication (i.e., cross-talk). Cross-talk may sometimes be referred to as "direct communication" between the transmitter and receiver, though the waves may be reflected from one or more surfaces other than an object in the detection region.

Shield 100 acts to prevent cross-talk by blocking waves from the TX to the RX that are not reflected from an object in the detection region. Specifically, the walls of compartments 101 and 102, including the common wall structure separating the compartments, act to isolate the RX from the waves emitted from the TX, unless, of course, those waves are received through aperture 103. As explained further below, shield 100 may be combined with a TX and RX and mounted to a circuit board to produce a proximity sensor unit for use in a variety of applications, although applications that use a transmitter and a receiver for other than proximity sensing are within the scope of various embodiments.

FIGURE 2 is an illustration of manipulating process 200, adapted according to various embodiments, for forming shield 100. Manipulating process 200 includes steps 220, 230, 240, 250, 260, and 270.

In step 220, the structure is a single piece of material that is laid flat, and it can be seen that the material includes sections 201-208. Apertures 103 and 104 may be seen as cut-out areas of sections 201 and 202, respectively. In step 230, the material is folded such that sections 201, 202, 207, and 208 are bent 90 degrees from sections 203 and 204 and appear as nearly one-dimensional lines. Sections 205 and 206 are folded an additional 90 degrees such that they are directly above sections 203 and 204 in this view. Section 202 is also bent part of the way toward sections 204 and 206.

In step 240, section 202 is bent the rest of the way toward sections 202 and 204. Section 201 will be bent in a similar manner toward sections 203 and 205, as seen in step 250. It should be noted that the volume defined by sections 202, 204, 206, and 208 will be used to form compartment 102, and the volume defined by sections 201, 203, 205, and 207 will be used to form compartment 101. Also in step 250, the structure is bent such that sections 207 and 208 form an acute angle. As can be seen in step 250, sections 207 and 208 are used to form folded double wall 209 that was mentioned with respect to FIGURE 1. Accordingly, folded double wall 209 may be referred to as a "reverse-bend folded double wall." In step 260, the structure is shown with surfaces 201 and 202 facing the viewer. In this step, the structure is bent such that sections 207 and 208 are touching or nearly touching, thus forming folded double wall 209. Further, the end portions of sections 203-206 are bent toward the structure. Step 270 shows the final shape of the structure, which can be recognized as shield 100. The difference between the result of step 260 and step 270 is that in step 270, the end portions of sections 203-206 are bent to enclose sections 101 and 102.

Two items should be noted regarding shield 100 as formed in steps 220-270. First, shield 100 may be formed such that folded double wall 209 is continuous with compartments 101 and 102. A result is that there are no gaps where sections 203 and 205 join section 207, and the same can be said for sections 204, 206, and 208. The continuousness of the material that results in the lack of gaps and the folded double wall provides a more complete separation of the TX and RX, and helps to assure that in some embodiments, no waves (or very few waves) will penetrate

compartment 101 from compartment 102, such that cross-talk is prevented. That wall 209 is a double wall helps to ensure that the material is thick enough to stop all (or nearly all) waves from passing directly from compartment 102 to compartment 101. The continuousness also means that shield 100 can be formed from a single piece of material, as shown in FIGURE 2.

The second item that should be noted is that step 270 provides a view of shield 100 from the top (or detection area) only, and that the bottom of shield 100 is not enclosed. In other words, each compartment is open both at its respective aperture 103 or 104 and at its bottom side. As explained further below, various embodiments may employ one or more techniques to prevent cross-talk occurring through the bottom side when mounting shield 100 on a Printed Circuit Board (PCB).

In an example embodiment, the length of compartments 101 and 102 together is about 7 mm, while the height and width are each about 3 mm. The length of compartment 101, in this embodiment, is 4 mm, while the length of compartment 102 is 3 mm.
Compartment 102 may be larger than compartment 101 in order to accommodate an RX that is slightly larger than a corresponding TX. Thus, a proximity sensor contained in shield 100 is of a small size and may be deployed in various consumer, business, and industrial applications without occupying a large volume. Also, in this example embodiment, the material may be constructed of stainless steel that is 0.1 mm thick. Such a construction may provide adequate cross-talk shielding for a variety of proximity sensors, including proximity sensors that operate in the infrared (IR) frequency band. Other embodiments may employ different materials and/or thicknesses, and all are within the scope of embodiments as long as the qualities chosen provide adequate shielding for the intensity and frequency of the waves used in the particular application. For example, alternate embodiments may use metals other than stainless steel or may use plastics or ceramics. However, stainless offers many advantages not offered by some other materials, such as resistance to corrosion, hardness, stiffness, and the ability to retain its shape after folding.

Although the previous example (along with other examples below) illustrates an embodiment wherein shield 100 is a single-piece structure with a folded double wall, alternative embodiments may employ other forms for shield 100 that include a common wall structure, wherein each compartment is continuous with at least part of the wall structure. For example, an alternative embodiment may be similar to that depicted in FIGURE 2, but with the fold in wall

209 cut such that the wall (and shield 100 itself) are split in two separate pieces. In this example embodiment, wall 209 is still a common wall structure, since both halves are included in shield 100, and each compartment is still continuous with its corresponding half of wall 209. In another alternative embodiment, wall 209 may be a quadruple wall from having extra material that is folded twice, rather than once (notice it is folded once on step 250). Numerous other embodiments not specifically disclosed herein, are also within the scope of various embodiments of the present invention.

FIGURE 3 is an illustration of example system 300, wherein shield 100 is mounted on PCB 304. Notice that the walls of shield 100 (including double wall 209) extend through a portion of the depth of PCB 304. In this example, TX 302 and RX 301 are substantially within a volume defined by shield 100, and also mounted on PCB 304. Further, TX 302 and RX 301 may be part of single-piece proximity sensor, wherein TX 302 and RX 301 are in a single package and are coupled to one another such that one TX/RX component is mounted on PCB 304, rather than each of TX 302 and RX 301 being mounted separately. A layer of molding 303 is on top of PCB 304, and it functions to physically hold TX 302 and RX 301 in place while also collimating the light waves for better performance. In this example, it may be made of an epoxy-based plastic.

In many practical applications, a proximity sensor (or other type of TX and RX) will be mounted on a PCB, similar to other components that make up an electronic device. Such an arrangement may allow the proximity sensor to interface with the power and control systems of the device while benefiting from the structural support offered by the PCB. Wires to send and receive signals by TX 302 and RX 301 are not shown in this example for simplicity; however, practical applications may employ a number of hard-wired connections that extend through at least a portion of PCB 304, and those applications are within the scope of various embodiments. PCBs, such as PCB 304, are usually made out of fiberglass, and are, therefore, usually light-conductive. It is the light-conductive property of PCB 304 that facilitates cross-talk in example system 300. Thus, IR light wave 305 travels through PCB 304 from TX 302 to RX 301, reflecting on the inside of shield 100 and the bottom of PCB 304, thereby causing RX 301 to indicate (falsely) that an object is nearby.

Accordingly, to further prevent cross-talk, it may be desirable to implement another light-blocking structure to further isolate RX 301 from waves that travel through PCB 304 from TX

302. FIGURE 4 is an illustration of example proximity sensor unit 400, adapted according to various embodiments, for preventing cross-talk. Proximity sensor unit 400 is similar to system 300 in that TX 302, RX 301, and shield 100 are mounted on PCB 304. Proximity sensor unit 400, however, adds copper layers 401 and 402. Copper layer 401 acts as a light-blocking layer to reduce cross-talk by further isolating RX 301 from the electromagnetic waves from TX 302. TX 302 and RX 301 are mounted on PCB 304 in an area defined by copper layer 401. In this example embodiment, copper layers 401 and 402 may extend in any direction as far as PCB 304 extends, as long as copper layer 401 contains the footprint of shield 100.

In this example, copper layer 401 runs between two layers of PCB 304, and shield 100 is mounted such that its walls (including double wall 209) extend below copper layer 401. In this way, compartment 101, folded double wall 209, and copper layer 401 act to surround RX 301, and compartment 102, folded double wall 209, and copper layer 401 act to surround TX 302. Accordingly, in this example, IR waves 403 and 404 are not able to pass through PCB 304 from TX 302 to RX 301. Instead, IR waves 403 and 404 are blocked by copper layer 401 and reflected such that they exit shield 100 at aperture 104 (FIGURE 1). This helps to ensure that the waves received by RX 301 are reflected from an object in the detection range, rather than from cross-talk.

Many PCBs are sold on the market with a thin copper layer on both the top and the bottom. Accordingly, an example technique to make proximity sensor unit 400 may include acquiring two PCBs, each with two copper layers. The PCBs are then bolted together, such that there is a single copper layer on top, then a PCB layer below that, then two copper layers below the PCB layer, then the bottom PCB layer, which has a single layer of copper on its bottom surface. The topmost and bottommost copper layers may then be etched to form circuits, leaving a PCB-mounted circuit, which includes two copper layers sandwiched between two PCB layers.

Accordingly, in such an example embodiment, copper layer 401 may actually be two copper layers, and copper layer 402 may be etched to form circuits. In example unit 400, the topmost copper layer is not shown because it has been etched to form circuits, while copper layer 402 has not been etched. In the example embodiment depicted as system 400, copper layer 401 is 20-30 microns thick, which is adequate to block light from some IR transmitters. Alternative embodiments may use other thicknesses, number of layers, or other types of waves in the

electromagnetic spectrum, and all are within the scope of embodiments, as long as the light-blocking layer blocks light in an adequate manner for the application in which it is disposed.

Using one or more copper layers as a light-blocking structure, in some embodiments, may have both desirable and undesirable effects. For instance, while copper is a good light-blocking substance for some applications, it may produce extra cost in the manufacturing process by dulling blades used to cut the boards. It should be noted that boards may be cut during manufacture to produce desired sizes, and also during the mounting process to accommodate components which must extend below the surface of the topmost layer. Further, one or more copper layers in a board may fail to cut in a smooth manner, thereby leaving jagged edges (called "burrs") which may unintentionally make electrical contact with elements mounted on the board. Accordingly, another light-blocking material may be desirable in some applications.

FIGURE 5 is an illustration of example proximity sensor unit 500, adapted according to various embodiments, for preventing cross-talk. Proximity sensor unit 500 is similar to system 300 and unit 400 in that all mount TX 302, RX 301, and shield 100 on PCB 304. Example unit 500 is different from example unit 400, because system 500 includes lightblocking soldermask layers 501 and 502 and omits copper layers.

In this example embodiment, shield 100 is mounted such that the walls of shield 100 (including double wall 209) extend below layer 502. In this manner, compartment 101, folded double wall 209, and layer 502 act to surround RX 301, and compartment 102, folded double wall 209, and layer 502 act to surround TX 302. Accordingly, IR waves from TX 302 are prevented from reaching RX 301 through PCB 304 because they are reflected from layer 502 and shield 100. Thus, cross-talk is prevented.

In various PCB applications, soldermask may be used as an insulator that is applied to the circuits on an etched PCB in order to protect those circuits from electrical contact with other conductors. There are various varieties of soldermask, including dry-film and liquid. In this example embodiment, wherein TX 302 emits IR light, it is important that the soldermask chosen for the light-blocking layer be able to block IR light. Similarly, for applications that use other electromagnetic frequencies, it is important to select a soldermask for the light-blocking layer that is operable to block light in that frequency range. Soldermask layer 501 is optional, but may

be applied as a redundant mechanism to block any waves which might otherwise penetrate PCB 304 and layer 402.

In some applications, soldermask may provide one or more desirable qualities. For instance, it may be an excellent light-blocking material, even when applied in thin layers. Further, it may avoid dulling cutting blades or producing burrs, as with copper layers. Additionally, the cost of soldermask may make it an economically attractive material for the manufacture of such applications.

FIGURES 4 and 5 both depict systems for preventing cross-talk using one or more light-blocking layers applied to a PCB. Alternative embodiments may utilize other materials, thicknesses, and electromagnetic frequencies. It should be noted that the various embodiments herein are not limited to the specific embodiments disclosed. For instance, an embodiment which uses opaque materials, rather than reflective materials, to block light is within the scope of the embodiments. Further, an embodiment which uses a material other than copper or soldermask to block light, or an embodiment which uses radio waves, microwaves, or the like also falls within the scope of the embodiments.

FIGURE 6 is a flowchart illustrating example method 600 for preventing cross-talk. In block 601, a transmitting device and a receiving device are mounted on a circuit board, wherein the circuit board includes a layer that blocks waves emitted from the transmitting device, and wherein the transmitting device and the receiving device are mounted in an area defined by the layer. Various techniques for mounting the transmitting device and the receiving device are within the scope of various embodiments, including manual mounting. The circuit board may be any of a variety of circuit boards, including, for example, a PCB. In an example embodiment, the transmitting device and the receiving device are IR-frequency devices and are included as part of a proximity sensor.

In block 602, a structure is manipulated to form a first compartment for the transmitting device and a second compartment for the receiving device, wherein the compartments are separated by a folded double wall that is continuous with each compartment. In an example embodiment, after the manipulating, the structure is similar to shield 100 (FIGURE 1), and the folded double wall is similar to wall 209 (FIGURE 2). The manipulating may include, for

example, folding, bending, creasing, and the like, as long as the particular technique is suitable for forming the compartments from the material used to construct the structure.

In block 603, the structure is mounted on the circuit board. The structure may be mounted on the circuit board with any of a variety of techniques suitable for the mounting, such as a customized pick and place technique utilizing glue to attach the shield to the PCB. As in the embodiments depicted in FIGURES 4 and 5, the structure may be mounted such that its footprint is entirely within the area defined by the light-blocking layer and wherein each compartment is aligned with the TX or RX, respectively. Further, the structure may be mounted before or after the transmitting and receiving devices are mounted, depending on the particular manufacturing technique that is chosen.

Mounting the structure as described above, with a folded double wall that is continuous with each of two compartments, may be advantageous compared to mounting a structure wherein the compartments are separate. For example, the continuousness of the material may help to eliminate some alignment issues that would be present in mounting a shield wherein the compartments are separate. Also, as explained above, the continuousness of the metal helps to eliminate gaps that might let electromagnetic waves penetrate the shield and cause cross-talk.

FIGURE 7 is a flowchart that depicts method 700, according to various embodiments, for preventing cross-talk. In block 701, a transmitter is operated, wherein the transmitter is located in a first compartment, wherein a receiver is located in a second compartment separated from the first compartment by a wall structure, and wherein each compartment is continuous with at least part of the wall structure. In an example embodiment, the wall structure is a folded double wall structure, and the compartments form a shield, as seen in FIGURE 2. Further, the transmitter may be operated, for example, by causing it to emit electromagnetic waves, such as IR waves.

In block 702, the compartments and a layer in a substrate block waves from the transmitter, thereby preventing cross-talk. In an example embodiment, the substrate is a PCB, and the layer is soldermask layer that is operable to block IR light waves. The compartments may form a shield that is mounted on the PCB. While waves are blocked in this example, some waves may still reach the receiver from the transmitter by being reflected off of an object in the detection zone.

FIGURE 8 depicts an example application that employs a proximity sensor, adapted according to various embodiments. Water faucet 800 is an automatic, touchless faucet, similar to those found in washrooms worldwide. However, faucet 800 employs a proximity sensor unit, adapted according to various embodiments, which is disposed behind protective, IRtransparent cover 803.

The elimination of cross-talk provided by shield 100 (FIGURE 1) may facilitate the use of a more sensitive (and, therefore, more precise) proximity sensor. A control system (not shown) can be programmed to control water flow 802 from opening 801 according the presence or absence of hand 804. Eliminating water flow 802 when hand 804 is not under opening 801 may help conserve water and protect the environment.

The scope of the present application is not intended to be limited to the particular embodiments of the process, machine, manufacture, composition of matter, means, methods and steps described in the specification. As one will readily appreciate from the disclosure, processes, machines, manufacture, compositions of matter, means, methods, or steps, presently existing or later to be developed that perform substantially the same function or achieve substantially the same result as the corresponding embodiments described herein may be utilized. Accordingly, the appended claims are intended to include within their scope such processes, machines, manufacture, compositions of matter, means, methods, or steps.

The disclosures in United States patent application No 10/896,829, from which this application claims priority, and in the abstract accompanying this application are incorporated herein by reference.

CLAIMS

1. A method including the steps of:

mounting a transmitting device and a receiving device on a substrate, wherein the substrate includes a layer that blocks waves emitted from the transmitting device, and wherein the transmitting device and the receiving device are mounted in an area defined by the layer;

manipulating a structure to form a first compartment for the transmitting device and a second compartment for the receiving device, wherein the compartments are separated by a common wall, and wherein each compartment is continuous with at least part of the common wall; and

mounting the structure on the substrate.

2. A method according to claim 1, wherein the substrate is a circuit board.

3. A method according to claim 1 or 2, wherein the structure is made of a single piece of material.

4. A method according to claim 1, 2 or 3, wherein the common wall is a folded double wall.

5. A method according to any preceding claim, wherein mounting the structure is performed before mounting the transmitting and receiving devices.

6. A method according to any preceding claim, wherein manipulating the structure comprises bending the structure.

7. A method according to any preceding claim, including operating the transmitting device and the receiving device as a proximity sensor.

8. A method according to any preceding claim, including employing the proximity sensor in a water faucet.

9. A method according to any preceding claim, wherein mounting the structure comprises aligning the structure so that its footprint is within the area defined by the layer.

10. A method according to any preceding claim, wherein the layer comprises a metallic layer or a soldermask layer.

11. A method according to any preceding claim, wherein the layer blocks waves from direct communication with the receiving device.

12. A method according to any preceding claim, wherein the transmitting device and the receiving device are in a single package and are coupled to one another, such that mounting the transmitting device and the receiving device on a circuit board comprises mounting a single transmitter/receiver unit.

13. Apparatus including:

a transmitter;

a receiver; and

a printed circuit board (PCB), wherein the PCB includes a layer of material that blocks wireless communication from the transmitter, and wherein the transmitter and receiver are mounted on the PCB in an area defined by the layer.

14. Apparatus according to claim 13, wherein the layer of material comprises a liquid soldermask.

15. Apparatus according to claim 13 or 14, wherein the layer of material comprises one or more metallic layers.

16. Apparatus according to claim 15, wherein at least one metallic layer comprises copper.

17. Apparatus according to any one of claims 13 to 16, wherein wireless communication is infrared waves.

18. Apparatus according to any one o claims 13 to 17, wherein the transmitter and receiver are part of a single-piece proximity sensor.

19. Apparatus according to any one of claims 13 to 18, including a shield mounted on the PCB in the area defined by the layer of material.

20. Apparatus according to claim 19, wherein the transmitter, the receiver, the PCB, and the shield are included in a proximity sensor unit.

21. An apparatus including:

two compartments;

a common wall separating the two compartments, wherein the each compartment is continuous with at least part of the common wall;

a transmitter, wherein the transmitter is substantially within a volume defined by one of the compartments; and

a receiver, wherein the receiver is substantially within a volume defined by the other compartment.

22. Apparatus according to claim 21, wherein the transmitter, the receiver, and the compartments are mounted on a Printed Circuit Board (PCB).

23. Apparatus according to claim 22, wherein the PCB includes a layer that blocks waves emitted from the transmitter.

24. Apparatus according to claim 23, wherein the compartments and the layer are operable to prevent cross-talk between the transmitter and the receiver.

25. Apparatus according to any one of claims 21 to 24, wherein the compartments include a single piece of material, and wherein the compartments and the common wall are formed by bending the piece of material.

26. Apparatus according to claim 25 wherein the compartments comprise stainless steel.

27. Apparatus according to any one of claims 21 to 26, wherein each of the two compartments includes an aperture.

28. Apparatus according to any one of claims 21 to 27 wherein the common wall is a folded double wall.

29. A method including the steps of:

operating a transmitter, wherein the transmitter is located in a first compartment, wherein a receiver is located in a second compartment separated from the first compartment by a wall structure, and wherein each compartment is continuous with at least part of the wall structure; and

blocking, by the compartments and a layer in a substrate, waves from the transmitter, thereby preventing cross-talk.

30. A method according to claim 29, wherein the wall structure is a folded double wall structure.

31. A method according to claim 29 or 30, wherein the substrate is a printed circuit board (PCB), the layer is a copper layer, and the compartments are mounted on the PCB.

32. A method according to claim 29, 30 or 31, wherein the transmitter and receiver are operated as a proximity sensor.

33. A system for preventing cross-talk between a transmitter and a receiver including:

means for separating the transmitter and receiver with a common wall; and

means for mounting the transmitter, the receiver, and the means for separating the transmitter and the receiver on a Printed Circuit Board (PCB), wherein the PCB includes a layer that blocks electromagnetic waves emitted by the transmitter.

34. A system according to claim 33, wherein the means for separating the transmitter and receiver include a structure, wherein the common wall is a folded double wall that is part of the structure, wherein the structure includes a first compartment for the transmitter and a second compartment for the receiver, and wherein the double wall is continuous with each of the compartments.

35. A system according to claim 34, wherein the compartments, the folded double wall, and the layer surround each of the transmitter and receiver, except for an aperture for each of the transmitter and receiver, thereby preventing cross-talk.

36. A system for preventing cross-talk substantially as hereinbefore described with reference to and as illustrated in the accompanying drawings.

37. A method of preventing cross-talk substantially as hereinbefore described with reference to and as illustrated in the accompanying drawings.

INVESTOR IN PEOPLE

Application No:	GB0514480.3	**Examiner:**	Matthew Perkins
Claims searched:	1 to 20, 29 to 35	**Date of search:**	30 September 2005

Patents Act 1977: Search Report under Section 17

Documents considered to be relevant:

Category	Relevant to claims	Identity of document and passage or figure of particular relevance
X	29, 31, 32 and 33	EP 0493051 A1 (SHARP) See whole document
X	29 and 33	US 5629534 A (NIPPONDENSO) See abstract, figures, column 7 lines 49 to 65.
X	13, 15, 16 and 17	WO 01/11697 A1 (QT OPTOELECTRONICS) See abstract and pages 5 to 6

Categories:

X	Document indicating lack of novelty or inventive step	A	Document indicating technological background and/or state of the art.
Y	Document indicating lack of inventive step if combined with one or more other documents of same category	P	Document published on or after the declared priority date but before the filing date of this invention
&	Member of the same patent family	E	Patent document published on or after, but with priority date earlier than, the filing date of this application

Field of Search:

Search of GB, EP, WO & US patent documents classified in the following areas of the UKC^{X} :

G1A; G1G; H1K

Worldwide search of patent documents classified in the following areas of the IPC^{07}

G01B; G01C; G01S; H01L; H04B

The following online and other databases have been used in the preparation of this search report

Online: WPI, EPODOC