E. S. HART.

DEVICE FOR UNLOADING AND DISTRIBUTING COAL.

APPLICATION FILED JUNE 18, 1906.

946,219.

Patented Jan. 11, 1910.

3 SHEETS—SHEET 1.

Fig. 1.

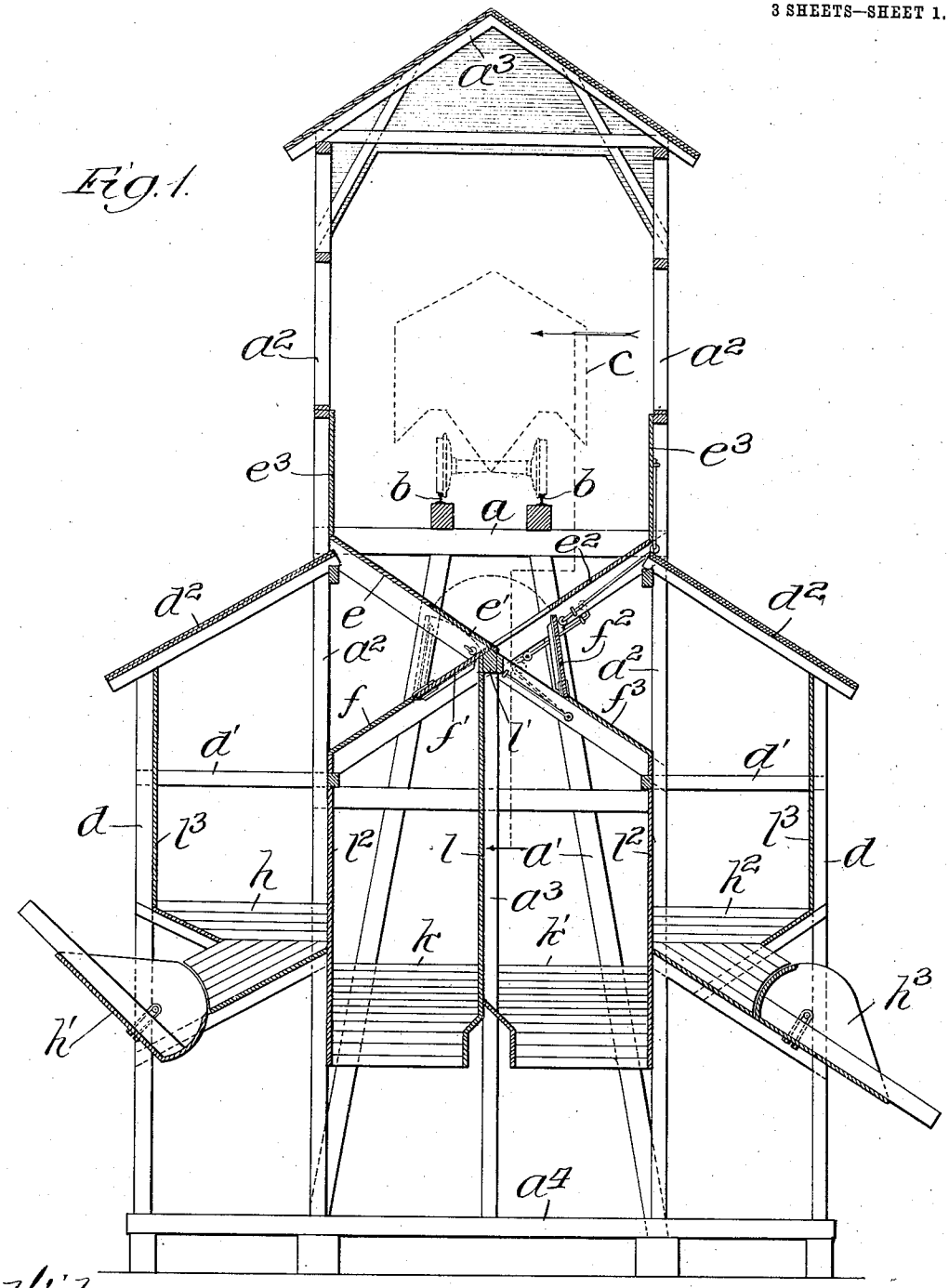

Witnesses:
C. E. Gaylord.
Chas. H. Buell.

Inventor:
Eli S. Hart,
By Thomas F. Sheridan,
Atty.

E. S. HART.

DEVICE FOR UNLOADING AND DISTRIBUTING COAL.

APPLICATION FILED JUNE 18, 1908.

946,219. Patented Jan. 11, 1910.

3 SHEETS—SHEET 2.

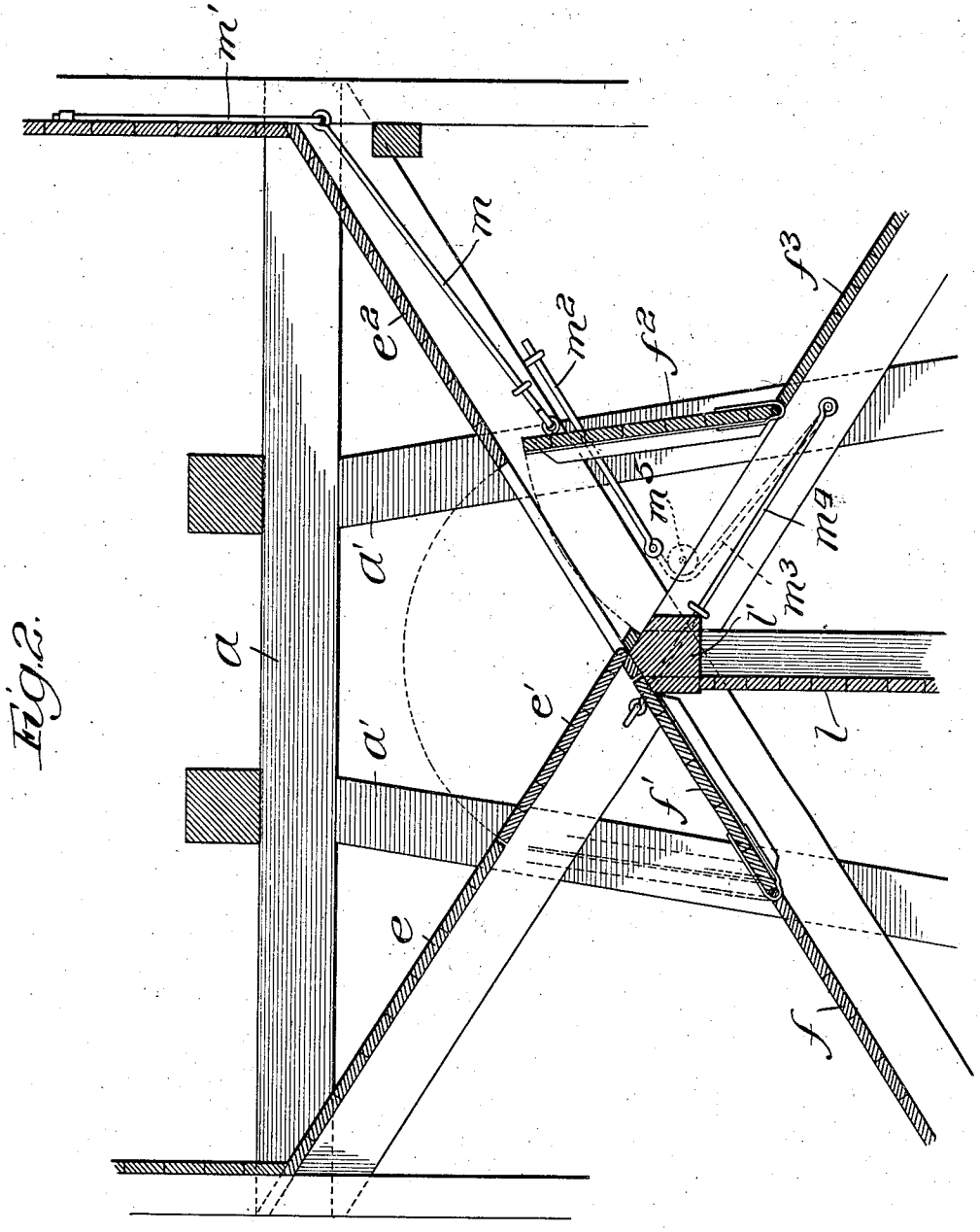

Fig. 2.

Witnesses:
Chas. E. Gaylord.
Chas. H. Buell.

Inventor:
Eli S. Hart,
By Thomas F. Sheridan,
Atty.

E. S. HART.

DEVICE FOR UNLOADING AND DISTRIBUTING COAL.

APPLICATION FILED JUNE 18, 1906.

946,219. Patented Jan. 11, 1910.

3 SHEETS—SHEET 3.

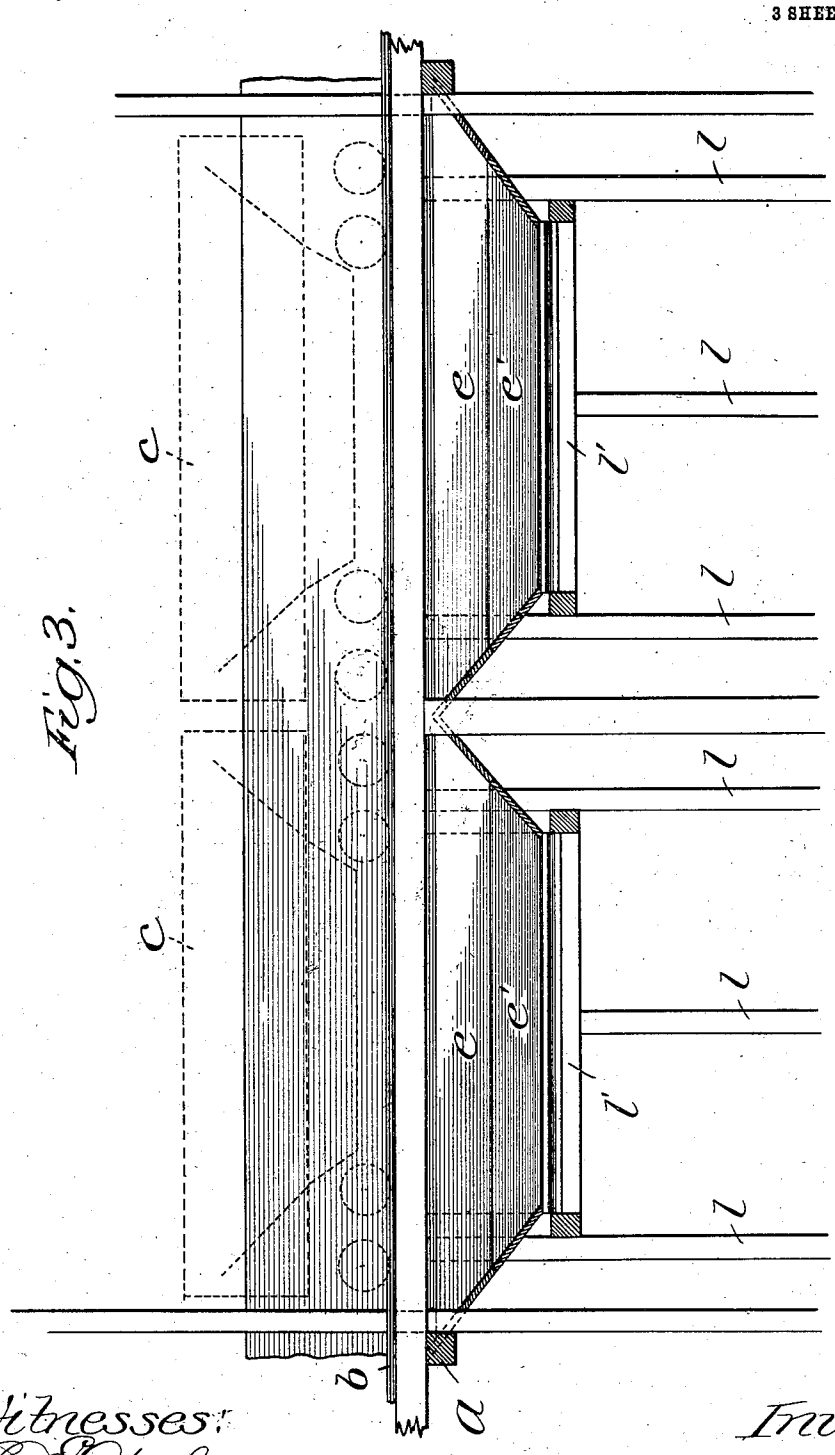

Witnesses:
Chas. E. Gaylord.
Chas. H. Buell.

Inventor:
Eli S. Hart,
By Thomas F. Sheridan,
Atty.

UNITED STATES PATENT OFFICE.

ELI S. HART, OF CHICAGO, ILLINOIS, ASSIGNOR TO GRAVITY COAL BIN COMPANY, OF CHICAGO, ILLINOIS, A CORPORATION OF MAINE.

DEVICE FOR UNLOADING AND DISTRIBUTING COAL.

946,219. Specification of Letters Patent. **Patented Jan. 11, 1910.**

Application filed June 18, 1906. Serial No. 322,265.

To all whom it may concern:

Be it known that I, ELI S. HART, a citizen of the United States, residing at Chicago, in the county of Cook and State of Illinois, have invented certain new and useful Improvements in Devices for Unloading and Distributing Coal, of which the following is a specification.

My invention relates to devices for unloading and distributing coal from railway dump cars; and has for its object to provide an improved device of this kind by means of which coal may be quickly unloaded from a car and distributed to any desired point.

Other objects will appear from the detailed description hereinafter given.

My invention consists in the combinations and details hereinafter described and claimed.

In the drawings—Figure 1 is a transverse sectional elevation of my unloading and distributing device. Fig. 2 is an enlarged transverse sectional elevation of a portion of the device shown in Fig. 1, showing the arrangement of distributing doors. Fig. 3 is a longitudinal sectional elevation.

In the drawings I show a trestle comprising a platform a supported upon uprights a', a^2, the uprights a' being inclined as shown, having their upper ends supporting the platform beneath the tracks b.

c indicates a car ready to discharge its load. I have shown this car in outline as a dumping car of the well-known "Rodger" type, though it will be understood that any convenient form of dumping car may be used.

The uprights a^2 extend above the platform and carry at their upper ends a roof a^3 suitably braced and strengthened in any convenient manner.

d indicates uprights, supporting roof portions d^2, below the platform a, and d' indicates suitable cross braces connecting the uprights d, a^2. The entire structure is suitably supported upon a floor or base portion a^4.

The platform a is inclosed in a hopper portion comprising inclined bottom portions e, e^2 below the platform, these inclined portions being attached at their upper ends to the platform a and at their lower meeting edges to a longitudinal beam l' supported upon uprights l extending lengthwise of the structure, and vertical side portions e^3 extending above the platform. The inclined portions of the hopper bottom are provided at their lower edges with door openings, and the door e' is pivoted on the longitudinal support l' so as to swing to either side thereof to close one or the other of the door openings, as may be desired.

Below the inclined portions of the hopper bottom are inclined chutes f, f^3 provided at their upper edges with swinging doors f', f^2, respectively. Directly below these chutes f, f^3 are chutes k, k' supported between the portions l, a^2. Also below the hopper and inclined chutes f, f^3, but to one side thereof upon each side of the structure, are chutes h, h^2 having pivoted portions h', h^3, respectively, conveying material to the outside of the structure. Suitable wall portions l^2, l^3 are provided forming an inclosure for the material being discharged and preventing the accidental escape of material from one compartment to the other.

The operation of my improved distributing device is as follows: Coal from the car c will all be deposited in the upper hopper portion, whence it will escape through the opening in the bottom of the hopper portion to one of the chutes f, f^3. Should the doors of one of these chutes be opened, as indicated at the right in Fig. 1, the material will pass vertically down to the chute immediately below these inclined chutes—in this instance to the chutes k'. On the other hand, should the door in the inclined chute be closed, for example, if the door f^2 be closed, the material will pass down the inclined chute to a side chute h^2, whence it will be conveyed through the pivoted portion h^3 to the outside of the structure. It will be understood that it may be delivered to wagons or cars, or to suitable coal pockets placed at this point, as may be desired. By swinging the door e' to the right—as indicated in dotted line in Fig. 1—thus forming the opening in the inclined portion e of the chute, the material may be distributed to the chute k or to the side chute h, as may be desired, the door f' being suitably manipulated for this purpose.

It will be seen that I have provided four separate courses for the material delivered to the hopper portion—that is, coal delivered to the hopper portion from the car may be conveyed to four separate points without moving the car, by the simple manipulation

of the doors. It sometimes happens that coal of different sizes is carried in the same car, the car in this case being provided with suitable divisions. It will be understood that these different grades of coal may be delivered one after the other to the hopper and each grade conveyed to its own pocket or point of storage, and this without moving the car on the track.

Any suitable means may be provided for operating the swinging doors. I have shown the doors f', f^2 as connected by rods m, m^4, respectively, to operate rods m', m^2, respectively, the rod m^2 being connected to the rod m^4 through the medium of an idler m^5 and flexible connection m^3. Any other suitable operating means may be employed. It is desirable, however, that the operating means for the doors be so arranged as to be operated from a single point. The advantages of my improved distributing devices are obvious and will be readily understood.

I have described thus far but one section of the structure. It will be understood that the structure may be built in as many sections as may be desired, each section corresponding in length to the height of a car, and each section being provided with the hoppers and chutes above described. The cars being in position above their hoppers and the doors arranged to convey the coal from each car to the desired point, the load of the entire train may be dumped and carried to the points of storage or delivery desired, as will be readily understood.

I claim:

1. In a device of the class described, a platform, a hopper below the platform, said hopper having openings in its bottom at each side of its longitudinal center, a swinging door pivotally supported at the longitudinal center of the hopper bottom, downwardly inclined diverging chutes below the hopper and connected therewith, and a series of chutes below the inclined chutes, said inclined chutes being provided with swinging doors along their upper longitudinal edges.

2. In a device of the class described, a platform, a hopper below the platform, said hopper having openings in its bottom at each side of its longitudinal center, a swinging door pivotally supported at the longitudinal center of the hopper bottom, downwardly inclined diverging chutes below the hopper and connected therewith, a series of chutes below the inclined chutes, said inclined chutes being provided with swinging doors along their upper longitudinal edges, and means for operating the swinging doors.

3. In a device of the class described, a hopper having a bottom formed of downwardly inwardly converging inclined portions having openings along their lower longitudinal edges, a swinging door pivotally mounted at the longitudinal center of the hopper bottom, downwardly inclined diverging chutes below the hopper, said chutes being provided with openings at their upper longitudinal edges, and swinging doors mounted in said openings.

4. A device of the class described, comprising an elevated platform, two inclined floors below the platform intersecting along a horizontal line, openings in each floor on each side of the intersection, a single door adapted to alternatively control the upper openings, and respective doors for the lower openings.

5. A device of the class described, comprising two inclined floors meeting along a horizontal line and extending downwardly therefrom, sections of said floors being cut away adjacent to the line of meeting below the same, and each open section having a swinging door pivoted along the lower edge thereof and adapted to close it when desired.

ELI S. HART.

Witnesses:
ANNIE C. COURTENAY,
ANNA L. SAVOIE.