June 23, 1959 F. A. GIORI 2,892,106

COMMUTATOR DEVICE AND TIME INTERVAL SELECTOR

Filed June 16, 1958 2 Sheets-Sheet 1

Fig. 1.

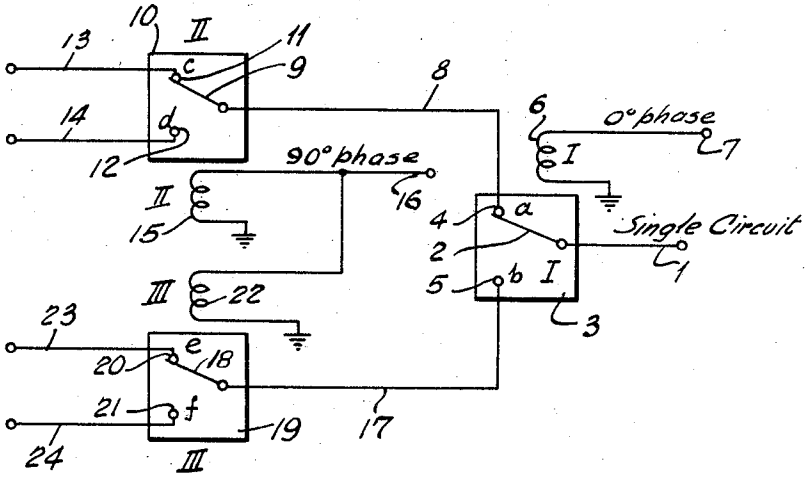


Fig. 2.

Contact Timing Diagram
for one complete cycle
contacts closed

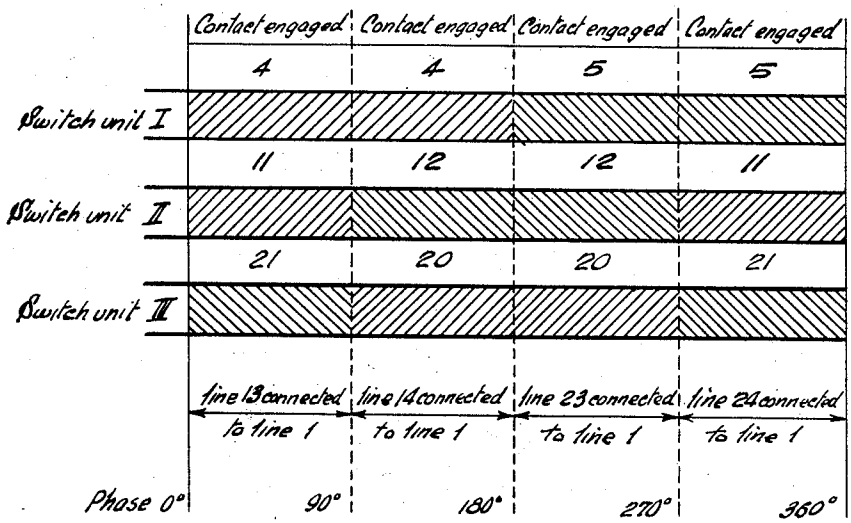


INVENTOR
BY FRANCIS A. GIORI

Lee J. Hunsberger
ATTORNEYS.

June 23, 1959 F. A. GIORI 2,892,106

COMMUTATOR DEVICE AND TIME INTERVAL SELECTOR

Filed June 16, 1958 2 Sheets-Sheet 2

Fig. 3.

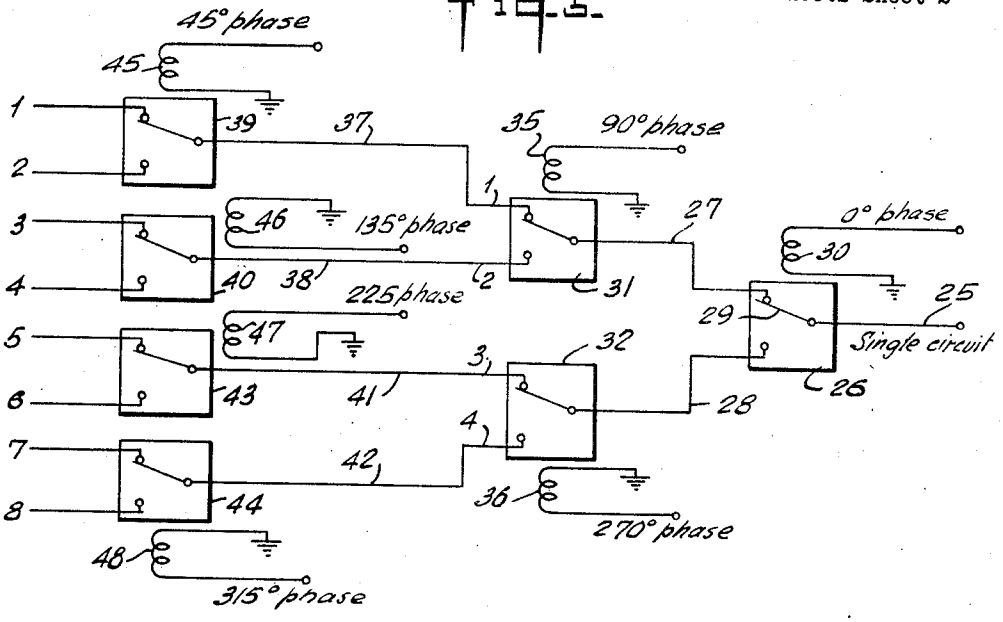


Fig. 4.

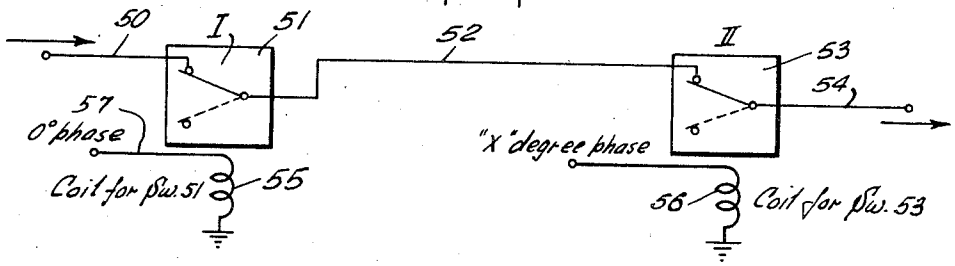


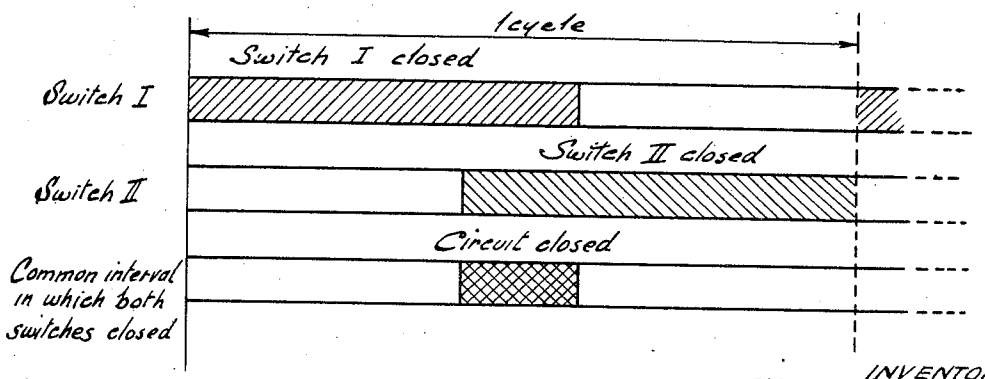


Fig. 5.

INVENTOR:
BY FRANCIS A. GIORI

Lee & Schmieberger
ATTORNEYS.

United States Patent Office 2,892,106
Patented June 23, 1959



2,892,106

# COMMUTATOR DEVICE AND TIME INTERVAL SELECTOR

Francis A. Giori, Clarence, N.Y., assignor, by mesne assignments, to the United States of America as represented by the Secretary of the Navy

Application June 16, 1958, Serial No. 742,453

6 Claims. (Cl. 307—132)

This invention relates to a sequential switching arrangement and method by which one circuit may be switched to any one or more circuits and the time interval duration of the connection to any of said one or more circuits selectively controlled. More particularly the invention includes a sequential switching arrangement and method by which one circuit may be switched in succession and individually to a plurality of secondary circuits, at a relatively high rate, through selective, relative phasing of the currents that individually operate the switches by which the sequential switching is accomplished.

An object of the invention is to provide apparatus by which a single circuit may be switched sequentially and at high speed into a plurality of different networks repeatedly in accordance with a selected pattern, with which a primary circuit may be connected at high speed repeatedly to a selected secondary circuit for a selected time interval that can be of very short duration, with which such time interval can be selectively adjusted, with which a desired signal can be selected from a group of signals occurring periodically, with which a single or primary circuit may be switched to any desired one of several circuits at a selected interval in a cycle, which will have maximum switching accuracy, which may be used as a high speed selector switch, with which there is no inherent drift, which will have high reliability and maximum life and requires no circuit adjustments, which eliminates the necessity of electronic tubes and associated circuit components in a high speed switching device, and which will be relatively simple, compact, practical, durable and inexpensive in construction.

Another object is to provide an improved method of repeatedly activating a selected circuit path at high speed during a selected time interval according to a selected cycle, and for varying the duration and position in each cycle of such activation, and which requires only relatively simple apparatus.

Other objects and advantages will be apparent from the following description of a few embodiments of the invention, and the novel features will be particularly pointed out hereinafter in connection with the appended claims.

In the accompanying drawings:

Fig. 1 is a schematic diagram illustrating one embodiment of the invention;

Fig. 2 is a chart showing the cycle details of the circuitry of Fig. 1;

Fig. 3 is another schematic diagram illustrating another embodiment of the invention;

Fig. 4 is a simple schematic diagram illustrating a subcombination of the circuitry of Fig. 1, and illustrating how the duration of activation of a particular circuit and its position in a cycle may be determined and varied in accordance with this invention; and

Fig. 5 is a chart or graph illustrating how the duration, and its position in a cycle of operation, of the activation of a circuit is determined in accordance with the circuitry of Fig. 4.



Referring first to the embodiment of the invention illustrated in Figs. 1 and 2, a single or primary circuit wire 1 is connected to the movable contact 2 of a primary switch 3, this switch having two spaced apart, fixed contacts 4 and 5 with which the switch arm 2 alternately engages as the movable switch arm moves back and forth in an oscillatory movement between them. This movable arm 2 is oscillated or vibrated back and forth between the fixed contacts 4 and 5 by a driving coil 6 connected at one end to a terminal 7 by which it may be connected to one terminal of one source of alternating current of a selected constant frequency, such as a 60 cycle alternating current for example. The other terminal of coil 6 is grounded, as is the other terminal of such source of alternating current. Devices of this type in which a coil that is activated by an alternating current operates a movable switch element alternately between spaced apart contacts at the frequency of such alternating current are available in the market and hence have been illustrated only diagrammatically.

The contact 4 is connected by a secondary wire 8 to the movable contact arm 9 of a secondary switch 10. This switch has spaced apart fixed contacts 11 and 12 to which are connected secondary circuit wires 13 and 14 respectively. Arm 9 is caused to vibrate or oscillate back and forth into engagement with contacts 11 and 12 alternately under the action of a driving coil 15 which is activated by another source of alternating current of the same frequency as that supplied to coil 6 of switch 3. For this purpose one end of coil 15 is connected to a terminal 16 by which it may be connected to such source of alternating current, the other terminal of coil 15 being grounded as is the other terminal of such another source of alternating current. This said another source of alternating current is displaced in phase from that of said one source of alternating current by some selected amount such as by 90°. This 90° displacement or difference in phase has advantages in that all of the secondary circuits from wires 13 and 14 will have uniform periods of activation by the switching.

Similarly, contact 5 of switch 3 is connected by wire 17 to the movable contact arm 18 of another secondary switch 19 which is caused to oscillate or vibrate alternately between fixed contacts 20 and 21 by a driving coil 22 that is similar to coil 15 and connected to terminal 16 and ground in parallel to coil 15. Secondary wires 23 and 24 lead respectively from fixed contacts 20 and 21. The switch 3 and its driving coil 6 may be considered collectively as a switching unit I, switch 10 and its driving coil may be considered collectively as a switching unit II, and switch 19 and its driving coil 22 may be considered collectively as switching unit III. Although in this example of the invention, only four final secondary channels or wires 13, 14, 23 and 24 have been illustrated, the number of secondary channels can be increased by adding additional switches operated by driving coils for each channel wire 13, 14, 23 and 24, and so on repeatedly within limitations imposed by phase drift and transit time. The number of switches in any case is one less than the number of final secondary lines.

In Fig. 1, the driving coils of switching units II and III are activated by a source of alternating current in quadrature phase with respect to the phase of the coil 6 of switching unit I, and the single line or circuit wire 1 is connected sequentially with each of the four secondary lines 13, 14, 23 and 24, and the cycle is repeated continuously. The contact diagram or graph shown in Fig. 2 will aid in understanding the actual operation, and should need no further explanation. During the first 90 degrees of a complete cycle of the coil 6, the switch arm 2 is in

contact with fixed contact 4 and consequently it is connected to switching unit II whose switch arm 9 is in contact with fixed contact 11. This completes a circuit between circuits or wires 1 and 13. During the next quarter cycle, the switch arm 2 remains in the same position but coil 15, which is activated by an alternating current that is displaced 90° in phase from the current activating coil 6 of switching unit I, operates switch arm 9 into engagement with contact 12 and consequently wire 1 is now connected to secondary line or wire 14. During the last half cycle of current in coil 6, the switch arm 2 is operated by the reversal of current in coil 6 into engagement with contact 5 of switch 1, and during this half-cycle interval, coil 22 causes switch arm 18 to oscillate between contacts 20 and 21 in the same manner that coil 15 oscillated switch arm 9 between contacts 11 and 12 of switching unit II in the first half-cycle. It is noted that the secondary wire of each switch becomes the primary wire of the next switch to which it is connected.

In the embodiment of the invention illustrated in Fig. 3, the same general circuit distribution arrangement between switches as that illustrated in Fig. 1 is followed, except that the distribution from the first or primary switch is to eight instead of four secondary lines or circuits, and the phase displacement of the alternating currents operating the various switches is different for each switch. The single or primary circuit or wire 25 is connected through switch 26 alternately to its secondary wires 27 and 28 as the movable arm 29 of switch 26 is oscillated or vibrated by coil 30 which is connected to and activated by a primary source of alternating current with a selected, uniform frequency, such as a 60 cycle A.C. supply in the same manner as explained for Fig. 1. Its phase we can consider as being 0°. The wires 27 and 28 are the primary wires of switches 31 and 32, similar to switch 26, and the movable contact arms 33 and 34 respectively of switches 31 and 32 are caused to oscillate or vibrate respectively by coils 35 and 36 in the same manner that arm 29 of switch 26 was caused to oscillate or vibrate.

The alternating current in coil 35 for switch 31 has a phase displacement of 90° from the current in coil 30, and the alternating current in coil 36 for switch 32 has a phase displacement of 270° from the current in coil 30. The movable switch arm in switch 31 connects the wire 27 alternately to wires 37 and 38 leading respectively to the movable contact arms of switches 39 and 40. Similarly, the movable switch arm in switch 32 connects the wire 28 alternately by wires 41 and 42 respectively to the movable arms of switches 43 and 44. Each of the switches 39, 40, 43 and 44 has two fixed, spaced apart contacts, each connected to a secondary line or circuit.

A coil 45 causes vibration or oscillation of the movable switch arm of switch 39 to connect the primary wire 37 of switch 39 alternately to its two distribution secondary lines. This coil 45 is supplied with an activating or operating alternating current of the same frequency as that supplied to coil 30, but having a phase displacement of 45 degrees from the phase of the current that activates coil 30. A coil 46 causes vibration or oscillation of the movable contact arm of switch 40 to connect wire 38 alternately to two distribution wires of that switch. This coil 46 is supplied with an activating alternating current having the same frequency as that of the primary alternating current that activates coil 30, but having a phase displacement of 135° from the phase of the primary current supplied to coil 30.

A coil 47 causes vibration or oscillation of the movable contact arm of switch 43 to connect wire 41 alternately to two distribution wires of that swich. This coil 47 is supplied with an activating alternating current having the same frequency as that of the primary alternating current that activates coil 30 but having a phase displacement of 225° from the phase of the primary current supplied to coil 30. A coil 48 causes vibration or oscillation of the movable contact arm of switch 44 to connect wire 42 alternately to two distribution wires of that switch. This coil 48 is supplied with an activating alternating current having the same frequency as that of the primary alternating current that activates coil 30 but having a phase displacement of 315° from the phase of the primary current supplied to coil 30.

It is desirable to have the alternating currents that are supplied to coils 30, 35, 36, 45, 46, 47 and 48 all of the same uniform frequency, but merely having selected phase displacements from the phase of the primary current supplied to coil 30, but the frequencies could be different, if desired, in which case it would make rather involved the distribution connections to the various eight secondary circuits in order to obtain a selected pattern of activation of these secondary circuits. Variations of both frequencies and phases of the currents supplied to the various driving or switch operating coils according to a selected plan may have some utility in a message scrambling and unscrambling system.

The embodiment of the invention illustrated in Fig. 4 employs a circuit for an inverse operation that provides a selected electrical path only during a selected time interval as determined by the driving or switch operating coil phasing. As illustrated in Fig. 5, diagramming the contact timing, a primary circuit 50 is connected through switch 51 to an intermediate circuit 52 that in turn is connected through a switch 53 to a secondary circuit 54. Both switches 51 and 53 are similar to switch 3 of Fig. 1 in each of which a movable contact arm is caused to vibrate or oscillate alternately between spaced apart fixed contacts by coils 55 and 56 respectively that receive activating alternating currents of the same uniform frequency, such as of a 60 cycle per second frequency for example.

The current is supplied to coil 55 from a suitable source, not shown, through a terminal 57 that is connected to one end of coil 55, the other terminal of coil 55 being grounded for completion of the circuit to the source of the current. The phase of the current supplied to coil 55 may be considered, for convenience, as 0°. The coil 56 is similarly connected at one end to a terminal 58 and at its other end to ground, through which the activating alternating current is received from a suitable source, not shown. The phase of the alternating current supplied to coil 56 may be designated as of "X" degrees phase, which is different from the phase of the current supplied to coil 55 by any selected extent, depending upon the place in the cycle and the duration that one desires to have the circuit 54 activated.

With the switches 51 and 53 being operated by the coils 55 and 56, current will pass from circuit 50 to circuit 54 only when both switches 51 and 53 have selected relative closed positions, and since there is a difference in phase of the alternating currents activating the switch operating coils, the parts of the cycle at which the two switches are closed or connect together, the circuits 50 and 54 will be only a fraction of a cycle. This fraction will vary with the difference in phase. This is illustrated graphically in Fig. 5 in which in the top graph the closed and open positions of switch 51 in a single cycle of operation are illustrated. In the next lower graph the closed and open positions of switch 53 in a single cycle of operation are illustrated.

It will be noted that these two graphs demonstrate that there is a period in each single cycle of operation in which both switches are closed, and that period is demonstrated in the third graph line from the top. From this it will be seen that by varying the phase displacement of the alternating current supplied to one coil from that of the current supplied to the other coil, one may adjust the overlapping fractions of the switch closed periods and thus determine and control the duration of time or fraction of each cycle of operation of the switches 51 and 53 during which a circuit will be completed between circuits 50 and 54.

Phase drift and transit time place a lower limit of about one-sixteenth of a complete cycle period on the length of time interval that can be switched with this circuit arrangement. A sharper annd more precise selection of an interval in a cycle can be achieved by a circuit employing three coil operated switches connected in series in the circuit and with two of them operating at the frequency of data transmission rate, and the other one operating at an integral multiple of this frequency.

It will be apparent from the foregoing explanation that this invention is useful in electronic computing and display circuits, or other circuits requiring very rapid switching, without the use of electronic tubes and circuits for accomplishing this switching. With this invention it is also possible to select one desired signal from a group of signals occurring periodically and to switch a single circuit to any desired one of several circuits at a selected interval in a cycle. Increased switching accuracy may be realized by operating certain of the coil-operated switches in the array at multiples of the basic cycling frequency.

It will be understood that various changes in the details and arrangements of parts and circuits, and in the selection of the frequencies and phase displacements, which have been herein described and illustrated in order to explain the nature of the invention, may be made by those skilled in the art within the principle and scope of the invention as expressed in the appended claims.

I claim:

1. A commutator device for switching a single circuit sequentially at a high rate, among a plurality of circuits, which comprises a primary switch having a movable contact for connection to said single circuit and two spaced apart fixed contacts with which said movable contact is engageable alternately, a pair of secondary switches, each having a movable contact and two fixed contacts with which the movable contact of that switch is engageable alternately, the movable contact of one of said secondary switches being connected to one fixed contact of said primary switch, the movable contact of the other one of said secondary switches being connected to the other fixed contact of said primary switch, the fixed contacts of said secondary switches being connectable to said plurality of circuits, means responsive to one controlling alternating current having a selected frequency and operating said movable contact of the primary switch alternately between engagement with its said fixed contacts at every cycle of said controlling current, and means responsive to a controlling alternating current of the same frequency which is displaced in phase from said one controlling current and operating said movable contact of said secondary switch repeatedly at said selected frequency.

2. The device as set forth in claim 1 wherein the displacement in phase is 90°.

3. A commutator device for switching a single circuit to provide a selected electrical path during a selected time interval, which comprises a primary switch and a secondary switch, each having two positions, means by



which said primary switch can be connected to said single circuit, means by which said secondary switch may be connected to an output circuit, means connecting said switches in series by which said primary switch as it operates connects and disconnects said single circuit to said secondary switch, and the secondary switch as it operates connects and disconnects said primary switch to said output circuit, means responsive to one controlling alternating current having a selected frequency and operating said primary switch to alternately and repeatedly connect and disconnect said single circuit with said secondary switch at a rate determined by said frequency, and means responsive to a controlling alternating current of the same frequency as said one controlling current, which is displaced in phase a selected amount from said one controlling current, and operating said secondary switch repeatedly at said selected frequency, whereby said output circuit will receive current from said single circuit only during a selector time interval.

4. A commutator device for switching a single circuit sequentially at a high rate between a plurality of circuits, which comprises a primary switch and a plurality of secondary switches, each such switch being operable to connect its primary circuit alternately to two secondary circuits, said primary switch being operable to connect its primary circuit alternately to the primary circuits of a pair of secondary switches, each of such pair of secondary switches being operable to connect its primary circuit alternately to the primary circuits of further secondary switches forming a group, means responsive to one controlling alternating current having a selected frequency and operating said primary switch to alternately and repeatedly connect its primary circuit to said primary circuits of said pair of secondary switches at a rate equal to said frequency, means responsive to controlling alternating currents of the same frequency as said one current and operating each of said pair of switches repeatedly at said frequency rate, means responsive to controlling alternating currents of the same frequency as said one current and operating each of the other secondary switches repeatedly at said frequency rate, said controlling currents after said one current having phases which are displaced from the phase of said one current.

5. The device as set forth in claim 4, wherein said phase of the first controlling current after said one current is displaced 90° from that of said one current.

6. The device as set forth in claim 4, wherein said phase of the first controlling current after said one current is displaced 90° from the phase of said one current for one of said first pair of secondary switches and 270° from the phase of said one current for the other of said first pair of secondary switches, said phases of the controlling currents for said switches of said group being displaced differently from one another and differently than the phase of said one controlling current, and being respectively displaced 45°, 135°, 225° and 315° from the phase of said one controlling circuit.

No references cited.