G. CRAWFORD.

Adjustable Ladder.

No. 197,766. Patented Dec. 4, 1877.

Fig. 1

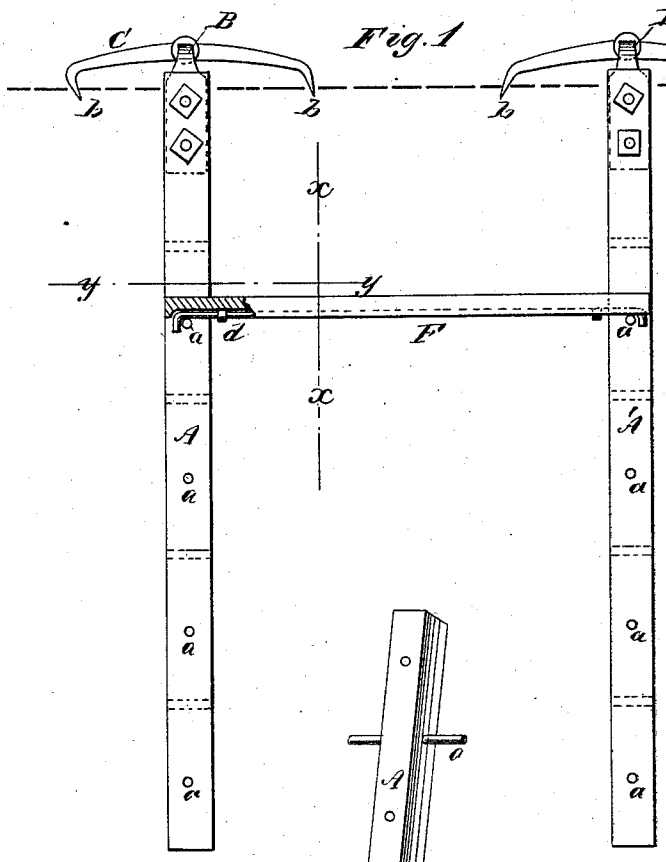

Fig. 2

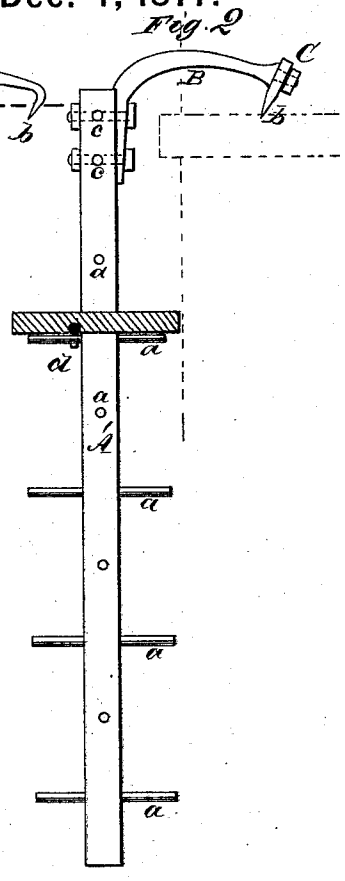

Fig. 4

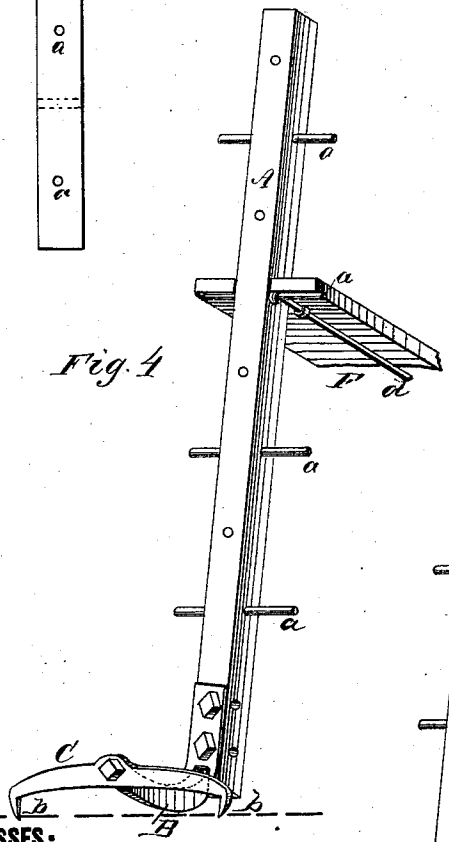

Fig. 5

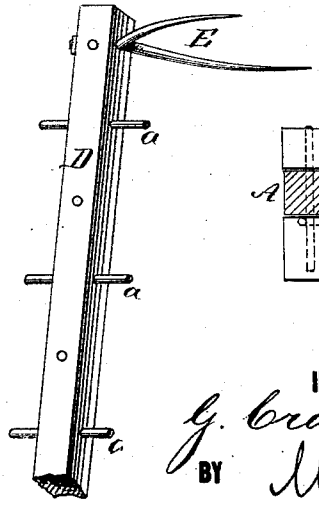

Fig. 3

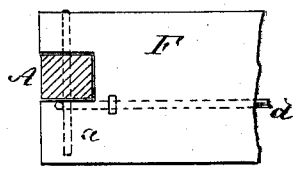

WITNESSES:

A. W. Strongvist

J. H. Scarborough.

INVENTOR:

G. Crawford.

BY Munn & Co.

ATTORNEYS.

N. PETERS, PHOTO-LITHOGRAPHER, WASHINGTON, D. C

UNITED STATES PATENT OFFICE.

GEORGE CRAWFORD, OF NAPOLEON, OHIO.

IMPROVEMENT IN ADJUSTABLE LADDERS.

Specification forming part of Letters Patent No. **197,766**, dated December 4, 1877; application filed September 29, 1877.

To all whom it may concern:

Be it known that I, GEORGE CRAWFORD, of Napoleon, county of Henry, and State of Ohio, have invented a new and Improved Adjustable Ladder, of which the following is a specification:

Figure 1 is a front elevation of my improved ladder. Fig. 2 is a vertical section taken on line *x x* in Fig. 1. Fig. 3 is a horizontal section on line *y y* in Fig. 1. Fig. 4 is a perspective view of the ladder, and Fig. 5 is a detail view of the upper end of a rod used in stacking hay.

Similar letters of reference indicate corresponding parts.

The object of my invention is to provide a ladder which may be suspended and employed as a support for a scaffold for the use of painters, carpenters, and others, and may be placed upon the ground and employed in stacking grain, picking fruit, &c.

In the drawing, A is a bar of wood, bored transversely at regular intervals, to receive iron rods or rounds *a*, which project equally on each side of the bar.

The bar A′ is also bored between the rods *a*, and at right angles to them, for receiving the rounds or rods *a*, similar to the bar A.

At one end of each of the bars A A′ a curved arm, B, is bolted, to the outer end of which a cross-bar, C, is pivoted. This cross-bar is provided with a spur, *b*, at each end, both of which project from the same side.

Holes *c* are bored through the bars A A′, at right angles to those through which the bolts pass, for fastening the arms B, so that the said arms may be shifted on the bars, as shown in Fig. 4.

D is a bar having rods *a* and intermediate transverse holes, as in the case of the bars A A′. It is also bored transversely at right angles from two directions at the end, to receive the fork E.

F is a plank having a rectangular notch cut in each end for receiving the bars A A′, and is provided with a rod, *d*, hooked at each end to engage the rods *a*.

When the device is employed as a hanging scaffold, two of the bars A are used, and the spurs at the ends of the cross-bars C engage some portion of the building upon which the device is used. The plank F is supported by the two bars, and the hooks formed on the rod *d* prevent the plank from slipping from the rods *a*.

When the ladder is used in stacking hay or grain, the arm B is shifted so that it projects at right angles to the rods *a*. The spurs of the pivoted cross-bar C are, in this case, driven into the ground, and effectually prevent the ladder from slipping. The plank F may be used in connection with two ladders placed in this position.

When the ladder is used in stacking hay, the bar D, having the fork E, is connected with the bar A by inserting its rods *a* in the intermediate holes in the said bar, and the fork may be inserted in the stack to steady and support the ladder.

The bar C, being pivoted, can adapt itself to any surface, and will therefore readily conform to the eave or gable end of a building, whether horizontal or inclined, thus enabling me to do away with the ordinary toothed arm.

Having thus fully described my invention, I claim as new and desire to secure by Letters Patent—

1. The curved arm B and pivoted bar C, having spurs *b*, in combination with the bar A′, having the transverse rods *a*, substantially as herein shown and described.

2. The notched plank F, having the hooked rod *d*, in combination with the ladders consisting of the bars A A′ and rods *a*, substantially as shown and described.

GEORGE CRAWFORD.

Witnesses:
F. A. WOODWARD,
C. WOODWARD.