Nov. 7, 1967 F. L. SCHULTZ 3,350,988

METHOD OF MAKING CONTINUOUS FORM ENVELOPES

Original Filed June 23, 1961 2 Sheets-Sheet 1

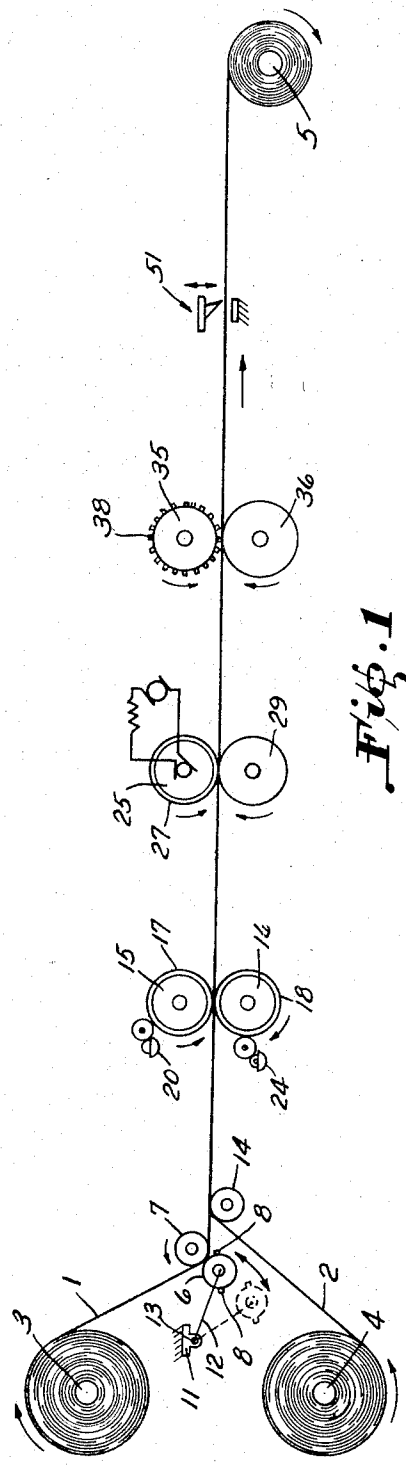

Fig. 1

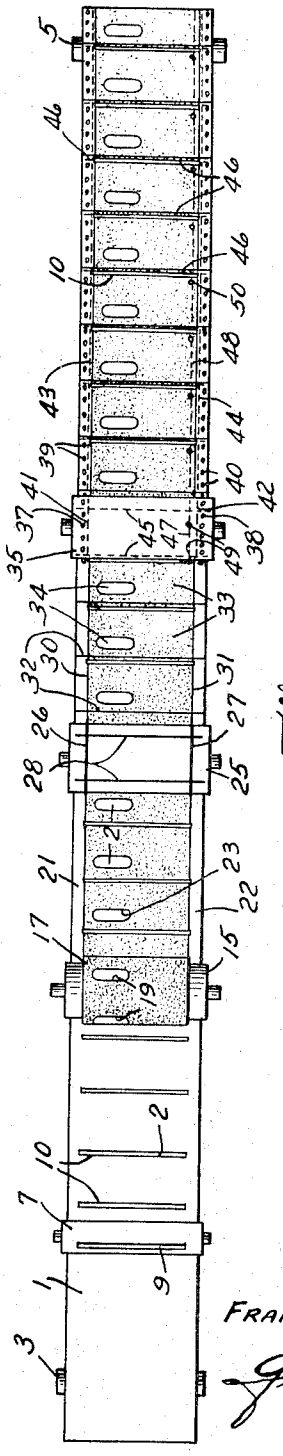

Fig. 2

INVENTOR
FRANK L. SCHULTZ
Glenn E. Wise
AGENT

Nov. 7, 1967 F. L. SCHULTZ 3,350,988

METHOD OF MAKING CONTINUOUS FORM ENVELOPES

Original Filed June 23, 1961 2 Sheets-Sheet 2

Fig. 3

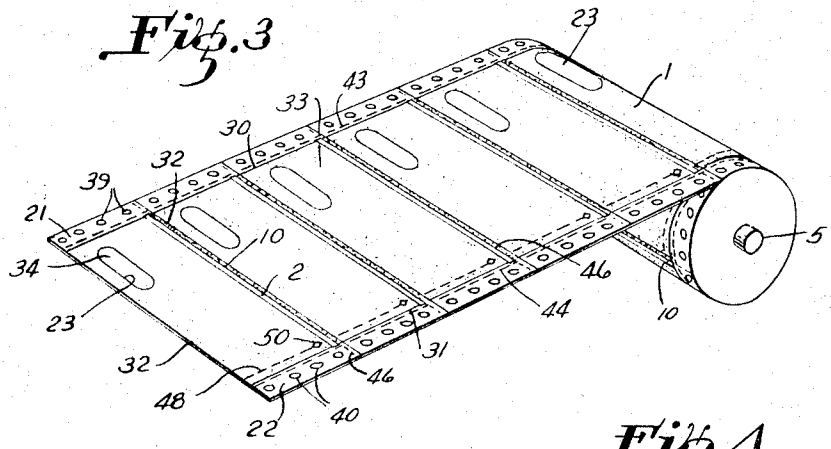

Fig. 4

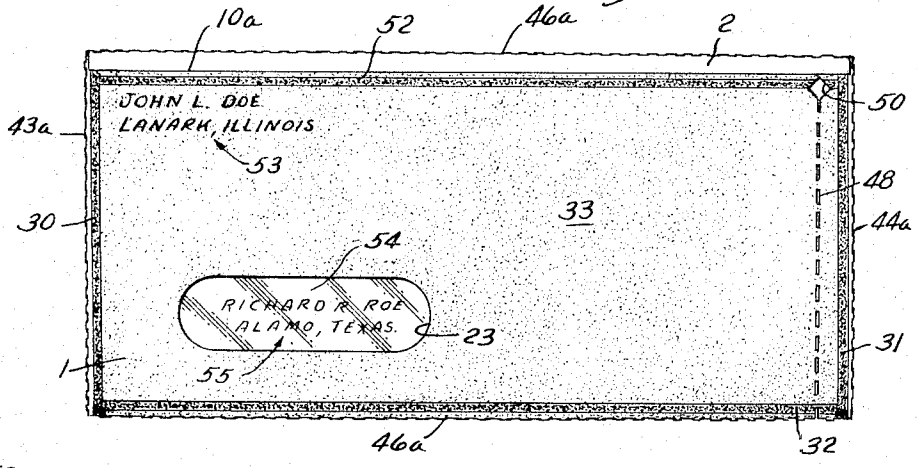

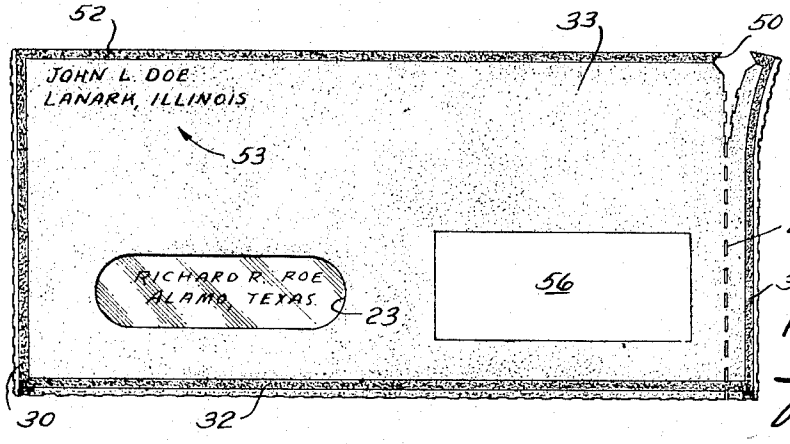

Fig. 5

INVENTOR
FRANK L. SCHULTZ
Glenn E. Wise
AGENT

United States Patent Office 3,350,988
Patented Nov. 7, 1967

3,350,988

METHOD OF MAKING CONTINUOUS FORM ENVELOPES

Frank L. Schultz, P.O. Box 253,
Alamo, Tex. 75119

Original application June 23, 1961, Ser. No. 119,176, now Patent No. 3,140,816, dated July 14, 1964. Divided and this application June 30, 1964, Ser. No. 379,127
20 Claims. (Cl. 93—61)

This invention pertains to continuous form stationery, and more particularly to a method of making strip-type, series connected mailing envelopes. This application is a division of my co-pending application Ser. No. 119,176 filed June 23, 1961, and entitled "Continuous Form Envelopes," now U.S. Patent Number 3,140,816.

Modern commercial requirements have led to the development of various types of stationery in continuous strip form which may be fed through a typewriter or other imprinting, addressing or recording machine without the necessity of repetitious insertion of individual units. After appropriate inscription or other machine operation, the series-connected units are divided from the supply strip along transverse weakened lines.

Prior to this invention, as far as I am able to determine, all practical mailing envelopes of the continuous form type have been made of untreated paper, paper and foil laminates, or coated paper. No successful continuous envelope of the type in question, to my knowledge, has been formed by utilizing as the envelope stock or body material initially transparent heat-sealable thermoplastic film material. (Throughout the remainder of this application, the term "initially transparent" is defined to mean that the stock or body material used in forming the envelopes of the invention is transparent or substantially transparent at the beginning of the envelope-making process, prior to certain operations, to be described, subsequently performed on the stock or body material which alter its transparency.) This is true even though the economic merits of certain heat-sealable thermoplastic film materials, for example, polyethylene webbing, versus paper have long been known. The main reasons that plastic film materials have not been adopted for use in making envelopes for mailing purposes appear to be: (1) because the films as normally received from the producer do not take printing or individual addressing well, that is, most printing, and especially typewriting, imposed thereon either does not adhere at all, or smears or offsets to varying degree in handling due mainly to the smoothness of the film's surface, (2) because the films are normally transparent, as received, and users usually desire to have their mailing covers for various classes of mail to be non-transparent to some extent. For example, users normally desire to have their First Class mail enveloped in substantially opaque material except in those instances where windowed envelopes are desired, and (3) because, due to their flexibility, plastic webs are more difficult to process and handle than paper which is normally less flexible.

This invention, however, overcomes all of these main objections and provides an envelope formation wherein thermosensitive plastic film, after certain operations are performed thereon, is rendered highly suitable for mailing covers. This desirable result is achieved by superimposing in contacting relationship two webs of thermoplastic, heat-sealable film, of a width slightly greater than the completed envelopes are to be, preferably, but not necessarily, after certain cut-outs (for facilitating later stuffing or filling of the envelopes with mailing matter) are formed in one of the webs. Next, the exterior or non-contacting surface of either or both webs is partially or completely coated with a flat or semi-gloss ink of a type

which will adhere to such film so as to render the webs at least translucent to the extent required by postal regulations for the various classes of postal matter. (The term "at least translucent" is defined throughout the remainder of this application to mean that, subsequent to the coating operation, the light-passing capabilities of the initially transparent or substantially transparent stock or body material is diminished sufficiently, by the coating applied thereto, to render the coated stock material either translucent or opaque.) This ink coating also serves the additional function of providing a base to which additional printed, typed or stamped impressions will readily adhere, as well as providing a medium for forming artistic representations. After this coating operation, the superimposed webs pass through a heat sealing device which, by heating selected portions of the webs, causes the webs to be fused together so as to form individual envelope compartments. Next the joined webs are passed through a perforating and punching device which provides machine-feeding means along the marginal edges of the webs as well as forming means facilitating later removal of these marginal edges from the finished continuous envelope strip and for detaching adjacent individual envelopes one from the next. (Optionally, if the finished envelope strip is to be friction fed, as on a standard typewriter, the marginal machine feeding means may be omitted.) The punching and perforating device also concurrently forms means whereby individual envelopes may be easily opened by the ultimate addressee, these means including air venting means which allow excess air to escape from the individual envelopes during stuffing and sealing operations, i.e., when material to be mailed is being inserted into the envelope and then sealed. After the perforating and punching operation, the strip of envelopes is ready for use in high-production business addressing, printing, stamping and the like equipment, and may be shipped to the user in either rolled or accordion-folded (zig-zag) form.

At the point of use one end of the envelope strip is inserted into a business machine of the type aforementioned, e.g., a typewriter, and is fed positively into the machine by means of the marginal feeding means provided on the envelope strip margins. At this juncture, any desired typing or printing is impressed upon the original ink coating, after which the individual envelopes may be detached from each other for individual manual or machine stuffing or left in strip form for manual or machine stuffing and then detached for final sealing and then mailing. A description of the final sealing technique will follow.

One object of the invention is to set forth a method of manufacturing continuous series-connected detachable envelopes whereby they may be more economically manufactured than heretofore.

Another object of the invention is to set forth a method of making a continuous strip of series-connected envelopes formed of heat-sealable plastic film material previously considered unsuitable for forming exterior mailing covers.

Another object of the invention is to provide a method of preparing plastic film whereby it is rendered acceptable for mailing covers, whereby it is rendered acceptable as a base for receiving printing, typing, and the like, and whereby stuffing means are provided.

Another object of the invention is to provide a method for making same a continuous form envelope assembly having means to facilitate stuffing operations, which means include air venting provisions for sealing as well as a cut-back entry to the interior of each individual envelope.

Another object of the invention is to provide a method of making a plastic envelope having means whereby it may be easily opened when received by the addressee,

and wherein a portion of the opening means serve as a means for venting excess air from the interior of an envelope as it is being filled with mailing matter and sealed.

Another object of the invention is to set forth a method of forming a strip of continuous series-connected envelopes of thermoplastic, heat-sealable material.

Another object of the invention is to provide a method of making a window-type continuous series-connected envelope assemblage formed entirely of coated thermoplastic material.

With the above primary and other objects in view as will more fully appear in the remainder of the specification and claims, the invention intended to be protected by Letters Patent consists of the method of manufacture or its equivalents hereinafter described and illustrated in the accompanying drawings.

In the drawings, which form a part of this application, there is illustrated an apparatus for producing, by the method set forth herein, window-type series-connected envelopes suitable for First Class mail covers. The illustrated embodiment is the preferred, but obviously not necessarily the only apparatus suitable for carrying out the method of this invention:

FIGURE 1 is a schematic elevational view illustrating a method of making the continuous form envelopes of the invention as well as an apparatus to carry out the aforesaid method;

FIGURE 2 is a schematic plan view of the arrangement of FIGURE 1;

FIGURE 3 is a three-dimensional view showing a roll of my continuous series-connected envelopes, produced by the method set forth herein, ready for feeding into a business machine for final printing or stamping or the like;

FIGURE 4 is a view showing a single envelope after it has been detached from the strip of FIGURE 3 and stuffed, and after its top has been sealed but prior to a final trimming operation; and

FIGURE 5 is a view showing a single envelope as it would appear when partially opened by an addressee.

Referring now to FIGURES 1 and 2 of the drawings of reference numerals, there is seen in schematic form the apparatus for making continuous form window-type mailing envelopes by the preferred method of my invention. More specifically, continuous, equal-width, vertically aligned webs **1** and **2** of transparent, heat-sensitive, thermoplastic material (preferably polyethylene) are mounted on reels **3** and **4**, respectively, from which the webs are continuously drawn by a rotatably driven take-up reel **5**. Shortly after being drawn from reel **3**, web **1** preferably passes between a pair of rotatably driven die-cutting rollers **6** and **7**. Roller **6** is the male member of the pair and carries on its periphery a plurality of radially protruding die portions **8**, **8** which cooperate with coacting conventional female die depressions **9** in roller **7** to form transversely extending, elongated, spaced rectangular cut-outs **10**, **10** in web **1** as it passes between rollers **6** and **7**. Cut-outs **10** aid in facilitating stuffing as will later be described. Male roller **6** is preferably mounted so that it may be moved away from roller **7** when cut-outs **10** are not desired in the finished envelopes, and for this reason, roller **6** is diagrammatically shown in FIGURE 1 to be supported from a fixed support **11** by means of an arm **12** pivoted at **13** to support **11** whereby the roller **6** may be swung to the dotted line location shown. After cut-outs **10**, **10** are formed, web **1** moves away from rollers **6** and **7** substantially horizontally oriented. Simultaneously, web **2**, shortly after being drawn off reel **4**, at the same lineal speed as web **1**, passes over guide roll **14** where its upper surface is brought into full width contact with the lower surface of web **1**. Web **1**, which now contains cut-outs **10**, and web **2** now continue in contacting relationship through upper and lower rotatably driven printing rollers **15** and **16** which carry impression surfaces **17** and **18**, respectively, the web-engaging peripheries of which are made to travel at the same speed as the lineal speed of webs **1** and **2**. Impression surface **17** having non-printing areas **19** receives an ink supply from a reservoir **20** by means of conventional intermediate transfer rollers, as shown, and in rotating coats the entire upper surface of web **1**, except the marginal areas **21** and **22** and the window areas **23** with a layer of polyethylene-adherent ink, which renders the coated portion of web **1** translucent or opaque as desired by an individual user. Concurrently, impression surface **18** receives an ink supply from a reservoir **24** by means of conventional intermediate transfer rollers, as shown, and functions to coat, with an ink identical to that being applied to web **1**, the entire lower surface of web **2** except for marginal edge areas (not shown) coextensive with areas **21** and **22** of web **1**, which are left uncoated. No window areas are formed in the coating on web **2**.

Areas **21** and **22**, and the identical marginal areas on web **2** are not ink coated for reasons of economy since the web portions containing these marginal areas are later removed and discarded and do not form any part of the ultimate individual envelopes produced by the practice of this invention.

One polyethylene-adherent ink which I have found to be suited for use in coating webs **1** and **2** as described is flat or semi-gloss ink produced by the Interchemical Corporation of Chicago, Ill. I have further found that, although either the flat or semi-gloss ink gives satisfactory results in rendering the webs **1** and **2** at least translucent where applied, the flat ink takes typing impressions better, i.e., typed printing will adhere more tenaciously and will thus produce more lasting and legible results when impressed on the flat ink. This is especially important when addresses or the like are to be impressed on the coatings by means of typewriters or addressing machines.

Proceeding from the coating station, the webs, still in superimposed contacting relation, travel a distance sufficient to allow the ink coatings, previously described, to dry and then pass into a heat-sealing device between heat-sealing roller **25**, having raised, preferably electrically heated, web contacting portions **26**, **27** and **28** on the periphery thereof, and a back-up roll **29** directly beneath the roller **25**. The web contacting portions of roller **26** and roll **29** are rotatably driven at the same speed as the lineal speed of the webs **1** and **2**, and as heated portions **26** and **27** contact web **1**, they cause the immediately subjacent plastic material to soften and fuse together along very narrow interrupted (by cut-outs **10**) heat seal lines **30** and **31** which extend longitudinally of the webs **1** and **2**, preferably, but not necessarily, coincidental with the edges of the coated portions of the webs. Concurrent with the formation of heat seal lines **30** and **31**, heated web contacting portions **28**, **28** contact web **1** and in like manner form very narrow, spaced transverse heat seal lines **32**, **32** completely across webs **1** and **2**, these latter lines being provided to form the bottom edges of the individual envelopes in my series-connected structure and being positioned away from the windows **23** a distance equivalent to that usual in conventional, paper windowed envelopes. Continuity and integrity of all the heat seal lines is insured by the squeezing action of portions **26**, **27** and **28** coacting with roll **29**, between which webs **1** and **2** are pressed together as the seal lines are being formed.

At this stage in the process, by means of the seal lines **30**, **31** and **32**, webs **1** and **2** are joined together into a unitary laminated strip for the first time. As a matter of descriptive convenience joined webs **1** and **2** will henceforth, for the remainder of this description, be termed a strip.

Moving away from the heat sealer, the strip, as seen in FIGURE 2, includes a plurality of spaced envelope fronts **33**, **33** and a plurality of envelope backs **34**, **34** (as seen through transparent windows **23**, **23** in fronts **33**, **33** in FIGURE 2) defined by heat seal lines **30**, **31** and **32**.

It will be noted that, at this stage of the process, it would be possible to insert mailing material between a

front 33 and a back 34 by way of a cut-out 10 in each front 33 if such were desirable. In practice, however, no material is inserted at this juncture.

The strip now enters a punching and perforating device, composed of a male punching and perforating roll 35 and a female punch-receiving and backup roll 36, and passes between rolls 35 and 36. These two rolls 35 and 36 are rotatably driven in synchronism with the strip. Roll 35, near each end thereof, carries a row of round radially extending punches 37 and 38, respectively, which as the roll rotates form a plurality of evenly and longitudinally spaced circular holes 39 and 40 between the opposite marginal edges of the strip and the two longitudinally extending heat seal lines 30 and 31. These holes 39 and 40 form machine-feeding means whereby my finished envelope strip may later be positively drawn into a conventional pin-feed-including typewriter or similar business machine for additional processing. Roll 35 also carries, at both ends thereof, a row of radially extending perforating knives 41 and 42, respectively. These rows of knives are spaced slightly toward the center of the roll from the rows of punches 37 and 38 and are parallel thereto. As roll 35 rotates, knives 41 and 42 form a line of spaced perforations, 43 and 44 respectively, through each edge of the strip just outside of heat seal lines 30 and 31. The perforation lines 43 and 44 provide a means whereby the machine-feeding-means-including marginal edges of the strip may be detached from the remainder of the strip after they have served their purposes as hereinabove described.

Roll 35, in addition to the previously mentioned punches and knives, carries a plurality of rows of perforating knives 45, 45. Rows 45 extend parallel to the longitudinal axis of roll 35 and radially from the periphery of the roll. As roll 35 rotates, knives 45 are positioned so as to form transversely oriented rows of spaced perforations 46, 46, through and substantially across the strip immediately behind each envelope's bottom-closing heat seal lines 32, 32, at a location, in this preferred embodiment, coincident with the leading edges of cut-outs 10, 10. It will be obvious that rows 46 thus provide means whereby individual envelope units may be detached from the strip. The individual slits which combine to form the rows of perforations 46, 46, it will be noted, do not communicate with the machine-feeding holes 39 and 40, nor does any end slit extend to a margin of the strip. Thus the pin feed holes are not weakened or mutilated by perforations 46, nor is the strip itself weakened at its edge to the extent that it might accidentally rip transversely during further processing.

Roll 35 further carries a row of radially extending perforating knives 47 spaced somewhat toward the center of the roll 35 from and parallel to the row of knives 42. The purpose of the row of knives 47 is to form, as roll 35 rotates, a longitudinally extending line of spaced perforations 48 through the strip at a location approximately one-half inch inside of and parallel to the heat seal line 31. Line 48 forms a part of a novel envelope opening means which will be further defined as the description proceeds.

The final strip-treating means carried by rolls 35 is a plurality of spaced, square punches 49, 49 which extend radially from roller 35 on the same line defined by the row of knives 47. As roll 35 rotates, punches 49, 49 are positioned so as to form punched holes 50, 50 in the strip on line with perforations 48 but spaced slightly behind the bottom or trailing edge of cut-outs 10, 10. Each hole 50 not only forms an air release vent of great importance during stuffing and top sealing of individual envelopes, but also is in communication with one of the individual perforations which form perforated line 48 for a purpose which will be more fully described hereinbelow.

The roll 36 is provided with the female indentations necessary to coact with the various punching and perforating elements on roll 35, as is conventional.

After leaving the punching and perforating device, the strip of envelopes winds up on take-up reel 5 and is ready for shipment to a user. Although I prefer to ship my strips of series-connected envelopes in roll form, the strips may also be shipped in conventional accordion folded or zig-zag fashion or, optionally, by employing a cut-off device, as generally and diagrammatically illustrated at 51 in FIGURE 1, the strip may be completely transversely severed along each transverse perforated line 46 and the individual envelopes, after detachment, may be shipped to a user in any manner deemed desirable. (In this latter case, the strip would be made without the pin-feed margins.)

Timing of the various operating units which form the production line illustrated in FIGURES 1 and 2 may be controlled by a plurality of conventional individual synchronizing devices, one controlling each unit, or all of the units may be positively connected together by appropriate gearing and shafting. (Or, optionally, the various operations may be completely independent of each other and be completed at different times.)

Referring now to FIGURE 3, there is seen a roll of my series-connected envelopes ready to be inserted into a pin-feeding type business machine for further processing, for example, for typing or printing return addresses in the upper left-hand corner of each envelope. The pins of the pin feed of such machines protrude successively into holes 39 and 40 at the opposite margins of my envelope strip to draw the strip into the machine as desired by an operator. After each individual envelope, beginning with the end unit, has been typed or printed upon, or otherwise additionally processed, it may either be detached from its neighbor along a perforated line 46, either before or after stuffing, after which the uncoated margins are removed from the envelope edges along the perforated lines 43 and 44, respectively, or the strip may be kept whole for shipment elsewhere for later detachment and then stuffing, or stuffing and then detachment. Detachment and margin removal can be done by hand or on a conventional "burster" machine such as those sold by Moore Business Forms, Inc.

If the individual envelopes which comprise my envelope strip are stuffed with mailing material prior to their detachment one from another, such material would be inserted in between the fronts 33 and backs 34 by way of the cut-outs 10 provided for this purpose. During the stuffing operation, any excess air within a particular envelope not exhausted through a cut-out 10 would find its way out through a hole 50.

Cut-outs 10 are made as long as possible within the limits prescribed by perforated lines 43 and 44. That is, the cut-outs do not extend to the locus of these lines of perforations, but end just short thereof, slightly beyond heat seal lines 30 and 31.

If the envelopes are detached each from the others, along the perforated lines 46, prior to stuffing, then, since lines 46 are in every instance in the illustrated embodiment coincident with the top edge of the cut-outs 10, such detachment leaves the entire top of each envelope between heat seal lines 30 and 31 open for stuffing purposes.

To proceed, however, whether the individual envelopes are stuffed and then detached, or detached and then stuffed, any one of the envelopes after stuffing, detachment, margin removal and top sealing would appear as seen in FIGURE 4.

In FIGURE 4, the numerals 43*a*, 44*a* and 46*a* denote the envelope-attached ragged remains of perforation lines 43, 44, and 46 after the margins 21 and 22 have been detached from the envelope and after this envelope has been detached from the strip. (Some conventional "bursters" are designed to trim margins 43*a* and 44*a* "clean" or straight also, but such case is not illustrated herein.) Numeral 33 again denotes the front face of the envelope which is opaque with the exception of the transparent, uncoated window-forming portion 23. The numeral 10*a* denotes what now remains of cut-out 10. Numerals 30,

31 and 32 denote, respectively, the envelope's left, right and bottom edge heat-seal lines. Numeral 52 represents a seal line sealing the top of the envelope. Preferably, seal line 52 is formed by a conventional edge heat sealer to form a narrow seal line similar to lines 30, 31 and 32. However, to adapt this envelope for household as well as commercial usage, a line of conventional "moisten and seal" adhesive (not shown) may be deposited on the inner side of either or both webs, coincident with the location of seal line 52 as seen in FIGURE 4, whereby the envelope may be top-sealed merely by wetting the adhesive and pressing the tops of front 33 and back 34 together. Numeral 50 again denotes the air vent hole which, in addition to serving as a vent, communicates with one of the individual slits of perforation line 48 thus forming a tear-starting means for my novel opening features. By locating hole 50 and the aforementioned slit in communication I have found that during opening of my envelopes, as seen in FIGURE 5, the webs 1 and 2 are always ripped apart along line 48, that is with this expedient the rip does not wander randomly away from line 48 during the envelope opening.

Numeral 53, in FIGURE 4 designates generally a typical return address typed or printed upon the initial ink coating subsequent to the formation of the envelope strip as set out in FIGURES 1 and 2. Obviously any second impression typed or printed on the initial coating should be of a different color so as to be plainly discernible.

Numeral 55, in FIGURE 4, designates generally a typical address shown printed or otherwise impressed upon a typical piece of mailing matter 54 sealed within the envelope and seen through the transparent window-area 23.

Before mailing the envelope of FIGURE 4, the excess material lying above the upper edge of heat seal line 52 is trimmed off. It will be noted that such trimming passes through hole 50 (see FIGURE 5) and leaves only portions of the perimeter forming material of original hole 50. The trimming step is preferably performed concurrent with the formation of heat-seal line 52 by means of a conventional heat-sealer and trimmer device, but obviously trimming may take place before or after the heat seal line 52 (or other sealing means) is completed.

Referring now to FIGURE 5, there is seen one of my envelopes as it would appear when received and partially opened by an addressee. Opening is accomplish by grasping the envelope material on opposite sides of line 48 adjacent hole 50 and pulling in opposite directions. As previously mentioned, entry hole 50 insures that tearing will take place along line 48. Obviously, once the right end of the envelope is torn off or substantially off, the mailing material therein may be removed in the usual manner.

Although the illustrated embodiment relates to the formation of a strip of but a single width of envelopes, it is obvious that, with slight modifications, strips containing a plurality of side by side envelopes could be produced.

The envelopes made by practicing the method of this invention may be formed of web material of any practical thickness desired. Obviously, the thicker the material employed, the stiffer the individual finished envelope will be. Also the ink coating may be applied to produce complete opacity of the webs, or in lighter coats to merely render the webs translucent. If thin plastic webs are employed, it is sometimes found desirable to attach a conventional adhesive-backed unprinted paper label or patch to the front of the finished envelope as shown at 56 in FIGURE 5. By this expedient, a forwarding address may be written on the patch with pen or pencil with the assurance that the writing instrument will not dig into and tear the envelope. With thicker films, such a patch is not necessary.

Although the illustrated embodiment relates to side filling, end opening, window-type, first class mailing envelopes, the method of the invention with obvious modification is equally applicable to the production of other types of envelopes for first class as well as other classes of mail. For example, in forming mailing envelopes acceptable as third class mailing covers, only small portions of the front web would be coated during formation of the envelope strip. With the remainder of each envelope's front and back left uncoated, various advertising matter, or the like, inserted into the envelope would be clearly visible through the uncoated portions of each envelope at all times. The small portions of each envelope which are coated are for the purpose of subsequently receiving postal indicia, advertising, or other printed, typed or written indica as desired by a particular user.

Although the illustrated embodiment relates to end-opening envelopes, it is obvious that the method could be easily modified to form bottom or top-opening envelopes. Also, although the opening feature 48, 50 is shown located at the right-hand side of the individual envelope, such location is illustrative only. In actual practice on end-opening envelopes, it is preferred to place the opening feature closely adjacent and parallel to the left-hand edge of the envelopes although, of course it may be located wherever a user should find most convenient.

Having now completely described one embodiment of a continuous form, series-connected envelope assembly produced by the method of my invention, what I claim as novel and desire to secure by Letters Patent is:

1. The method of forming an assembly of series-connected detachable mailing envelopes comprising: bringing together into superimposed contacting relationship two initially transparent webs of thermoplastic material; coating an exterior portion of at least one of said webs with a substance that is adherent to said thermoplastic material and that is suitable to receive printed or typed indicia to render said portion at least translucent; heat-sealing said webs together in appropriate places to define a succession of individual envelopes; and providing a line of weakening between adjacent envelopes whereby said envelopes may be readily detached from each other.

2. The method of claim 1 including the step of applying discernible indicia atop said coated portion.

3. The method of forming an assembly of series-connected detachable mailing envelopes comprising: applying a coating which is adherent to said thermoplastic material and which is suitable to receive typed or printed indicia to a portion of a first web of initially transparent thermoplastic material to render said portion at least translucent; bringing said first web into facing, contacting relationship with a second web of thermoplastic material; heat sealing said webs together in appropirate places to define a succession of individual interconnected envelopes; providing a line of weakening between adjacent individual envelopes whereby said envelopes may be readily detached from each other; forming means at opposite margins of said webs for feeding said assembly into a machine for subsequent operations; and providing additional lines of weakening adjacent said feeding means whereby said margins may be subsequently removed from said assembly.

4. The method of claim 3 including the step of forming opening means in each of said envelopes.

5. The method of forming an assembly of series-connected, window-type mailing envelopes comprising: bringing together into facing relationship a front web and a back web of initially transparent thermoplastic material; applying a coating material which is adherent to said thermoplastic material and which is suitable to receive printed or typed indicia such as postal indicia to some portions of the outside face of said front web so as to render said some portions at least translucent with other portions of said face being left free of coating material to form windows; and joining said two webs in appropriate places to form a succession of interconnected individual envelopes each having a partially coated window including front, and a back.

6. The method of claim 5 including the step of apply-

ing a coating to at least a portion of one face of the back of each envelope so as to render said portion coated before and of each back at least translucent.

7. The method of claim 6 including applying indicia atop one of said coatings.

8. The method of claim 5 wherein said two webs are brought into contacting relationship after said coating material is applied.

9. The method of claim 5 wherein said two webs are joined together before said coating material is applied.

10. The method of forming an assembly of series-connected detachable mailing envelopes comprising: bringing together into superimposed contacting relationship two initially transparent webs of thermoplastic material; heat sealing said webs together in appropriate places to define a succession of individual envelopes; coating a portion of each envelope with a substance that is adherent to said thermoplastic material and that is suitable to receive printed or typed indicia such as postal indicia to render said portion at least translucent; and providing a line of weakening between adjacent envelopes whereby said envelopes may be readily detached from each other.

11. The method of forming an assembly of series-connected mailing envelopes comprising: providing two webs of transparent thermoplastic material; coating portions of at least one of said webs with a substance that is adherent to said thermoplastic material and that is suitable to receive printed or typed indicia to render said portions at least translucent; bringing said webs into superimposed contacting relationship; and joining said two webs together to define a succession of individual envelopes, each of which includes at least one translucent portion.

12. The method of claim 11 wherein said two webs are brought into contacting relationship before said coating is applied.

13. The method of claim 11 wherein said two webs are joined together before said coating is applied.

14. The method of forming a mailing envelope comprising: providing two portions of initially transparent thermoplastic material; bringing said portions together into superimposed contacting relationship; affixing said portions together along lines adjacent margins thereof to define an envelope pocket into which mailing matter may be inserted; and, coating an exterior area on at least one of said portions with a substance which is adherent to said thermoplastic material and which is suitable to receive printed or typed indicia, such as postal indicia to render said area at least translucent.

15. The method of claim 14 wherein said coating is applied before said portions are brought together into contacting relationship.

16. The method of claim 14 wherein said portions are affixed together to define an envelope pocket before said coating is applied.

17. The method of claim 14 including affixing a paper patch to said coated area to provide a base for the reception of indicia superimposed thereon.

18. The method of claim 14 wherein one of said portions comprises part of one web of material and the other of said portions comprises a part of a different web of material.

19. The method of claim 14 wherein said coating is applied to an exterior surface of said pocket to provide an area to which printed indicia will adhere, and including the step of superimposing said indicia on said area.

20. A method of enclosing and mailing articles in envelopes of thermoplastic material suitable for receiving postal indicia on an outer surface, the steps comprising: forming a succession of individual envelopes of thermoplastic web, applying to the web on a surface that forms the outside of the envelopes a coating of material that will render a transparent web at least translucent and that forms a base to which postal indicia applied with ink will readily adhere, inserting an article to be mailed within an individual envelope, and sealing and mailing the envelope, whereby the outside surface of the mailed thermoplastic envelope can be stamped with postal indicia on the applied coating and the postal indicia will adhere thereto.

References Cited

UNITED STATES PATENTS

824,908	7/1906	Cohn	229—71
835,860	11/1906	Cohn	179—103
2,374,026	4/1945	McKeen	229—71 XR
2,824,685	2/1958	Patton	93—61 XR
2,988,969	6/1961	Stratton et al.	93—61

FOREIGN PATENTS

14,478	1904	Great Britain.
1,086,198	8/1954	France.

BERNARD STICKNEY, *Primary Examiner.*