Feb. 3, 1959 E. E. FACHON 2,871,654

WATERPROOF WATCH-CASE

Filed April 14, 1954

Fig. 1.

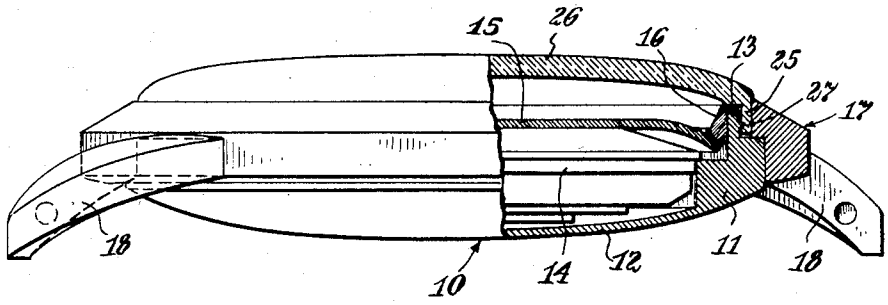

Fig. 3.

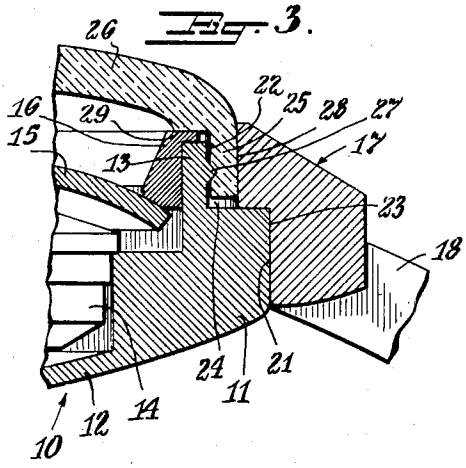

Fig. 2.

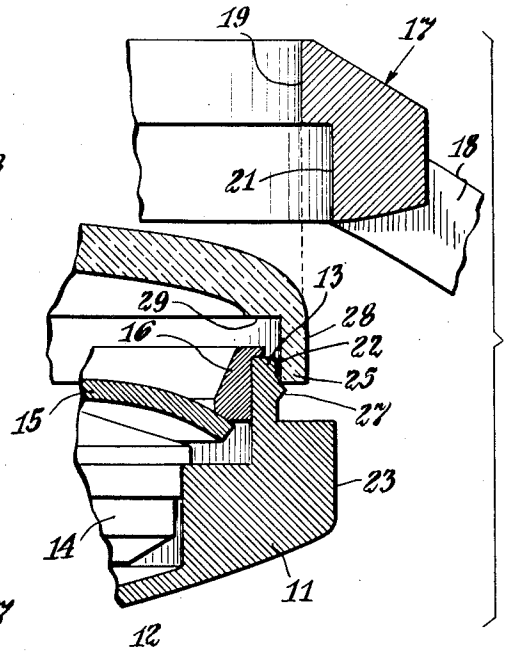

Fig. 4.

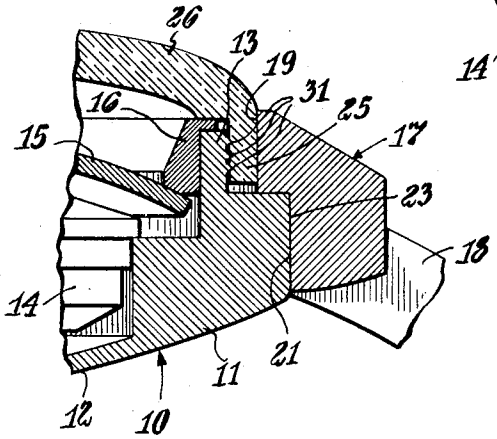

INVENTOR.
EMIL E. FACHON
BY J. M. Rennhow
ATTORNEY.

United States Patent Office

2,871,654

Patented Feb. 3, 1959

1

2,871,654

WATERPROOF WATCH-CASE

Emil E. Fachon, Edgewood, R. I., assignor to Bulova Watch Company Inc., New York, N. Y., a corporation of New York

Application April 14, 1954, Serial No. 423,034

8 Claims. (Cl. 58—90)

The present invention relates to an improvement in watch construction and more particularly to a waterproof watch-case.

The desirability of providing a watch case impervious to the entrance of dust, moisture or other foreign matter detrimental to the delicate watch mechanism, is well recognized.

Many and varied constructions have been proposed and it has been found that certain advantages are gained in this direction when a watch crystal of a plastic material is employed.

When using a plastic crystal, an annular collar or flange of the crystal may be compressed between metallic parts of the watch casing to effect a seal. As will be evident, however, the contacting surfaces between the crystal flange and the metallic casing parts result in the necessity of making contact with relatively large surface areas. The component parts must, therefore, be extremely accurate since any variation in the relative dimensions of the parts will cause a variation in the degree of contact between the surfaces resulting in an imperfect seal against the entrance of moisture. The flanges of different crystals may vary slightly in thickness, or certain portions of a single flange may differ in thickness, whereupon the degree of compression between the metallic casing parts will vary to the end that certain portions of the flange or collar will not be under sufficient pressure to provide the desired effective seal.

In accordance with the present invention the relatively large contact areas as heretofore employed are not required, and more effective and assured sealing effect is made possible by avoiding the necessity of exerting pressure over a relatively large contact surface. It has been found practical to reduce the contacting area to a minimum and at the same time increase its effectiveness as a seal against the entrance of dust or moisture into the watch casing.

In the present improved waterproof seal construction one of the metallic watch case parts is provided with a thin annular ridge or bead which, when the parts are assembled, not only makes contact with the surface of the crystal collar or flange, but, by reason of the relative dimensions of the metal casing parts, is pressed into and below the normal surface of the crystal flange. The forced contact between the ridge or bead and the crystal flange results in an effective seal, and in order to meet the condition of possible variation in the thickness of the crystal flange the relative dimensions of the metallic parts may be such that when assembled the ridge or bead will be embedded in the crystal flange to a greater or lesser degree, thus compensating for any variation of thickness and assuring moisture tight relation between the crystal flange and the contacting metallic watch case part.

By providing a sealing surface area which may vary in diameter and still maintain an effective seal, considerable tolerance may be had in the dimensions of the respective parts. This is important from the practical

2

standpoint in the manufacture of an article produced under quantity production methods.

The invention will be more clearly understood by reference to the following description together with the accompanying drawing in which:

Fig. 1 is an enlarged side view of a watch case partly in vertical cross section showing the parts assembled;

Fig. 2 is an exploded view showing the parts separated and in position to be assembled;

Fig. 3 is an enlarged vertical sectional view of the watch case with the parts assembled; and

Fig. 4 is a view similar to that of Fig. 2 but showing a modification of the invention.

As shown in the drawing a watch casing, indicated as a whole by reference character **10**, may be provided of a selected shape and for the purpose of illustrating one example of the invention the casing selected is of circular form.

The casing **10** includes a side wall or rim **11** surrounding a back plate **12**, constituting a receptacle or container for the watch movement. In the present showing the plate **12** is circular. Extending from and integral with the rim is what may be termed an annular rim flange **13**. The receptacle contains the watch movement which is indicated as whole by the reference character **14** and having dial **15** engaged by a flanged retainer ring **16**.

The present embodiment of the invention employs a bezel **17** provided with watch lugs **18** as commonly employed to attach the watch to the end terminals of a bracelet or strap. The bezel **17** is formed with annular surface portions **19** and **21**. When the parts are in assembled relation surface portion **19** thereof is disposed in spaced and opposed relation to annular surface portion **22** of rim flange **13**. Surface **21** is in contact with or may be in opposed spaced relation to surface **23** of rim **11**.

With the arrangement of the parts as shown an annular channel or groove **24** is provided to contain an annular flange or collar **25** of a crystal **26**. This crystal is made from a suitable compressible material such as a plastic or the like which may be distorted when compressed but of sufficient strength to serve its purpose as a watch crystal and as pointed out above the object being to bring about a sealing relation between the crystal and the watch casing **10**.

As hereinabove mentioned, when producing an article of the present type which must be made in quantity, and at the same time with precision to a practical degree, it is difficult to assure moisture tight contact over a relatively large area.

It has been found that the actual contact or sealing area may be reduced to a minimum with the result that a more effective seal is attained. This is accomplished by providing surface portion **22** of flange **13**, intermediate its edges, with an annular rib or bead **27** which may have side surfaces at opposite angles and intersecting to form a thin edge or apex, and provide what may be termed an extended attenuated surface portion to deform the collar to effect a seal.

The inside diameter of crystal collar **25** may be of slightly greater diameter than the outer diameter of the annular casing flange **13**. Thus the crystal may be applied to cause flange **25** to surround flange **13** with the rib or bead **27** in contact with the surface of the crystal collar. The bezel may then be moved to engage its surface **19** with the outer surface **28** of crystal collar **25**. The diameter of surface **19** is so selected that when in assembled relation to the component parts, pressure is exerted to compress the rib **27** into the inner annular surface of crystal collar **25**.

It will be evident that it is not necessary to compress the flange **25** to such degree that the entire rib or bead is embedded in the crystal flange. It is only necessary to estab-

lish firm contact by exerting sufficient pressure to cause the contact surface of the ridge to intimately engage and slightly deform the compressible material of the crystal. The degree of compression may vary and at the same time produce the required moisture tight relation. Obviously therefore this makes possible more latitude in the degree of accuracy of the dimensions of the related parts to the practical advantage of quantity production.

When the parts are assembled the crystal is applied by moving the collar 25 until an annular surface 29 of the crystal seats on the flange of retainer ring 16 which in turn contacts the upper edge of flange 13. The crystal is flexible and the collar 25 readily passes over the ridge 27. In one practical embodiment of the invention a crystal of about 1.1220 inches in diameter may be employed in which case the annular ridge 27 has a base width of about .012 inch and a height of about .003 inch and it has been found in practise that if sufficient pressure is applied to press the ridge 27 sufficiently to deform the plastic flange an effective seal is attained while leaving clearance between the outer flat surface of flange 13 and the inner flat surface of the crystal flange. It will be evident that the dimensions or form of the ridge or bead may be varied as practical requirements demand. If desirable the flange 13 may be provided with a plurality of ridges or beads 31 as shown in Fig. 4.

The use of a ridge or bead which deforms or bights into the plastic crystal flange; in addition to providing an effective seal forms a channel which in conjunction with the ridge, serves to lock the crystal in fixed relation to the component metallic parts of the watch casing.

From the foregoing it will be understood that the present invention is directed to the provision of a moisture tight watch casing wherein the contacting sealing areas are reduced to a minimum to insure intimate sealing relation between the metallic elements of the casing and the crystal whereby the uncertainty of attaining a positive seal under varying manufacturing conditions is avoided.

Although a preferred embodiment of the invention is shown and described herein it is to be understood that modifications may be made therein without departing from the spirit and scope of the invention as set forth in the appended claims.

What is claimed is:

1. A moisture proof watch casing comprising a container for a watch movement, said container including a back plate and an upstanding rim having a rim-flange, a crystal of compressible material having a backwardly extending integral collar outside said rim-flange along a sidewall surface portion of the latter, a bezel for said container and having an inside surface portion received endwise over said sidewall surface portion of the rim-flange and outside said crystal collar, and an attenuated portion extending around one of said surface portions in integral relation thereto and having a contact surface adjacent to the other of said surface portions, locally reducing the space between said surface portions and by pressure locally reducing the thickness of said compressible collar, and thus providing a moisture tight seal between said surface portions frictionally resisting endwise separation of said bezel, crystal and container from their assembled positions.

2. A moisture proof watch casing comprising a container for a watch movement, said container including a back plate and an upstanding rim having a rim-flange, a crystal of compressible material having a backwardly extending smooth surfaced integral annular collar outside said rim-flange along an annular sidewall surface portion of the latter, a bezel for said container having an annular inside surface portion received endwise over said sidewall surface portion of the rim-flange and outside said crystal collar, and a ridge extending around one of said surface portions in integral relation thereto and having a contact surface adjacent to the other of said surface portions, locally reducing the space between said surface portions and by pressure locally reducing the thickness of said compressible collar, and thus providing a moisture tight seal between said surface portions frictionally resisting endwise separation of said bezel, crystal and container from their assembled positions.

3. A moisture proof watch casing comprising a container for a watch movement, said container including a back plate and an upstanding rim having a rim-flange, a crystal of compressible material having a backwardly extending smooth surfaced integral annular collar outside said rim-flange along an annular sidewall surface portion of the latter, a bezel for said container having an annular inside surface portion received endwise over said sidewall surface portion of the rim-flange and outside said crystal collar, and a raised annulus extending around one of said surface portions in integral relation thereto and having a contact surface adjacent to the other of said surface portions, locally reducing the space between said surface portions and by pressure locally reducing the thickness of said compressible collar, and thus providing a moisture tight seal between said surface portions frictionally resisting endwise separation of said bezel, crystal and container from their assembled positions.

4. A moisture proof watch casing comprising a container for a watch movement, said container including a back plate and an upstanding rim having a rim-flange, a crystal of compressible material having a backwardly extending smooth surfaced integral annular collar outside said rim-flange along an annular sidewall surface portion of the latter, a bezel for said container received endwise over said sidewall surface portion of the rim-flange and outside said crystal collar, said bezel and rim having seating faces against each other behind said rim-flange, and an attenuated portion extending around one of said surface portions in integral relation thereto and having a contact surface adjacent to the other of said surface portions, locally reducing the space between said surface portions and by pressure locally reducing the thickness of said compressible collar, and thus providing a moisture tight seal between said surface portions frictionally resisting endwise separation of said bezel, crystal and container from their assembled positions.

5. A moisture proof watch casing comprising a container for a watch movement, said container including a back plate and an upstanding rim having a rim-flange, a crystal of compressible material having a backwardly extending integral collar outside said rim-flange along a sidewall surface portion of the latter, a bezel for said container and having an inside surface portion received endwise over said sidewall surface portion of the rim-flange and outside said crystal collar, said bezel and rim having seating faces against each other behind said rim-flange, and an attenuated portion extending around said surface portion of the rim-flange in integral relation thereto and having a contact surface adjacent to said inner surface portion of the bezel, locally reducing the space between said surface portions and by pressure locally reducing the thickness of said compressible collar, and thus providing a moisture tight seal between said surface portions frictionally resisting endwise separation of said bezel, crystal and container from their assembled positions.

6. A moisture proof watch casing comprising a container for a watch movement, said container including a back plate and an upstanding rim having a rim-flange, a crystal of compressible material having a backwardly extending smooth surfaced integral annular collar outside said rim-flange along a sidewall surface portion of the latter, a bezel for said container having an annular inside surface portion received endwise over said sidewall surface portion of the rim-flange and outside said crystal collar, said bezel and rim having annular seating faces against each other behind said rim-flange, and a raised annulus extending around said surface portion of the rim-flange in integral relation thereto and having a con-

tact surface adjacent to said inner surface portion of the bezel, locally reducing the space between said surface portions and by pressure locally reducing the thickness of said compressible collar, and thus providing a moisture tight seal between said surface portions frictionally resisting endwise separation of said bezel, crystal and container from their assembled positions.

casing which comprises providing a container and a bezel

7. The method of producing a water proof watch casing which comprises providing a container and a bezel respectively having outer and inner surface portions and an integral rib on one of said portions having a contact surface toward the other of said portions when said surface portions are substantially concentrically disposed, providing a watch crystal of compressible material and positioning an integral collar of said crystal in contact with said rib under conditions where the thickness of said collar exceeds the maximum distance between the contact surface of said rib and the other said surface portions when the portions are substantially concentrically disposed, relatively sliding said portions to substantially concentric positions on the axis of said collar and accordingly forcing the contact surface of the annular rib into said collar locally producing an intense pressure on said collar under said rib, and thus providing a moisture tight seal between said surface portions frictionally resisting endwise separation of said bezel, crystal and container from their assembled positions.

8. The method of producing a water proof watch casing which comprises providing a container and a bezel respectively having outer and inner surface portions and

an integral rib on said outer surface portion of the container affording a contact surface toward said inner surface portion of said bezel when the bezel and container are substantially concentrically disposed, providing a watch crystal of compressible material and positioning an integral collar of said crystal in contact with said rib under conditions where the thickness of said collar exceeds the maximum distance between the contact surface of said rib and the inner surface portion of said bezel when said surface portions are substantially concentrically disposed, relatively sliding said portions to substantially concentric positions on the axis of said collar and accordingly forcing the contact surface of the annular rib into said collar locally producing an intense pressure on said collar under said rib, and thus providing a moisture tight seal between said surface portions frictionally resisting endwise separation of said bezel, crystal and container from their assembled positions.

References Cited in the file of this patent

UNITED STATES PATENTS

2,025,031	Algeo et al.	Dec. 24, 1935
2,302,340	Morf	Nov. 17, 1942

FOREIGN PATENTS

175,075	Switzerland	Apr. 16, 1935
203,734	Switzerland	July 1, 1939
239,990	Switzerland	Mar. 16, 1946
505,297	Canada	Aug. 24, 1954