United States Patent

Brasty

[15] **3,675,035**

[45] **July 4, 1972**

[54] THEFT-PROOF AUTOMOBILE IGNITION SYSTEM

[72] Inventor: **Joseph Brasty,** Maple Heights, Ohio

[22] Filed: **Jan. 25, 1971**

[21] Appl. No.: **109,513**

[52] **U.S. Cl.** .....**307/10 AT,** 180/114, 340/64

[51] **Int. Cl.** **H02g 3/00**

[58] **Field of Search** .....307/10, 10 AT; 180/114; 340/64

[56] **References Cited**

UNITED STATES PATENTS

3,343,625	9/1967	Scheuermann	307/10 AT
2,620,387	12/1952	Eberhardt	307/10 AT
2,820,149	1/1958	Roth	307/10 AT
3,004,170	10/1961	Greenspan	307/10 AT
3,559,757	2/1971	Weiss	307/10 AT

Primary Examiner—Herman J. Hohauser
Attorney—Oldham & Oldham

[57] **ABSTRACT**

The theft-proof ignition system comprises a special multi-element control switch connected between the primary of an ignition coil and the breaker circuit of a distributor whereby the auto cannot be started until the special switch is closed. Shielding provided on the leads prevents any possible shorting out of the control switch. Means also may be provided to render the control switch inoperative automatically when the driver's door of the automobile is open. The shielded leads have a connection or coupling member therein.

11 Claims, 13 Drawing Figures

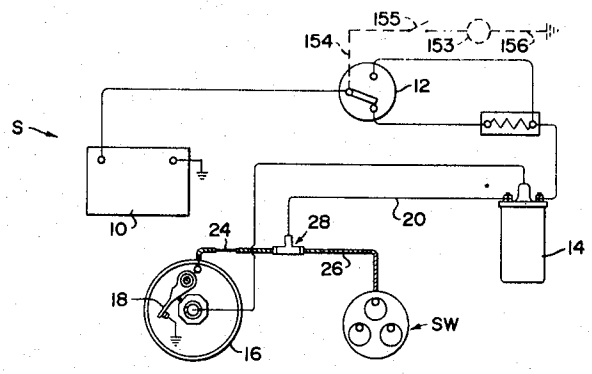

FIG. 1

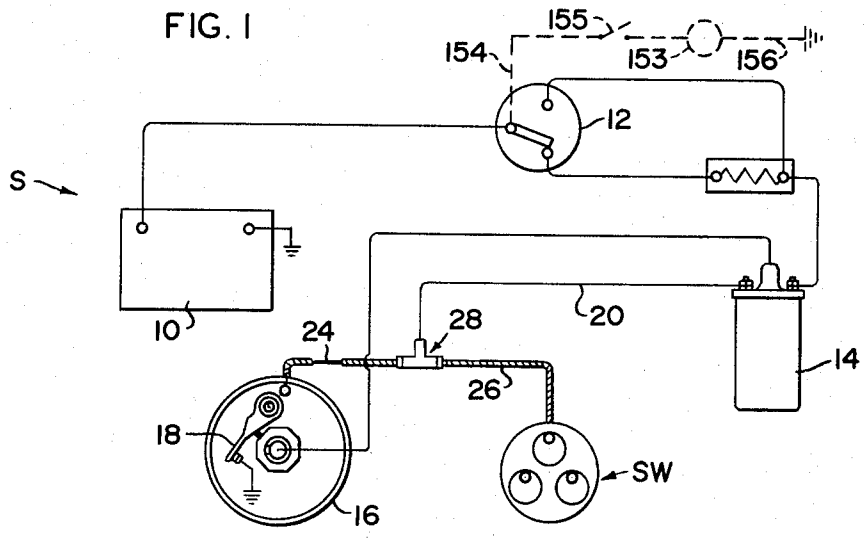

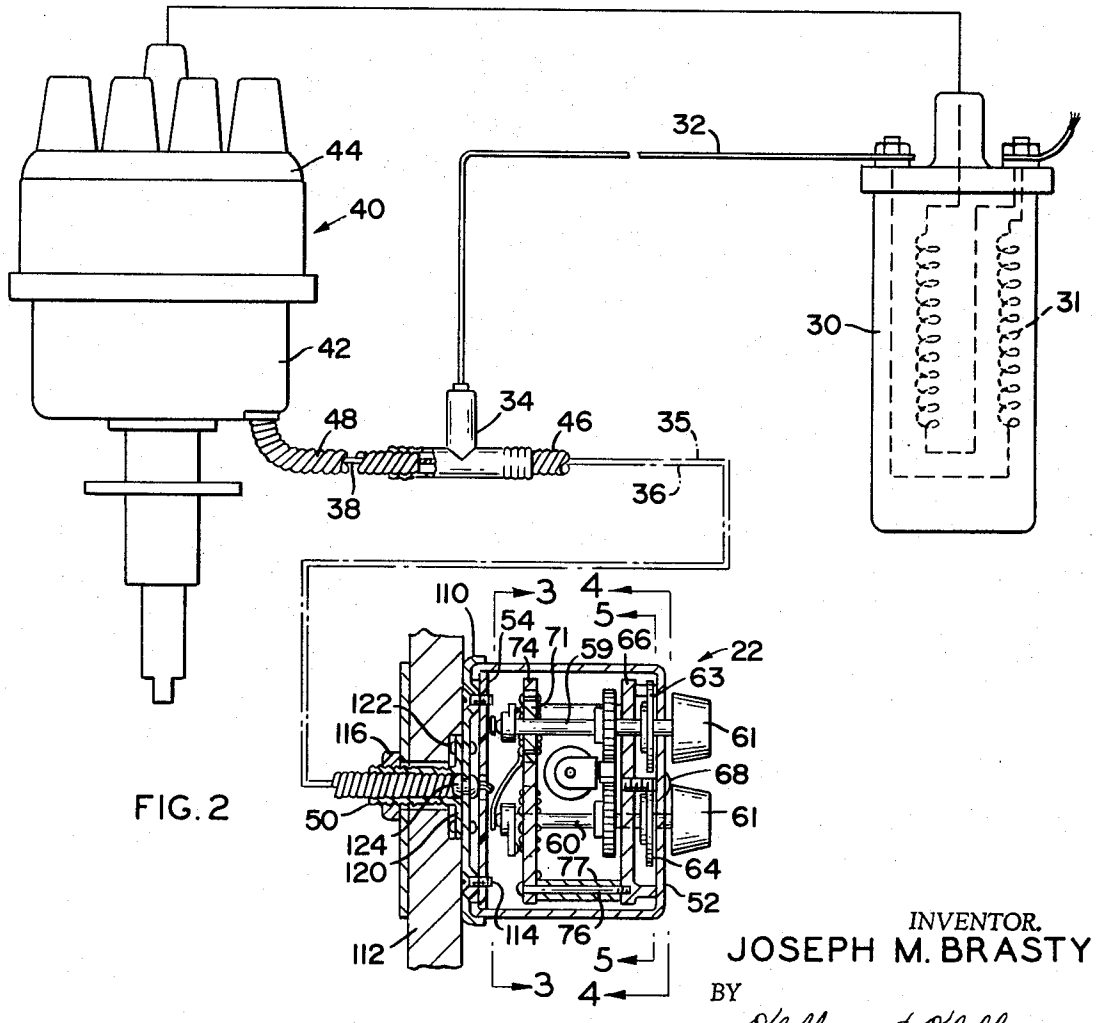

FIG. 2

INVENTOR.
JOSEPH M. BRASTY
BY
Oldham & Oldham
ATTORNEYS.

FIG. 3

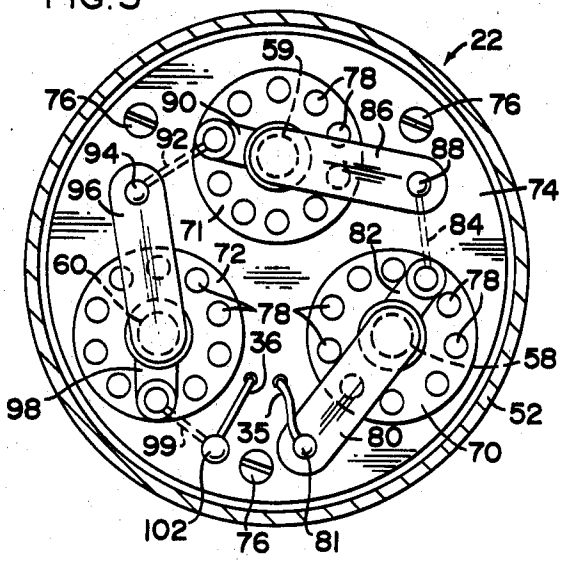

FIG. 4

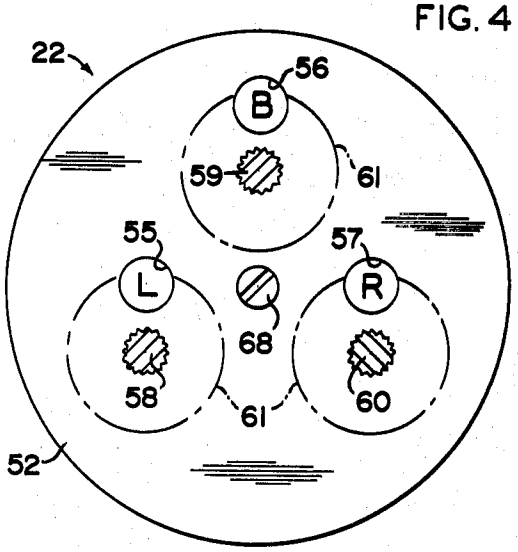

FIG. 5

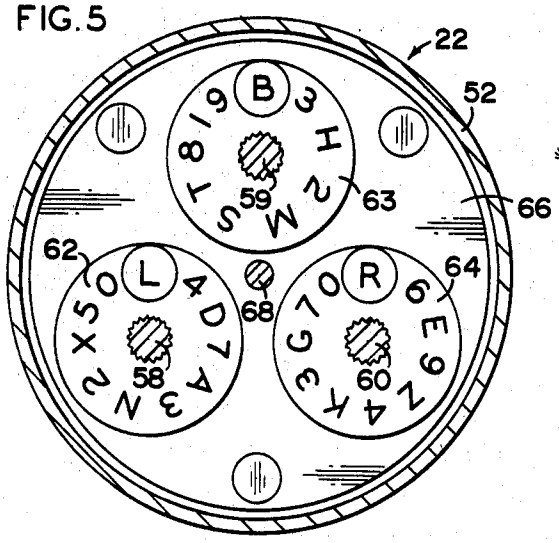

FIG. 6

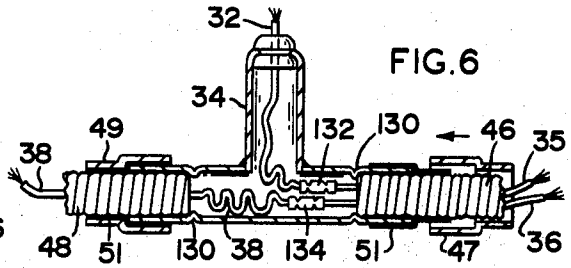

FIG. 7

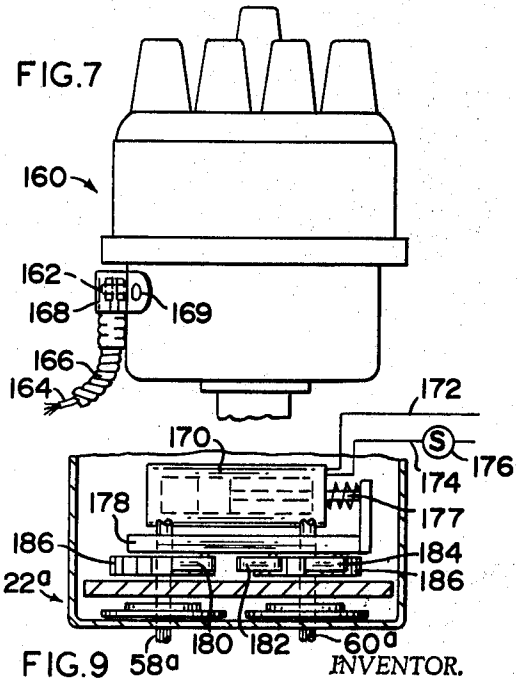

FIG. 8

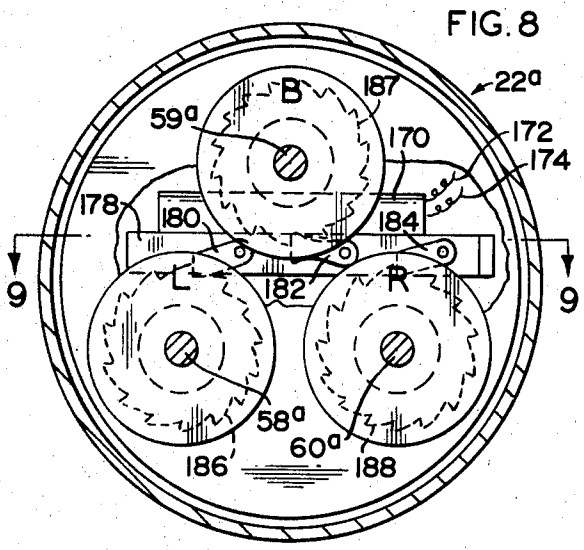

FIG. 9

INVENTOR.
JOSEPH M. BRASTY
BY
Oldham & Oldham
ATTORNEYS.

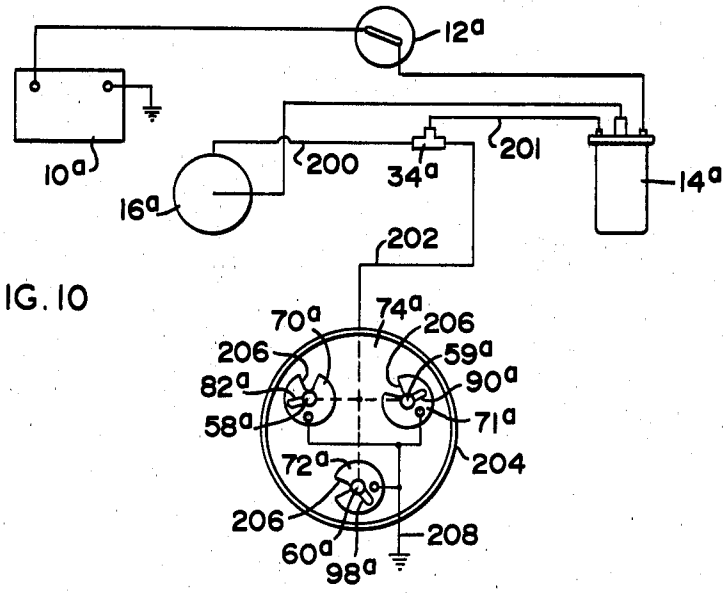

FIG. 10

FIG. 11

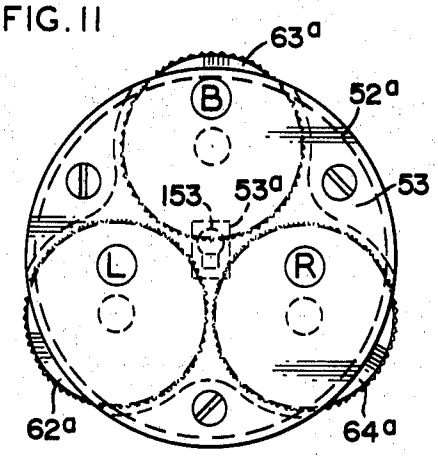

FIG. 12

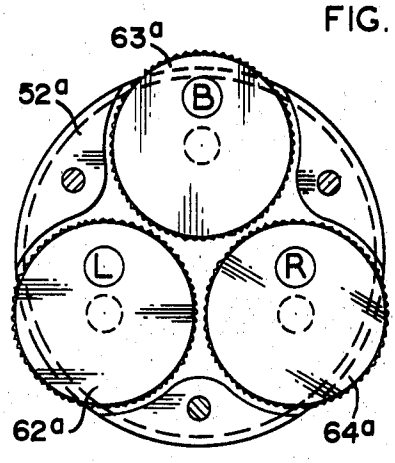

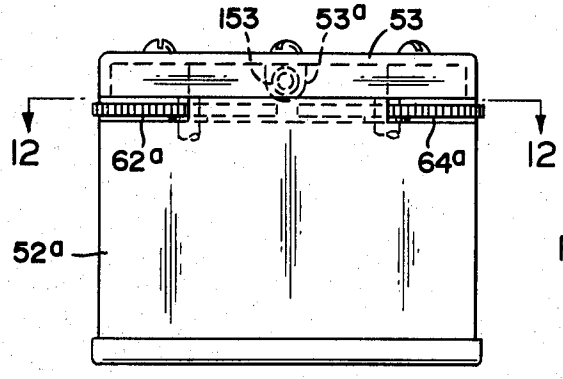

FIG. 13

INVENTOR.
JOSEPH M. BRASTY
BY
Oldham & Oldham
ATTORNEYS.

THEFT-PROOF AUTOMOBILE IGNITION SYSTEM

This invention relates to automobile ignition systems, and particularly to a theft-proof system having special shielding means and a control switch in one section of the ignition coil and distributor circuit of an ignition system for a vehicle.

BACKGROUND OF INVENTION

Heretofore there have been many different types of anti-theft devices and systems provided for automobiles. Some of such systems includes an automatic steering column lock, warning horns, special safety switches and other means to prevent unauthorized auto use. However, many of such systems have not been completely satisfactory, or the systems have been costly or difficult to install, or the systems have not been truly theft-proof. U.S. Pat. Nos. 2,242,142; 2,806,911; and 3,214,531 are representative of prior known structures.

It is the general object of the present invention to provide an improved anti-theft ignition system for an automobile or other vehicle, which system includes shielded cables or leads and/or contacts in the ignition system and by a control switch that cannot be shorted around or out of the system to destroy its control function.

Another object of the invention is to provide a relatively low cost, uncomplicated theft-proof device and means in a vehicle ignition system which means are connected between the primary of the ignition coil and the distributor make-break circuit of the distributor of an automobile for control of the system by a conveniently installed connection means.

A further object of the invention is to provide special metal shielding or covering means around certain leads in an automobile ignition system and to enclose any contacts normally exposed in this portion of the ignition system and to provide a permanent coupling means for two independent sections provided in a shielded lead.

A further object of the invention is to provide a sturdy, solid, easily used control switch in an automobile ignition theft prevention system for grounding the ignition system or for interrupting the system, as desired.

Another object is to provide a theft prevention system in a vehicle ignition system with means to render the system automatically operative to prevent starting the vehicle upon opening the driver's door of the vehicle.

Another object of the invention is to provide a special independently illuminated control switch in an automobile ignition theft safety device.

Another object of the invention is to provide special multi-contact decoder or control switches in an automobile ignition system.

A further object of the invention is to provide and form certain selective low voltage leads in an automobile ignition system so that they cannot be reached by any person for operatively shorting around such portion of the ignition system, and/or for preventing unauthorized starting of a vehicle.

Another object of the invention is to provide a special shielded connection leading to an internal contact in the breaker circuit of a distributor and wherein the shielding means extends through the housing of the distributor to render the lead enclosed thereby unaccessible; and/or to provide a theft-proof ignition system of reasonable cost that can be substituted for portions of an existing ignition system.

Other objects of the invention are to provide a theft-proof ignition system for an automobile and to form the same from relatively inexpensive commercial components together with a special control switch; to shield certain portions of the ignition system by metal enclosures positioned therearound; to provide a theft-proof ignition system which is relatively easily installed even on existing ignition systems, to provide a special connection means in an ignition system to facilitate the connection and use of shielded leads in the system; to provide sturdy, solid connections for leads in an ignition system; and to secure the control system in an automobile by relatively compact, sturdy positioning means.

The foregoing and other objects and advantages of the invention will be made more apparent as the specification proceeds.

Attention now is particularly directed to the accompanying drawings wherein:

FIG. **1** is a diagrammatic wiring diagram of an automobile ignition system primarily of a conventional nature but having an embodiment of the invention included therein;

FIG. **2** is another view, partly diagrammatic, of another theft-proof automotive ignition system forming an embodiment of the principles of the invention;

FIG. **3** is a rear elevation of the control switch of FIG. **1** taken on line **3—3** thereof;

FIG. **4** is a front sectional elevation of the control switch of FIG. **2** taken on line **2—2** thereof;

FIG. **5** is a detailed vertical section taken on line **5—5** of FIG. **2** of the control switch;

FIG. **6** is an exploded view of a junction box and a portion of the members connected thereto before complete assembly thereof into final operative positions;

FIG. **7** is a fragmentary elevation of a modified distributor having means of the invention or a portion of a control means connected thereto;

FIG. **8** is a vertical sectional view of a modified selector switch;

FIG. **9** is a horizontal section taken on line **9—9** of FIG. **8**;

FIG. **10** is a schematic wiring diagram of another embodiment of the invention;

FIG. **11** is a top plan view of a modified control switch as used in the invention;

FIG. **12** is a horizontal section taken on line **12—12** of FIG. **13**; and

FIG. **13** is a side elevation of the control switch of FIG. **11**.

When referring to corresponding members shown in the drawings and referred to in the specification, corresponding numerals are used to facilitate comparison therebetween.

INVENTIVE CONCEPT

The invention relates to an automobile ignition system including a power supply, a coil, a distributor, and leads operatively connecting the same. The inventive concept particularly resides in the improvement, as one embodiment of the invention, which comprises a control switch means connected in a low voltage lead connecting the primary of the coil to the distributor breaker circuit, and tubular shielding means operatively enclosing all portions of the low power lead extending between the control switch means and the distributor and the contacts thereof. The invention also relates to improvements in a multi-contact control switch means and to a connector member such as a junction box provided in the low power shielded distributor lead.

Reference now is particularly made to the details of the structure shown in the drawings, and FIG. **1** shows an automotive ignition system S including a battery or other power supply **10**, an ignition switch **12**, an ignition coil **14** having a primary and a secondary winding, and a distributor **16** having a breaker means **18** therein. A lead **20** from the primary of the ignition coil **14** connects to a multi-contact, multi-position selector switch indicated as a whole by the letters SW and a further lead **24** connects from the opposite terminal of the selector switch SW to the breaker circuit or means **18** provided in the distributor. This lead **24**, and all means connecting thereto are covered by sturdy tubular shielding members or means **26** whereby no possible exposure or contact with such lead **24** or any connection thereto is possible in the system of the invention unless part of the system is destroyed, or materially altered. A connector means **28** has portions of the leads **20** and **24** passing therethrough for the reasons set forth hereinafter. Hence, to start the vehicle, the selector switch SW must be positioned in a circuit closing position before the car will start by closing the ignition switch **12**. The starter of the car will turn the motor over but it will not start if this selector switch is in its open or non-conductive position.

Further details of another specific embodiment of the principles of the invention are shown in FIGS. 2 through 6 of the drawings, and FIG. 2 shows a conventional ignition coil 30 which as a lead 32 connecting from the primary 31 of the coil which lead enters a suitable enclosure or connector means, such as a T-shaped junction box 34, or equivalent provided in the apparatus. An extension of this lead 32, identified by the number 35, extends from an outlet of the junction box 34 to one specific embodiment of a selector switch 22 as shown in FIG. 2 and other figures of the drawings. The details of this selector switch will be described hereinafter in detail. A second lead 36 extends from the selector switch 22 to the junction box 34 and is suitably connected therein to a continuing lead 38 which extends to a distributor 40 and connects to the conventional breaker circuit (not shown) thereof which circuit is like that of the distributor 16. This distributor 40 includes a housing 42 with a removal cap or cover 44 thereon and suitably secured thereto.

It is an important feature of the present invention that the leads 35 and 36 connecting to the selector switch 22 have sturdy shielding means, such as a tubular member 46, usually metallic, enclosing the same from the junction box 34 to the selector switch. A similar shielding member 48 connects to an opposite outlet of the junction box 34 and extends to and/or through the housing 42 of the distributor 40 and is suitably secured thereto. Usually these tubular shielding members 46 and 48 are helically wound wire tubes and the junction box 34 would normally be made from metal. The ends of the tubular members 46 and 48 connecting the junction box are crimped or otherwise secured into fixed permanent relationship with opposed ends of the junction box 34 to enclose and protect the wires extending therethrough. Likewise, the opposite ends of the tubular members 46 and 48 are fixedly secured in position as by being secured to a sleeve 50 extending from a portion of the selector switch 22 and to a member forming a portion of or to extend through the housing 42 of the distributor 40 and be secured thereto. Hence, no contact can be made with the lead or wire 35 and lead 36 as well as with the continuing lead 38 or end contacts thereof. The effective shielding of the leads of the attachment of the shielding means to members in the ignition system is provided by use of the junction box or other connector or lead enclosing member in the system as described.

If desired, in some instances, the wires 32 and 35 many be a continuous member, and likewise, the lead 35 and the continuing lead 38 may be made unitary but for convenience of assembly and installation, is a feature of the invention to break these leads into two sections as shown in the drawings, as this greatly facilitates the operative installation of the leads and of the shielding tubes 46 and 48.

SELECTOR SWITCH

The details of the specific selector switch 22 provided in this embodiment of the invention are shown in FIGS. 2 through 6 but it should be realized that other equivalent selector switches of the multi-contact multi-position type could be used in lieu of the particular switch disclosed.

The selector switch 22 includes a housing 52 having a rear cover 54 provided thereon and suitably secured thereto. The front of the housing 52 preferably has three openings 55, 56 and 57 provided therein and control shafts 58, 59 or 60, respectively, are rotatably positioned in the housing and extend through the front of the housing 52 below and in association with the openings 55, 56 and 57, respectively. These control shafts 58 through 60 preferably are longitudinally serrated and suitable control knobs 61 individually engage therewith. The individual control shafts also position individual discs 62, 63 and 64 on the shafts 58 through 60, respectively. These discs have any suitable identification means or indicia appearing on equally circumferentially spaced peripheral portions thereof whereby only one of such indicia is visible through each of the openings 55, 56 or 57 at any one time. The discs 62, 63 and 64 are positioned within the housing 52, and the control shafts are journalled in a suitable support member such as a support plate or disc 66 positioned within the housing 52, as by a cap screw 68 or equivalent members and such support plate 66 normally is parallel to the front face or portion of the housing 52.

Individual contact discs 70, 71 and 72 are secured to and are carried by the individual control shafts 58, 59 and 60, respectively, on rearwardly extending portions of such control shafts. These individual contact discs are received in suitable openings or apertures formed in a contact plate 74 secured to the support plate 66 in any conventional manner, as by cap screws 76 and spacer means 77. Each of the contact discs has a number of separate contact means thereon equal in number of the number of indicia appearing on the several indicator discs 62, 63 and 64. Such contactor means may comprise a plurality of rivets 78 secured to and extending through the contact discs 70, 71 and 72 in the same circumferentially spaced positions as the indicia appearing on the discs 62 through 64. FIG. 3 of the drawings shows that the ends of the leads or wires 35 and 36 that connect to the selector switch are fixedly secured to the contact plate 74, as by rivets, screws or other suitable means, as desired. A circuit then is adapted to be completed through the selector switch when the contact discs 70, 71 and 72 and associated means are properly positioned for circuit closing as shown in FIG. 5. Any suitable means can be used in the switch for this selective circuit closing action, and thus a conductive spring contact arm 80 is secured to the contact plate 74 and has the lead 35 connecting thereto, and with such spring contact arm 80 being secured in position by a rivet 81 whereby the arm will continually be positioned as shown in FIG. 3. As all of the rivets 78 on the contact discs are conductive, then contact can be established through the individual discs by suitable selective contact members associated with the rotatable discs. The multi-position, multi-contact circuit control means include a conductive contact arm 82, engaged by the arm 80 to complete an electric circuit thereto, and secured to the control shaft 58 for movement therewith. A permanently positioned spring contact finger or arm 84 is secured at one end to the opposite face of the contact plate 74 and resiliently bears upon one of the rivets 78 of the disc 70 whereby only when the contact arm 82 is in the radial position shown, will a contact be made through one of the rivets 78 to the arm 84 for circuit closing action in this portion of the control switch. The second contact spring, finger, arm or means 84 likewise has a resilient contact arm 86 operatively secured thereto as by means of a rivet 88 engaging and extending through the contact plate 74 and with such contact arm 86 being on the opposite side of the contact plate 74 as the second contact means or arm 84. This contact or arm 86 bears on the end of or connects electrically as by the conductive shaft 59 to a contact arm 90 secured to and movable with the control shaft 59 to connect at any time to only one of the rivets 78 on the disc 71. Another fixedly positioned spring contact or arm 92 is provided on the opposite face of the contact plate 74 to bear on the rivets 78 as the disc 71 is rotated. When the disc 71 is properly positioned, electrical contact is made through the rivet engaged by both of the arms or members 90 and 92. The opposite end of the contact arm 92 is secured in position by a rivet 94 which likewise positions a spring contact arm 96 on the opposite face of the contact plate 74 for resilient engagement with a contact member or arm 98 on the remaining contact disc 72 and carried by the control shaft 60 and movable therewith. The arm 98 engages only one of the rivets on the disc 72 at any one time to complete this portion of the circuit. A last contact arm or finger 99 is positioned by a rivet 102 that also serves to attach an end of the wire or lead 36 thereto. Such finger 99 will engage only one of the rivets 78 at any one time. Thus all of the contact dials and/or contact discs of the selector switch must be properly operatively positioned or no circuit will be closed through this computer type switch, or multi-movable member selector switch of the invention. In the circuit as described, it is considered that the discs 70, 71 and 72 rotate with the shafts 58,

59 and 60. But if desired, the discs 70, 71 and 72 may be fixed in position or be integral with the contact plate so that only the shafts and contact arms 82, 90 and 98 rotate. Then the contact members, fingers, or arms 84, 92 and 99 would have the ends thereof adjacent the discs permanently secured to one of the rivets 78 for circuit closing action only when the arms 82, 92 and 98 are in the positions shown in FIG. 3.

FIG. 2 of the drawings best shows that a rear support bar 110 is provided and is adapted to be attached to the dash 112 of a vehicle whereby this support bar 110 can engage with the rear cover 54 of the housing 52 as by cap screws 114 to secure the selector switch operatively in position. In addition, as indicated before, the leads extending into the selector switch 22 are fully protected or shielded by tubular means therearound engaging the sleeve 50 which extends through a hole in the dash. Preferably this sleeve 50 is threaded on its one end and a lock nut 116 and a suitable lock washer may be carried by the sleeve to draw the sleeve up tightly against the rear surface of the dash 112 and position the switch. At the forward end of the sleeve 50, it preferably is flared out as at 120 and can be, for example, riveted at 122 to the support bar 110. Any desired member, such as a grommet 124 may provide an insulated passageway for the leads 35 and 36 to the interior of the selector switch. The sleeve 50 may be crimped at its exposed end and be of reduced diameter for engagement with the metal shielding tube 46 to protect the switch 22 further from any ready access thereto but still be adopted to receive and engage the lock nut 116. Or, the sleeve 50 could be cemented or bonded to the tube 46 for a permanent theft-proof connection of the parts.

FIG. 6 shows an exploded view of the junction box 34 and associated means and the drawing indicates that suitable stops or internally extending dimples 130 are usually provided adjacent opposed end portions of the junction box to abut on the ends of the tubular shielding members 46 and 48. Thereafter, conventional crimping tools are brought into engagement with ends of the junction box to crimp the tubular ends thereof against the sturdy helically wound metal shielding members shown. Usually, it is desirable to form the leads as two separate members as indicated hereinbefore and thus any desired connector means or joints, such as soldered or welded connections indicated at 132 and 134, may be formed between the two portions or sections of these wires which are attached together in the junction box. The provision of the junction box 34 facilitates making the connections required in the circuit of the invention and the securing of both ends of the shielding means. Hence the very unobvious and desirable result has been obtained that an important element of the ignition system has been rendered completely inaccessible and a prospective thief cannot short circuit the selector switch 22 nor can he provide other energization for the breaker circuit of the distributor in the automobile whereby a very effective theft-proof device has been provided by the invention.

FIG. 7 shows a modified distributor 160 which has an external terminal 162 provided thereon but in this instance, a lead 164, like the lead 38, is received within a tubular metal shield 166 that in turn engages a protective shield or cap 168 enclosing the terminal and providing a completely enclosed coupling of the lead to the breaker circuit for this distributor whereby interference with such circuit and unauthorized actuation thereof cannot be effected. The cover or cap 168 is secured as by a rivet 169 to the distributor housing, and it may be cemented to the metal shield 166 if desired.

FIGS. 8 and 9 of the drawings show details of a modification of the present invention and wherein a solenoid 170 is provided. This solenoid and associated means comprises a safety feature of the invention usable with any of the control switches of the invention but shown separately for clarity. The solenoid connects by leads 172 and 174 to a power circuit which has a control switch 176 therein. The switch 176 is conventional and is positioned on the driver's door frame to be closed when the driver's door of the vehicle is opened, and is known in the art. Power is supplied to the switch 176 from a power circuit in the automobile. The solenoid 170 has an armature or rod 177 and an actuator 178 is operatively secured thereto for movement therewith. The actuator 178 has a plurality of pawls 180, 182 and 184 pivotally secured thereto at longitudinally spaced portions thereof. These pawls are adapted to engage with serrations or notches provided on discs 186, 187 and 188 secured to the individual control shafts 58*a*, 59*a* and 60 *a* in the modified selector or decoder switch 22*a*. Hence, on actuation, the solenoid will effect arcuate movement of the control shafts one or more notches, as desired, and determined by the operative characteristics of the solenoid provided. The pawls can be spring biased to engage the serrations on the discs 186, 187 and 188. Hence, an automatic safety device has been provided for deactivating the selector switch 22*a* or equivalent means provided in the apparatus whereby a driver cannot inadvertently leave the selector switch in a closed or operative position when leaving the car.

It will be appreciated that the metal shielding members or tubes 46 and 48 can be attached to the junction box in any desired manner. However, one further feature of the invention is that the metal junction box 34 can be longitudinally split into two usually equal size parts and the members 46 and 48 are secured to different end portions of the junction box by means of connecting or cover sleeves 47 and 49, as shown in FIG. 6. The ends of the tubular members may be abutted against corresponding ends of the junction box and then with the shielding sleeves 47 and 49 of uniform diameter and being permanently bonded in place as by use of any conventional quick setting non-conductive cement or adhesive 51. Known epoxy cements or similar cements, preferably of a quick set nature, are used to secure the cover sleeves 47 and 49 permanently in position. Or the sleeves 47 and 49 may have shoulders therein when the tubes 46 and 48 extend into the junction boxes shown in FIG. 6. However, of course, before such sleeves 47 and 49 are positioned, the leads 32 and 35 are secured together, as by any known connector means 132 and likewise the leads 36 and 38 are secured together by the conventional connector 134. The two parts of the junction box are engaged with each other and then the sleeves 47 and 49 are telescoped into engagement with the opposite ends of the junction box to hold them together. Any additional lengths of the leads provided can be slid or pushed back into the junction box, or permitted to remain in end portions of the tubular members, as desired, before the junction box is permanently assembled. However, by use of the sleeves and/or by attaching the metal shielding members in position in this manner, the opposite ends of the leads 35 and 36 and tube 46 can be permanently attached to the control or computer switch 50. Provision of the junction box permits the leads to be received within the tubular shielding members and to enable opposite ends of these shielding members to be fixedly secured to the housing 52 and associated members of the switch 22 and/or to the distributor housing 42, as required.

FIG. 10 shows a modified control circuit where a battery 10*a* connects through an ignition switch 12*a*, a coil 14*a*, a junction box 34*a* to a distributor 16*a*. Shielded leads 200 and 202 connect from the junction box 34a to the distributor make-break circuit and to a decoder and control switch 204, respectively. As a feature of this embodiment of the invention, a low power lead 201 from the coil 14*a* connects to both of the leads 200 and 202 in the junction box. The control switch 204 is designed to ground the lead 202 and prevent the vehicle from starting until the switch 204 is set in an operative position.

Specifically, the switch 204 would have three control dials in it as in the other embodiments of the invention. However any suitable member of control dials may be used in any embodiment of the invention but three gives a good control action. Three conductive discs 70*a*, 71*a*, and 72*a* are carried on an insulation member 74*a* that is secured in the switch 204. These discs have cut out sections 206 therein which if desired can be filled with non-conductive members. Conductive arms

82*a*, 90*a* and 98*a* are secured to shafts 58*a*, 59*a* and 60*a* for rotation therewith. The arms 82*a*, 90*a*, and 98*a* are insulated from the discs 70*a*, 71*a*, and 72*a*. The lead 202 operatively connects to these arms 82*a*, 90*a*, and 98*a*, and a ground circuit is connected to each of the discs by portions of a grounded lead 208. Hence unless all of the arms 82*a*, 90*a*, and 98*a* are set to engage the non-conductive or cut out sections 206 of the discs any one of these parallel circuits will ground the lead 202 and hence the power lead 201 to render the ignition starting system inoperative.

Of course, the shafts 58*a*, 59*a* and 60*a* have indicator dials like the dials 62, 63 and 64 secured thereto for coding the switch 204 and providing for rotation of the shafts to set the switch in a ground or non-ground condition to permit authorized or convenient control of the ignition system for vehicle starting. Any suitable friction means may be associated with the shafts or (dials) or discs 70*a*, 71*a* and 72*a* for uniform rotary movement of the shafts at all times. The leads 200 and 202 are shielded like the leads 35, 36 and 38.

A further modified housing 52*a* is shown in FIGS. 11 to 13 of the drawings. In this instance, the housing 52*a* preferably is of a molded metal or plastic configuration and it has a removable cover plate 53 provided thereon. This top plate or cover plate 53 preferably has a center section 53*a* provided thereon and in which a small bulb 153 is received. A suitable opening or openings is provided at at least one end or other portion of the projection 53*a* whereby light can spread out from the projection 53*a* over adjacent areas in the housing and illuminate individual dials 62*a*, 63*a* and 64*a* similar to the dials 62, 63 and 64 in the other embodiment of the invention. In this instance, portions of the dials protrude from the sides of the housing 52*a* for manual rotation of the dials and their positioning shafts. The bulb 153 would be connected in the vehicle power circuit, for example, in any conventional manner, one typical connection for which is indicated in dotted lines in FIG. 1 wherein a power lead 154 would connect to the hot side of the ignition switch 12 and to a control switch 155 usually positioned on the dash. From the switch 155, the power lead would extend to the bulb 153 and through it or its mounting means by a lead 156 to a suitable ground connection so that whenever illumination is desired, in this multi-position control switch, it can be obtained through the switch 155.

It should be understood that the shielding means for the low power lead in the distributor breaker circuit may be of any suitable nature preferably metal, and that the contacts for the selector switch as well as the distributor contact are covered by metal or a very tough plastic material or cement to render them inaccessible. Or a plastic, such as an epoxy, may be applied to such contacts and be set up in place to cover and enclose the contacts and render them inaccessible. At least the ends of the leads 35 and 36 within the switch 22 and the end of the lead 38 and its connection to the distributor as well as the remainders of the leads 36 and 38 should be protected and be inaccessible.

From the foregoing, it is submitted that a novel, improved unobvious theft-proof device has been provided for a vehicle ignition system.

While several complete embodiments of the invention have been disclosed herein, it will be appreciated that modification of these particular embodiments of the invention may be resorted to without departing from the scope of the invention as defined in the appended claims.

What is claimed is:

1. In an automobile ignition system including a power supply, a coil, a distributor having a breaker circuit and lead means operatively connecting the same and including a low voltage lead connecting said coil to the breaker circuit of said distributor, the improvement comprising a manually operated control switch means operatively engaging said low voltage lead to control power flow therethrough, shielding means enclosing an end section of said low voltage lead connecting to the breaker circuit of said distributor and such shielding means operatively extending to said control switch means, said shielding means being fixedly secured to said control switch means and to said distributor.

2. In an automobile ignition system as in claim 1, the improvement of said shielding means being tubular and being made from metal, and a junction box means for the part of said low power lead where said control switch means operatively engages therewith, said shielding means comprising two members one end of each being secured to said junction box means.

3. In an automobile ignition system as in claim 1, the improvement of said low voltage lead being formed from four separate sections, a tubular junction means receiving an end of each of said separate sections of said low voltage lead, and said shielding means comprising at least two tubular members each of which is fixedly secured at one of its ends to an end portion of said junction means, said low voltage lead separate sections being operatively engaged in and extending through said junction means to connect said control switch means in series therewith.

4. In an automobile ignition system as in claim 1 where said shielding means comprises a metal tube secured at its ends to said switch means and to the breaker circuit provided in said distributor, the contacts of said control switch means and of said breaker circuit also being shielded.

5. An automobile ignition system including a coil having a primary winding and a secondary winding, and a distributor having a breaker circuit operatively connected to the primary winding of said coil, the improvement of a multi-contact member control switch,

a first lead connecting a terminal of said control switch to the primary of said coil,

a completely shielded second lead connecting a second terminal of said control switch to the breaker circuit of said distributor, and

a junction enclosure means operatively receiving a length of said second lead which is formed from two portions operatively secured together within at said enclosure means.

6. In an automobile ignition system as in claim 5 where said shielding means comprises a metal tube, said first lead is made from two sections, means connect said two sections together at said enclosure means, and one section of said first lead connecting to said control switch is shielded.

7. In an automobile ignition system as in claim 6, the improvement of said shielding means being formed from two members each fixedly secured at one end to either said control switch or to said distributor, and the other ends thereof being fixedly secured to said enclosure means.

8. In an automobile ignition system as in claim 5, the improvement comprising said shielded second lead including a conductor and a tubular metal enclosure therefor, said metal enclosure being secured to a housing for said distributor and to said control switch, cover sleeves connecting an end of each of said two portions of said second lead to said enclosure means, and cement means bonding said cover sleeves to said enclosure means.

9. An automobile ignition system as in claim 1 where a second control switch is provided in a door opening in the auto and is actuated when the door opens, power means connect to said second control switch, said first control switch having a plurality of movable members therein with operative and non-operative positions, and solenoid actuated means operatively engaging at least one of said movable members and connected to said second control switch to be actuated when said door is opened and move at least one of said movable members to a non-operative position.

10. In an automobile ignition system as in claim 1 where said control switch means comprises a plurality of controllable parallel circuits connecting to ground and where said low voltage lead is grounded by said control switch means to render the ignition system inoperative unless all of said parallel circuits are set to be inoperative.

11. In an automotive ignition system as in claim 2 where said junction box means is longitudinally split into two members and means engage said members to form an operative unit therefrom.

* * * * *