Oct. 11, 1938. H. W. ROESENER 2,132,496

FLAT KNITTING MACHINE

Filed Sept. 4, 1937 7 Sheets-Sheet 1

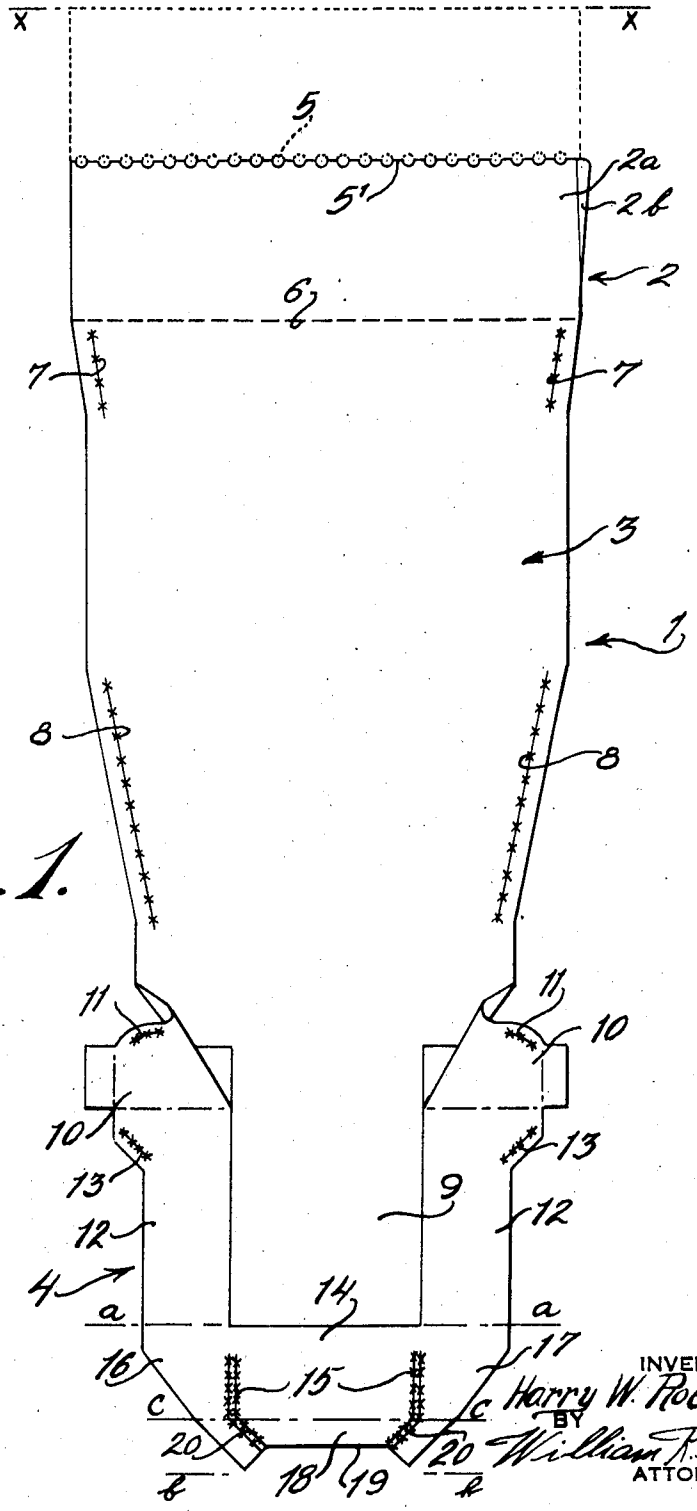

Fig. 1.

INVENTOR
Harry W. Roesener.
BY
William R. Smith.
ATTORNEY

Oct. 11, 1938. H. W. ROESENER 2,132,496

FLAT KNITTING MACHINE

Filed Sept. 4, 1937 7 Sheets-Sheet 2

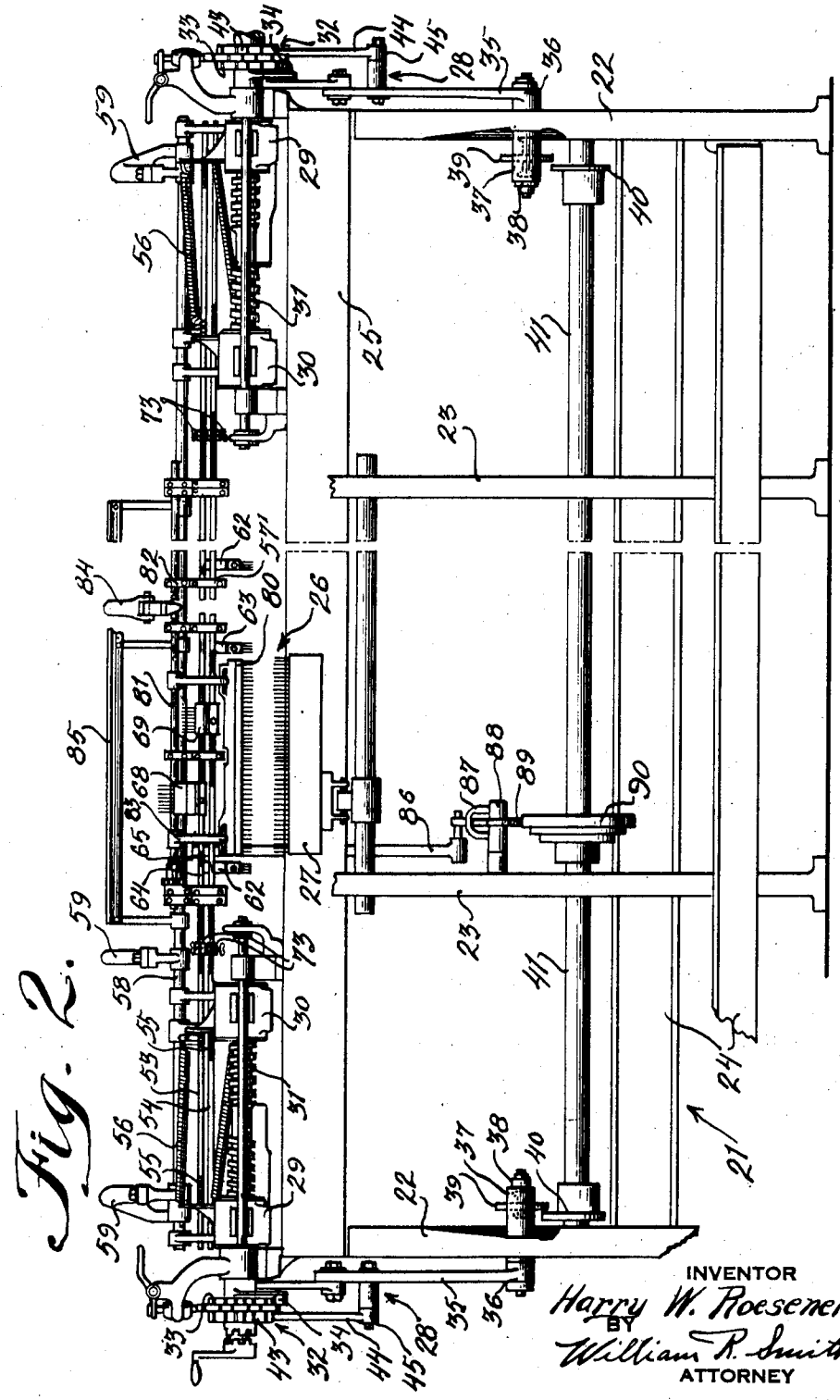

Fig. 2.

INVENTOR
Harry W. Roesener.
BY
William R. Smith.
ATTORNEY

Oct. 11, 1938. H. W. ROESENER 2,132,496

FLAT KNITTING MACHINE

Filed Sept. 4, 1937 7 Sheets-Sheet 3

Fig. 3.

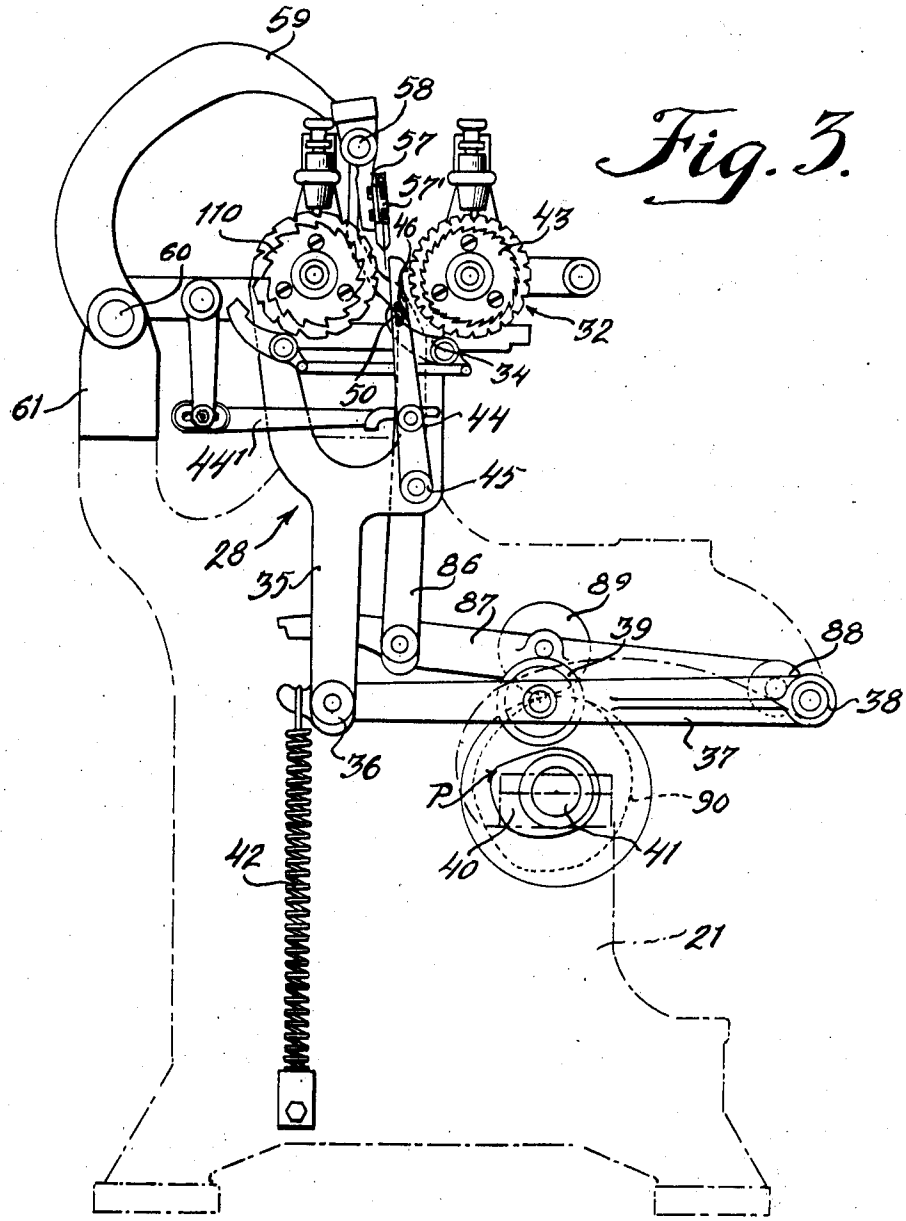

INVENTOR
Harry W. Roesener.
BY
William R. Smith.
ATTORNEY

Oct. 11, 1938. H. W. ROESENER 2,132,496

FLAT KNITTING MACHIN E

Filed Sept. 4, 1937 7 Sheets-Sheet 4

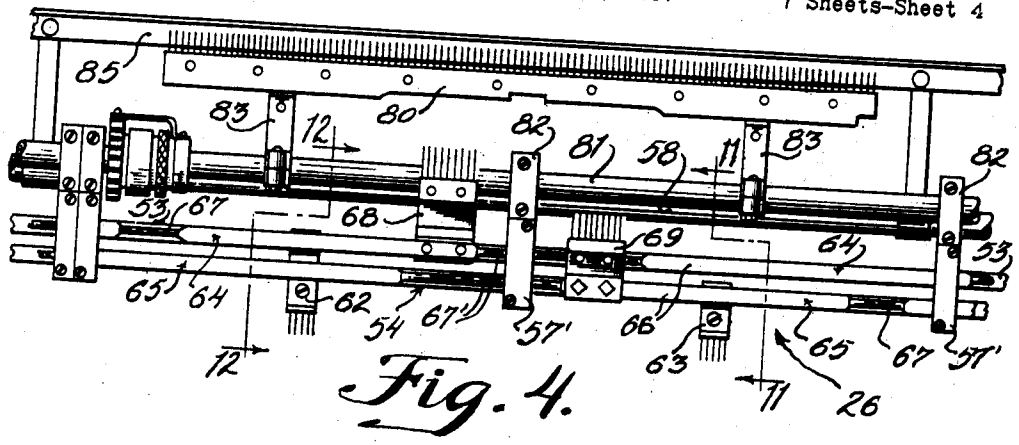

Fig. 4.

Fig. 5.

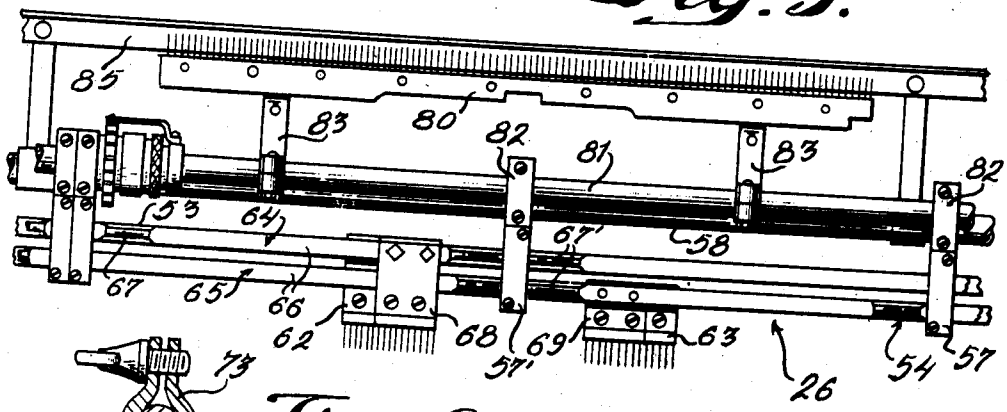

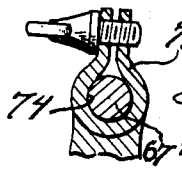

Fig. 8.

Fig. 6.

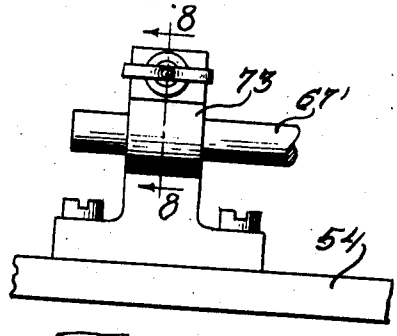

Fig. 7.

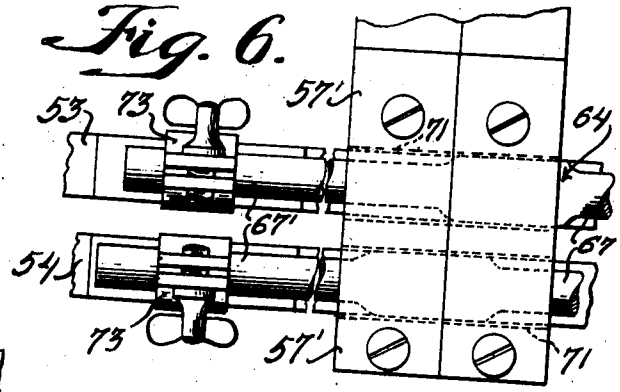

INVENTOR

Harry W. Roesener.

BY

William R. Smith

ATTORNEY

Oct. 11, 1938. H. W. ROESENER 2,132,496

FLAT KNITTING MACHINE

Filed Sept. 4, 1937 7 Sheets-Sheet 5

Fig. 9.

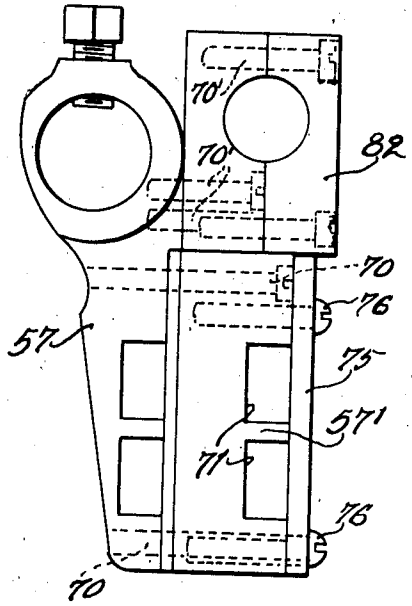

Fig. 10.

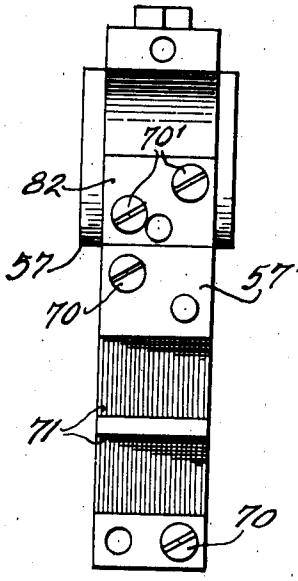

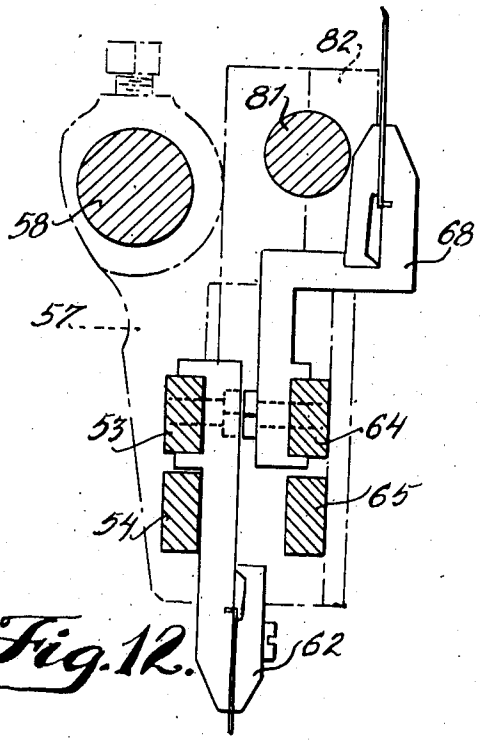

Fig. 12.

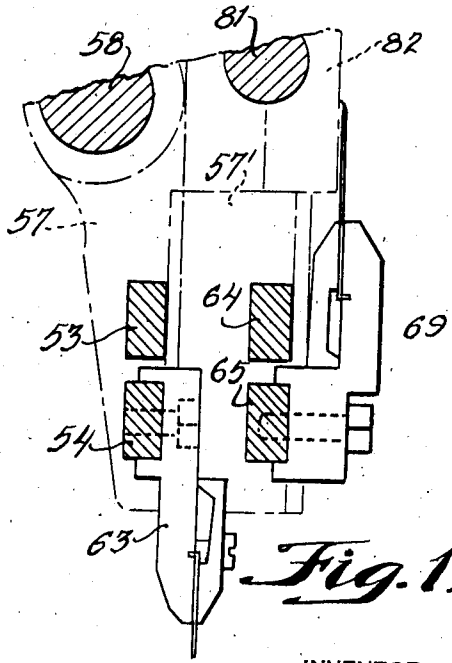

Fig. 11.

INVENTOR
Harry W. Roesener.
BY
William R. Smith
ATTORNEY

Oct. 11, 1938. H. W. ROESENER 2,132,496

FLAT KNITTING MACHINE

Filed Sept. 4, 1937 7 Sheets-Sheet 6

Fig. 13.

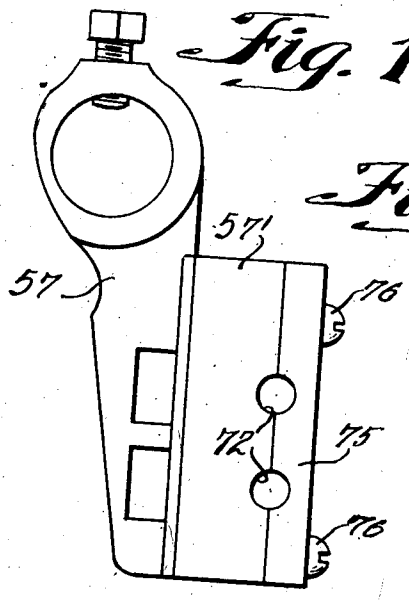

Fig. 14.

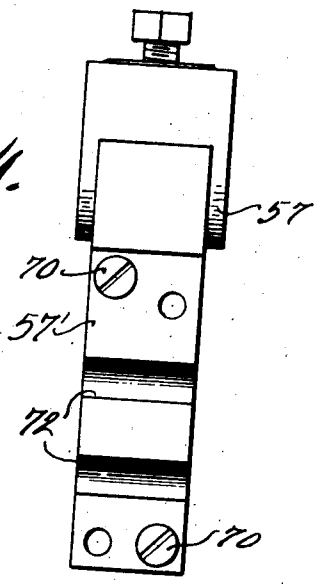

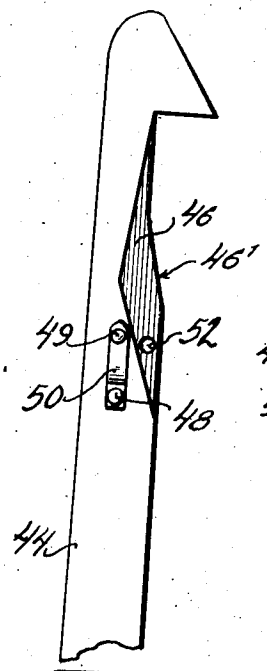

Fig. 15.

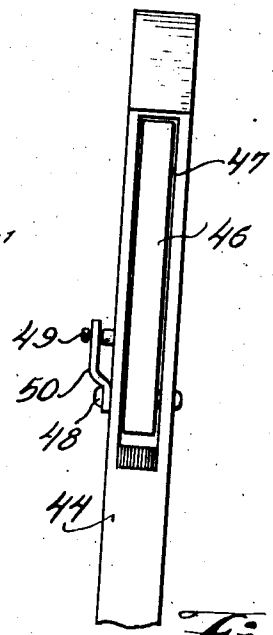

Fig. 16.

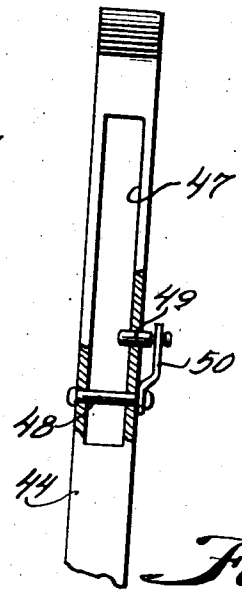

Fig. 17.

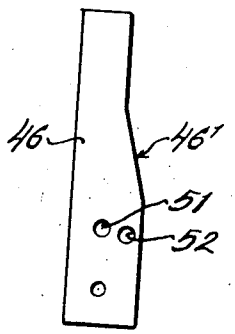

Fig. 18.

INVENTOR
Harry W. Roesener
BY
William R. Smith
ATTORNEY

Oct. 11, 1938. H. W. ROESENER 2,132,496

FLAT KNITTING MACHINE

Filed Sept. 4, 1937 7 Sheets-Sheet 7

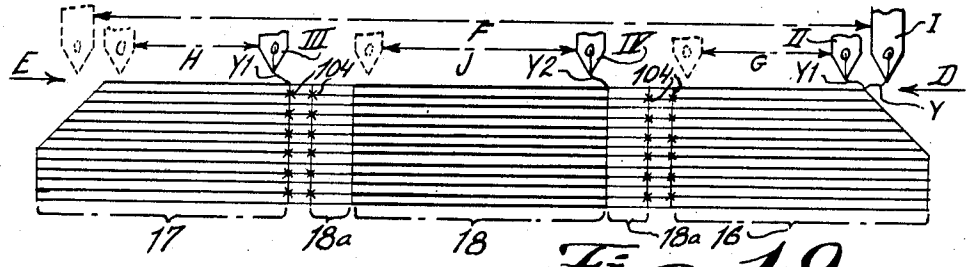

Fig. 19.

Fig. 20.

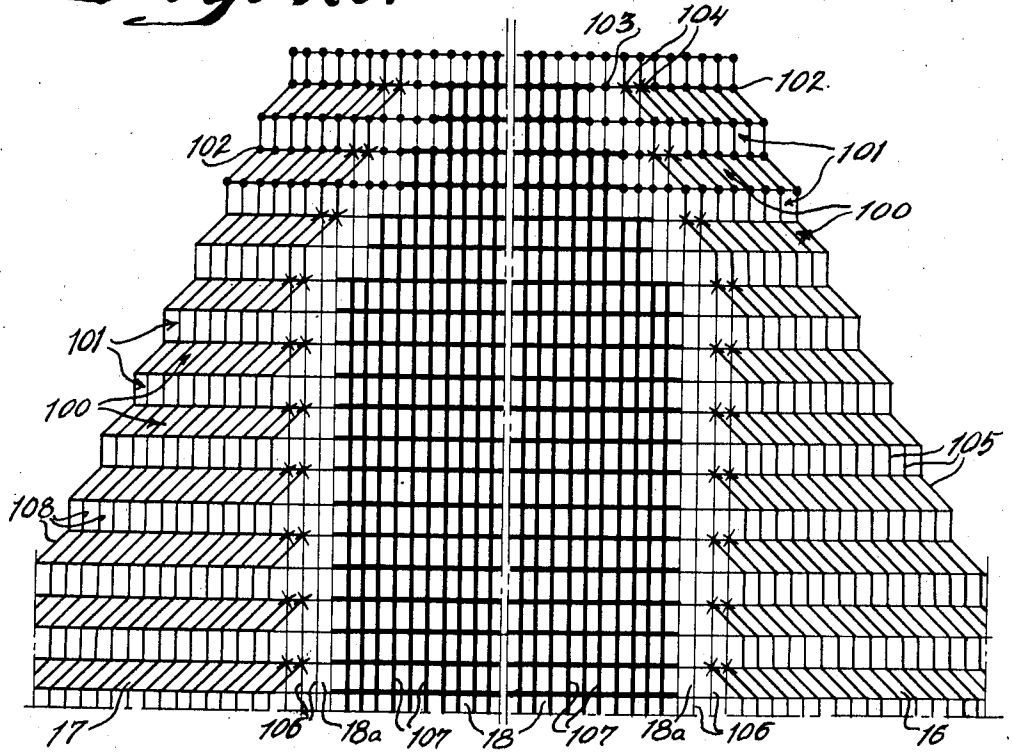

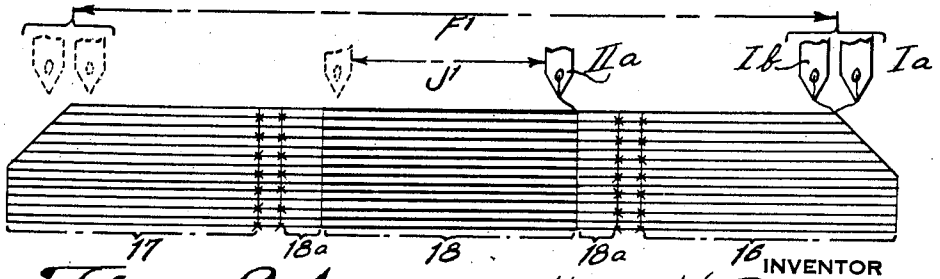

Fig. 21.

INVENTOR
Harry W. Roesener
BY
William R. Smith.
ATTORNEY

Patented Oct. 11, 1938

2,132,496

UNITED STATES PATENT OFFICE

2,132,496

FLAT KNITTING MACHINE

Harry W. Roesener, Philadelphia, Pa., assignor to Merchantville Hosiery Company, Merchantville, N. J.

Application September 4, 1937, Serial No. 162,436

14 Claims. (Cl. 66—89)

The present invention relates to flat knitting machines of the type intended to knit full fashioned hosiery, and more particularly, to a mechanism capable of being readily mounted in a full fashioned hosiery knitting machine and specially devised to produce the type of stocking shown and described in my co-pending application, Serial Number 113,416, filed November 30, 1936, of which the present application is a continuation in part.

It is the primary object of the invention to provide a mechanism capable of being readily incorporated in a full fashioned hosiery knitting machine of the usual type, commonly known as the "legger", without necessitating radical changes in the basic construction or operation thereof, whereby the transferred loop courses and narrowing courses through the leg and foot fabrics of a full fashioned stocking, to impart a characteristic design and proper shaping thereto, may be made on a single machine.

It is an important object of the invention to provide a mechanism by means of which the same general principle of narrowing may be followed in the leg, foot, and toe so that all narrowing throughout the full fashioned stocking blank may be performed by the same type of narrowing mechanism.

Another object of the invention contemplates the provision of a specially devised narrowing mechanism operable to form in required sequence the various narrowings of the leg, heel, sole, and toe fabrics, the narrowing of the toe fabric being such that yarns, reinforced to a degree greater than heretofore practiced or feasible, may be used.

It is likewise among the characteristic features of the invention to provide a mechanism operable to produce a wider reinforced toe area in a full fashioned knitted stocking, resulting in allowing improved boarding of the stocking for the subsequent neater and more even packaging thereof.

Still another meritorious feature of the invention resides in the provision of a mechanism whereby the leg and foot fabrics of full fashioned stocking toe blanks may be knitted from the same yarns in the same knitting sections of the same machine, thus eliminating the possibility of a pronounced line at the juncture of the leg and foot fabrics or of a two-tone effect therebetween and, consequently, assuring a complete full fashioned stocking blank of uniform texture and appearance throughout its sheer portion.

The invention further aims to provide a full fashioned knitting machine with a narrowing mechanism having narrowing combs each split in two sections and provided with means whereby one of the sections of each comb may be operated alone to form the leg narrowings in accordance with the present trade demand, or the two sections of each comb may be rigidly interconnected for operation as a unit to form a novel type of narrowings in the toe for imparting thereto a better fitting and stronger construction.

Moreover, the invention is characterized by the provision, in a full fashioned stocking knitting machine, of a narrowing mechanism having narrowing combs, said combs being relatively adjustable whereby the lockstitch bar usually provided upon such machine may function freely to form picot courses or ornamental designs in the welt or any other desired part of the stocking fabric.

Other important objects and advantages of the invention will be in part obvious and in part pointed out hereinafter.

In order that the invention and its mode of operation may be readily understood by persons skilled in the art, I have, in the accompanying drawings and in the detailed description based thereupon, set out a possible embodiment of the invention.

In these drawings:

Figure 1 is a diagrammatic representation of a complete full fashioned stocking blank constructed in accordance with the invention.

Figure 2 is a partial front elevation of a full fashioned hosiery knitting machine embodying my invention.

Figure 3 is an end elevation of the machine.

Figure 4 is an enlarged front elevation of a knitting section of the knitting machine illustrating the narrowing combs and lockstitch bar in one position.

Figure 5 is a view similar to Figure 4 illustrating the narrowing combs in another position.

Figure 6 is an enlarged detail in front elevation of the narrowing rod connections.

Figure 7 is a side elevation of one of the narrowing rod connections shown in Figure 6.

Figure 8 is a section taken on line 8—8 of Figure 7.

Figure 9 is a side elevation of one type of the narrowing rod brackets used in conjunction with the invention.

Figure 10 is a face elevation of the same with the cover plate removed.

Figure 11 is an enlarged section taken on line

11—11 of Figure 4 with certain parts removed for the sake of clarity.

Figure 12 is an enlarged section taken on line 12—12 of Figure 4, with certain parts removed for the sake of clarity.

Figure 13 is a side elevation of another type of bracket used in conjunction with the invention.

Figure 14 is a face elevation of the same with the cover plate removed.

Figure 15 is a partial side elevation of the reversely racking pawl constituting a part of the narrowing mechanism.

Figure 16 is a front elevation of the same.

Figure 17 is a rear elevation of the pawl with the control block removed and a certain portion broken away.

Figure 18 is a side elevation of the control block associated with the reversely racking pawl.

Figure 19 diagrammatically illustrates one method of laying the yarn in making the stocking toe section in accordance with the invention.

Figure 20 is a diagrammatic view of the toe section in which the carriers are represented by horizontal lines; the wales by vertical lines; the narrowings by crosses; and the loops by dots.

Figure 21 diagrammatically illustrates a modified method of laying the yarns in making the stocking toe section.

Having more particular reference to the drawings, wherein like characters of reference will designate corresponding parts throughout, it is pointed out that I have shown only those parts of a full fashioned knitting machine which are essential to a clear understanding of the present invention, the basic construction and operation of the machine itself being that of the usual standard machine well known in the art.

Referring particularly to Figure 1, I have diagrammatically illustrated a full fashioned stocking blank 1 having the welt 2, the leg 3, and the foot 4. Because of the construction and operation of the mechanism which constitutes the present invention and which will be clearly pointed out in the subsequent description, the entire stocking blank 1 may be knitted from the same yarns on the same knitting section of the same machine, with the result that no line of demarcation at the jointure of the leg and foot and no two-tone effect between the leg and instep fabrics can normally occur. Thus the stocking blank presents a uniform texture and appearance throughout its entire sheer area.

As shown, the welt 2 is of the common double ply type consisting of a portion of fabric formed with a medial picot course 5 along which said fabric is folded to provide the outer fabric 2*a*, the inner fabric 2*b*, and the usual picot edge 5', said outer and inner fabrics being then united at the welt juncture 6 from which the leg 3 extends.

The leg 3 has the usual flare narrowings 7 and calf narrowings 8 arranged to impart the proper shaping to the fabric.

The foot 4 includes the instep fabric 9, the heel fabrics 10 with their usual narrowings 11, the sole fabrics 12 with the usual narrowings 13, and the toe fabric 14 with my improved narrowings 15. It will be noted that the toe fabric, that is, the section represented between the lines *a*—*a* and *b*—*b* and shown and described in my co-pending application, Serial Number 113,416, filed November 30, 1936, has a construction different from the ordinary full-fashioned toe in that it does not have the usual diamond point narrowings or gussets, but consists of a pair of side fabrics 16 and 17 respectively, and in intermediate fabric or toe patch 18. The fabrics 16, 17, and 18 are defined by the fashioning lines 15 which extend walewise of the toe fabric for the major portion of their length, that is to say, the fashioning lines 15 extend walewise of the fabric to a point indicated by the dotted line *c*—*c*. From this line to the tip 19 of the blank, the fashioning lines 15 are tapered inwardly of the fabric in the manner represented at 20. Due to the formation of the narrowings 15, the toe is fashioned to properly fit the foot of the wearer. In fact, I have discovered that a stocking toe constructed in accordance with this invention produces a better fitting of the foot because, in the finished stocking, the toe patch 18 and the side fabrics 16 and 17 readily adapt themselves to the shaping of the wearer's toes.

In addition to the better fitting feature of the toe, I have found that the improved type of narrowing permits the use of a heavy reinforcing yarn in knitting the toe patch 18 and, in practice, the toe patch is reinforced to a much greater degree than the side fabrics 16 and 17 which are preferably of ordinary reinforcement.

By reason of the heavily reinforced toe patch 18, it will be appreciated that the wearing quality of the stocking is materially enhanced. Moreover, it will be noted upon reference to Figure 1 that the reinforced patch 18 covers a much greater area than the side fabrics 16 and 17. In practice, the relative areas of the toe patch 18 and side fabrics 16 and 17 are such that when the finished stocking is worn, the former substantially covers the top of the wearer's toes, whereas the latter will cover the underside of the toes. Due to the relatively large area of the highly reinforced toe patch 18 with respect to the side fabrics 16 and 17, the toe section of the finished stocking may be boarded smoothly and evenly, that is to say, due to the construction of the toe section, the same will not have the usual protruding "ears" present in the ordinary stocking. Consequently, a stocking made in accordance with this invention will board perfectly flat and, therefore, may be packaged flatly and neatly.

The heavy reinforcement of the toe patch 18 is made possible because, according to the invention, the transfer of loops in the narrowing operation is restricted to the side fabrics 16 and 17 which, as already stated, are of ordinary reinforcement.

Disposed adjacent to, and paralleling, the fashioning lines 15 are wales 106 (Figure 20) which may be knitted from either relatively light body yarn or ordinary reinforcing yarn, said wales constituting fabric panels 18*a* separating the heavy reinforced intermediate fabric 18 from the ordinary reinforced side fabrics 16 and 17, thereby imparting a certain degree of elasticity to the fabric, allowing the toe section to readily adjust itself to the foot of the wearer.

In the drawings, illustrating the mechanism which I have devised for producing the stocking blank aforesaid, the usual machine frame is represented at 21 and includes the end frames 22, the center frames 23, the beams 24 and the center bed 25.

Mounted in the usual manner about the center bed 25 are the knitting sections, one of which is represented at 26 in Figure 2 of the drawings. The knitting section includes the needle bar 27 with which the sinkers, dividers, and other knitting parts (not shown) cooperate to form the knitted loops of the fabric.

66. TEXTILES. KNITTING.

Search Room

89

Arranged at each end of the machine are the narrowing motion mechanisms, designated in their entirety for convenience herein by the reference character 28. Each narrowing motion mechanism 28 includes an outer narrowing nut 29 and an inner narrowing nut 30 in engagement with a rotatable double threaded spindle 31 whereby said narrowing nuts may be moved towards or away from each other, depending upon the rotating direction of the spindle 31.

The spindle 31 is rotated by means of a pawl and ratchet mechanism 32 comprising a ratchet wheel 33 acted upon by a pawl 34 receiving its motion from a forked lever 35 connected, as shown at 36, to one end of a rocking arm 37 having its other end pivoted to the front portion of the end frame 22 as represented at 38.

A roller 39, journalled in the intermediate portion of the rocking arm 37, is disposed for periodical engagement with a cam 40 fixed on the main cam shaft 41 supported in appropriate bearings mounted on the end and center frames 22 and 23 respectively, and extending longitudinally throughout the length of the knitting machine. The periodical engagement of the roller 37 with the cam 40 is controlled by the shifting of the main cam shaft which occurs through the function of the usual controlling chain mechanism (not shown).

Proper riding engagement between the roller 39 and cam 40 is assured by means of a spring 42 suitably connected to the arm 37 and to the machine frame.

The teeth of the ratchet wheel 33 are so spaced that the racking of said wheel will cause the narrowing nuts associated with the spindle 31 to move a distance equal to one needle, although, in accordance with the usual narrowing operation, the pawl 34 is operable to engage every other tooth of said ratchet, so that, in actuality, the spindle 31 is rotated to advance the narrowing nuts the distance of two needles.

The spindle 31 is provided with a second ratchet wheel 43 having its teeth extending in a direction opposite to that of the ratchet wheel 33 and adapted to be actuated to reversely rack the spindle 31 by means of a pawl 44 pivoted to the forked lever 35, for instance, as is shown at 45.

The teeth of the ratchet wheel 43 are likewise so spaced that the distance between each tooth is equal to the distance between each needle and the pawl 44 is normally operable to engage every other tooth whereby the spindle 31 is rotated to reversely rack said spindle the distance of two needles. At times, it may be desirable to actuate the spindle 31 so that the narrowing nuts will be reversely racked the distance of one needle only.

In accordance with the present invention and for the purpose above stated, the pawl 44 is provided with means adjustable to vary the action of said pawl on its associated ratchet wheel 43, that is to say, means whereby the pawl will be caused to operate to reversely rack the spindle the distance of one or of two needles, depending upon the adjustment of said means. Different arrangements may be devised for that purpose but, as represented in the drawings, I prefer to provide a block 46 having a cam portion 46' and received in a slot 47 cut into the pawl 44 and pivoted thereto by means of a riveted bolt 48 or like element. Because of this construction, it will be understood that by moving the block 46 so that its cam portion 46' disappears within the slot 47, the pawl 44 will be free to engage every second tooth of the ratchet wheel and thus cause the narrowing nuts 29 and 30 to be racked back the distance of two needles, but when the block 46 is in the position represented in the drawings, that is, with its cam portion 46' protruding from the slot 47, said portion will ride on the ratchet wheel and, accordingly cause the pawl to miss one tooth, thereby reversely racking the narrowing nuts 29 and 30 the distance of one needle only whenever it is desired to produce single needle narrowings in the stocking blank.

The block 46 is held in its adjusted positions preferably by means of a pin 49 adapted to slide transversely of the pawl 44 and attached to a leaf spring 50 suitably secured to the side of said pawl. In turn, the block 46 is provided with a pair of spaced apertures 51 and 52, the aperture 51 being positioned to engage the pin 49 when the block is in operative position, and the aperture 52 being disposed for engagement with said pin when the block is in inoperative position. It is, of course, to be understood that the pawl 44 may be completely retracted out of operative relationship with its ratchet wheel so that no racking back will take place. The retraction of the pawl may be done manually or through the ordinary mechanism 44' (Figure 3) commonly provided on well known "legger" knitting machines.

The movements of the narrowing nuts 29 and 30, it will be understood, are for the purpose of controlling the upper narrowing rod 53 and the lower narrowing rod 54 which are the narrowing rods usually provided on the ordinary "legger" knitting machine. For that purpose, each narrowing rod 53 and 54 is provided with a stop 55 engageable with said nuts in the usual manner and springs 56 are suitably connected to the narrowing rods in order that the stops 55 thereof may be in constant engagement with the nuts 29 and 30 respectively.

The narrowing rods 53 and 54 are slidably mounted in brackets 57 fixed on the front narrowing shaft 58 suspended from arms 59 pivoted to the rear narrowing shaft 60 journalled in bearings 61 secured upon the machine frame 20.

The upper narrowing rod 53 carries a narrowing comb 62 disposed at one side of the knitting section 26, whereas the other narrowing rod 54 carries a second narrowing comb 63 positioned at the other side of the knitting section.

Thus it will be appreciated that with operation of the narrowing mechanism, the narrowing combs 62 and 63 will move towards one another, that is inwardly of the knitted fabric, to narrow and shape the same in the ordinary well known manner.

In accordance with the invention, there are also provided two additional or auxiliary narrowing rods 64 and 65 of special construction in that they are subdivided into square portions 66 and relatively short round portions 67 and long round portions 67'. One of the additional narrowing rods is associated with each narrowing rod 53 and 54 respectively and, as shown, the additional narrowing rods are positioned in superposed paralleling relation to their respective main narrowing rods 53 and 54. Each additional narrowing rod carries a narrowing comb 68 and 69 adapted to be moved and held in or out of cooperative relationship with the narrowing combs 62 and 63 respectively, in the manner to be presently explained.

The additional narrowing rods 64 and 65 are slidably supported over the companion narrowing rods 53 and 54 by means of brackets 57' fixed

to the brackets 57 by means of bolts 70, or like fastening elements.

Certain of the brackets 57' are formed with multi-sided recesses 71 corresponding to the square portions 66 and accommodating the relatively short round portions 67 of the narrowing rods 64 and 65, whereas the other brackets are formed with rounded recesses 72 for accommodating the relatively long round portions 67' of said narrowing rods. The brackets 57' include a cover 75, which cover, together with said brackets, are secured to the main bracket 57 by means of screws 76.

It will therefore be understood that by sliding the narrowing rods to a position where the round portions 67 become located within the recesses of the brackets 57', said narrowing rods may be rotated so that the narrowing combs 68 and 69 may be adjusted in an inactive position, that is, in the position represented in Figure 4, or in an active position, that is, in the position particularly shown in Figure 5. When in inactive position, the narrowing combs 68 and 69 are held therein merely by sliding the narrowing rods 64 and 65 so that the square portions 66 thereof become located within the multi-sided recesses of the brackets. In this manner, the narrowing rods 64 and 65 are prevented from rotating and, therefore, the narrowing combs 68 and 69 are positively maintained out of association with the narrowing combs 62 and 63, without any possibility of the same falling and thus causing accidental breaking of parts, while the machine is in operation.

When in active position, the additional narrowing rods 64 and 65 are controlled by the main narrowing rods 53 and 54. For that purpose, there is preferably provided a thumb screw clamping connection 73 rigidly secured to each main narrowing rod and disposed to engage the end of the corresponding additional narrowing rod as shown at 74. It will thus be understood that by tightening the clamps 73, a rigid connection is established between the associated narrowing rods and their respective narrowing combs so that the same are worked in unison.

Attention is particularly called to the fact that during the operation of the associated narrowing combs, the square portions 66 of the narrowing rods 64 and 65 assure proper alignment of the narrowing combs with the needles and the steadiness of said combs during their narrowing function.

The arrangement and mounting of the narrowing rods and combs as above described are such that they do not interfere with the proper usual operation of the lockstitch bar 80. According to the invention, the lockstitch bar 80 is so mounted on the knitting machine that when in its operative position, as shown in Figure 2, it will clear the additional narrowing rods and their combs. For that purpose, as illustrated in the drawings, the lock stitch bar shaft 81 is rotatably arranged in bearings 82 fixed onto the brackets 57 over the brackets 57', and the lockstitch bar arms 83 are shaped to overlap the narrowing rods whereby the lockstitch bar is free to operate without interference. The operation of the lockstitch bar is done in the usual way through the functioning of the ordinary well known control means 84. When the lockstitch bar is placed in inoperative position, the points are protected by the usual guard 85.

The dipping motion of the front narrowing shaft 58 is effected in the usual manner by means of a vertical lever 86 having its upper end connected to said shaft and its lower end articulated to a substantially horizontally disposed arm 87 pivotally connected, as at 88, to the front portion of the machine frame 21.

The arm 87 carries a roller 89 at a point intermediate its connection with the arm 86 and the center frame 23; the roller 89 being adapted for riding engagement with the peripheral surface of a dipping cam 90 mounted on the main cam shaft 41.

From the foregoing, it will be understood that with rotation of the main cam shaft 41, the cam 90 will cause the front narrowing shaft 58 to move up and down through the interlinking connections 85 and 86, thus causing the narrowing combs to pick the loops off the needle bar 27, whereupon the narrowing mechanisms 32 function to transfer said loops a predetermined number of needles to form the various narrowings throughout the stocking blank.

It will, of course, be understood that the proper synchronized movement between the dipping motion and the transferring motion of the narrowing mechanism is had through relative adjustment of the dipping cam 90 and the ratchet operating cams 40.

In this connection, attention is particularly called to the configuration of the cam 40 which is formed with a high point P causing the forked lever 35 to remain in its up position longer than is customary in the usual function of the ordinary well known machine, in order to assure complete shifting or transferring of the loops in engagement with the narrowing combs before the racking back of the narrowing nuts occurs. In other words, since, in accordance with the invention, the racking back starts immediately with the down motion of the pawl 44 because the narrowing nuts are intended to be rotated the distance of two needles, the point P is so designed that the rearwardly racking pawl 44 will be held in elevated position until the transfer of the loops has been completed and the narrowing points have started on their upward movement and clear the sinkers.

When knitting upon my improved machine, the stocking blank represented in Figure 1, the mechanism is initially set in the position shown in Figure 2, that is, with the narrowing combs 62 and 63 out of the knitting field, the narrowing combs 68 and 69 turned to inoperative position, and the lockstitch bar 80 placed for cooperation with the needle bar 27. With the machine thus set, the fabric is started in the usual manner, that is, the operator manually makes the set-up course along line x—x by means of a welt transfer bar. The machine then knits a sufficient amount of fabric to form the double welt 2. During the knitting of the welt fabric and at a point approximately half way its length, the lockstitch bar is automatically operated through the normal function of the machine to form the picot course 5 along which the welt fabric is subsequently to be folded, thus providing the picot edge 5', the outer fabric 2a, and the inner fabric 2b. This is accomplished by manually transferring the original setting-up loops back to the needles, forming the welt juncture line 6. At this point, during the process of knitting the stocking blank, the machine is set to the position shown in Figure 4, that is, the lockstitch bar 80 is moved out of relationship with the needle bar 27 and the narrowing combs 62 and 63 brought into the

knitting field, the narrowing combs 68 and 69 remaining in their inoperative position.

The knitting of the leg 3 is then started and continued down to the top leg or flare narrowings 7, at which time the narrowing mechanism is acted upon to cause the narrowing combs 62 and 63 to engage and transfer the selvedge loops the required number of times to form said narrowings.

At the end of this narrowing operation, the narrowing mechanism goes out of action and the knitting continues to the point where the calf narrowings 8 are to commence. At this point, the narrowing mechanism again goes into action and causes the narrowing combs 62 and 63 to pick up the selvedge loops and transfer them inwardly of the fabric for a predetermined number of times in order to form said narrowings 8. The knitting is then continued to the top of the high-splice heel where the machine is stopped and the operator places into action the supplementary yarn carriers to knit the reinforced area of the high-splice. Knitting then continues to the instep line when the operator alters the operation of the yarn carriers so as to produce the heel fabrics or tabs 10, the narrowing mechanism operating during the knitting of said heel fabrics to form the narrowings 11.

After the heel fabrics 10 have been completed, the machine is stopped, the fabric removed from the needles, and retopped thereon so that the instep line and inside selvedge of the heel fabrics 10 will extend contiguously in engagement with the needle bar 27 in order that the foot fabric may be knitted thereonto.

The knitting is then carried on down to the point where the narrowings 13 begin. At this point, the narrowing mechanism functions for the required number of times to produce said narrowings 13, whereupon the knitting of the remaining portion of the foot and sole fabrics continues down to the beginning of the toe fabric where the machine is stopped and the mechanism is set in the position represented in Figure 5, that is, the auxiliary narrowing rods 64 and 65 are rotated to bring their respective narrowing combs 68 and 69 in operative relationship with the narrowing combs 62 and 63 and with the needles of the needle bar 27.

The auxiliary narrowing rods 64 and 65 are then locked to the main narrowing rods 53 and 54 by means of the clamping connection 73 so that the associated pairs of narrowing combs 62 and 68, and 63 and 69 will operate as a unit. With the machine so set, the knitting is carried on to form the toe 14.

During the knitting of the toe fabric 14, the narrowing mechanism, set as above stated, operates to form the narrowings 15 of a special novel construction more fully referred to in my co-pending application Serial Number 113,416 filed November 30, 1936. It is to be noted that the major portion of the narrowings 15 is walewise of the fabric. This is accomplished by reason of the fact that the narrowing mechanism functions to repeatedly rack in and out the distance of two needles and this type of narrowing is carried on down to line c—c, whereupon the rearwardly racking pawl 44 is thrown out of operative relationship with the narrowing mechanism so that the latter is not racked back causing the fabric to be continually narrowed in the distance of two needles for imparting a tapering formation to the remaining portion of the narrowings 15, and permitting the knitting of a complete stocking blank on one and the same machine.

Since the narrowing combs are so positioned as to engage only the side fabrics 16 and 17, it will be understood that it is possible to utilize heavy reinforcing yarns in the knitting of the toe patch 18, the loops of which never engage the points of the narrowing combs 62—68 and 63—69.

In practice, I find it advantageous to form the associated combs 62—68 and 63—69 of different widths so that the same will operate only on the required number of loops during the transfer operation.

The method of knitting the stocking toe fabric, as above stated, will be more clearly understood from Figures 19, 20, and 21. As shown in Figure 20, at the begining portion of the toe section, there is made a series of alternating narrowing and plain courses 100 and 101 respectively, for the purpose of shaping the fabric. It will appear from said figure that the shaping of the fabric is had by transferring inwardly of the fabric for the distance of two wales those loops designated by the reference character 102 which are the loops of the narrowing courses 100 normally disposed in the side fabrics 16 and 17.

Whereas the loops 102 of the narrowing courses 100 are transferred inwardly of the fabric, the remaining loops 103 of said courses, that is, the loops disposed in the intermediate fabric 18, retain their original position so that pairs of narrowing marks 104 are formed on the opposite sides of the fabric at a point between the side fabrics 16 and 17 and the intermediate fabric 18. It will be noted that the loops 103 in the intermediate section 18 are knitted from the body yarn Y, and a relatively heavy reinforcing yarn Y1, which is of a lighter weight than the reinforcing yarn Y2.

While knitting the stocking blank from the welt fabric to the toe fabric, the yarn or yarns are laid in the usual manner by the carriers, that is, the yarn or yarns are carried back and forth over the required number of needles for the required number of times to knit a sufficient number of courses for making the leg, heel, sole, and instep fabrics. As to the toe fabric, the method of laying the yarns may vary as will appear from Figures 19 and 21.

One method of laying the yarns to attain the construction of my improved toe is diagrammatically shown in Figure 19, from which it will be apparent that a set of four carriers is utilized for the formation of the fashioned portion of the toe fabric. One of the carriers I, which may be termed the main carrier, is threaded with the body yarn Y and is adapted to reciprocate over the entire width of the fabric, that is, from selvedge edge to selvedge edge, as indicated by the arrow F. Two of the carriers, designated by the characters II and III, and called the main reinforcing carriers, are each threaded with separate ordinary reinforcing yarns Y1, said yarns respectively being of the same weight but of a heavier weight than the body yarn Y. The carrier II is disposed to reciprocate over one of the side fabrics, for instance, the side fabric 16, as indicated by the arrow G, whereas the carrier III is adapted to reciprocate over the other of said side fabrics, that is, the fabric 17 as indicated by the arrow H.

The fourth and last carrier, designated by the reference character IV, and, for convenience, called the auxiliary reinforcing carrier, is threaded with relatively heavy reinforcing yarn Y2, said

yarn Y2 being of a greater weight than the main reinforcing yarns Y1. The carrier IV is arranged to reciprocate over the intermediate fabric 18, as represented by the arrow J.

With the carriers arranged in the manner aforesaid, it will be appreciated that during the initial yarn laying movement in the direction indicated by the arrow D in Figure 19, carriers I and II are moved simultaneously, thus laying their respective yarns Y and Y1 to form the series of wales 105 of the corresponding side fabric 16. Upon reaching the inner marginal edge of said side fabric, the carrier II is stopped while the carrier I continues its movement to lay its yarn for the formation of a limited number of loops which constitute the corresponding set of unreinforced wales 106 to form one of the separating panels 18a. After having laid the necessary amount of yarn to form the loops of said wales 106, the carrier I proceeds to lay its body yarn Y over the intermediate fabric 18. Simultaneously with the laying of the yarn over said intermediate fabric 18 by the carrier I, the auxiliary reinforcing carrier IV lays its heavy reinforcing yarn Y2 over said fabric so that there is formed a series of greatly reinforced wales 107 covering the entire width of said intermediate fabric 18.

After the simultaneous laying of the yarns Y and Y2 over the intermediate fabric 18, the auxiliary carrier IV is stopped but the main carrier I keeps on moving and, accordingly, again lays its body yarn Y for the formation of the few loops knitted for the formation of the second set of unreinforced wales 106 constituting the other panel 18a, after which the main carrier I and the main reinforcing carrier III move in unison to lay their respective yarns Y and Y1 for the formation of that series of wales 108 constituting the side fabric 17.

Following the laying of the yarns Y, Y1, and Y2 in the manner aforesaid, the knitting operation of the machine is accomplished in the usual well known manner and a course is formed consisting of reinforced end rows of loops made from the body yarn Y and the reinforcing yarn Y1, a reinforced intermediate row of loops made from the body yarn Y and the heavy reinforcing yarn Y2, and an unreinforced row of loops made from the body yarn Y and interposed between the intermediate row of loops and each end row of loops. Due to the mode of laying the various yarns, there are formed spaced inner selvedges defining the unreinforced panels 18a.

After the various yarns have been laid and knitted to form one course, as described, the carrier motion is momentarily disrupted and during this momentary disruption, the transfer of the loops in the side fabrics is performed by means of narrowing combs.

Subsequent to the transfer operation, the yarn laying movement of the carriers is resumed and yarns are again laid and knitted to form the succeeding course in the same manner as above described, with the exception that the carriers travel in the opposite direction, that is, in the direction indicated by the arrow E in Figure 19.

At the completion of this latter course, however, no transfer of loops takes place so that a plain course is knitted in alternation with the narrowing courses. At this point, attention is called to the fact that one or more additional plain courses may be knitted between each narrowing course if the insertion of such additional courses is found preferable or necessary to provide the proper or required amount of fabric for the formation of the toe pocket.

It is pointed out that the laying of the separate yarns of different weights at spaced intervals during the laying of the body yarn produces a central or intermediate heavily reinforced fabric flanked by ordinary reinforced fabrics, with a panel of unreinforced fabric interposed between the heavily reinforced and each ordinary reinforced fabric.

It will clearly appear from Figure 20 that whereas the fabric is reduced in width, the transfer of the loops in the major portion of the side fabrics 16 and 17 is not affected thereby, that is, the loops will be transferred repeatedly onto the same inner needles so that the transfer marks 104 occur in the same wales, with the result that the greater part of the fashioning lines 15 created by said transfer marks, extend walewise of the toe fabric to a point (line C—C) in close proximity to the tip of the stocking blank. When the blank has been knitted to the point represented by the line C—C, the narrowing is carried out in such a manner as to cause the innermost of the transferred loops in the successive narrowing courses to move step by step inwardly of the fabric and, at the same time, to shorten the relative stroke of the four carriers hereinbefore referred to so that the lines of transfer marks and the rows of unreinforced loops at the opposite side portions of the toe section gradually converge to the tip 19 of the blank.

Because of this constructional feature of the invention, it will be appreciated that the major portion of the wales 103 consisting of loops made from the relatively light body yarn extend on a straight line in the general longitudinal direction of the toe fabric, thus providing between the reinforced fabrics 16 and 17 and 18 well defined panels 18a of knitted fabric, the elasticity of which is not hindered by the reinforcement of the adjacent fabrics. Consequently, the preserved elasticity of the panels 18a gives to the toe that degree of stretchability sufficient to assure its fit and adaptation to the foot of the wearer. Moreover, due to the presence in the toe fabric of wales of loops constructed from a relatively light yarn with which the transferred loops are engaged, the usual thick and conspicuous rows of overlapping transferred loops of the common toe gores are eliminated resulting in not only improving the general appearance of the stocking, but also in making it more comfortable to wear.

In Figure 21, I have shown a modified method of laying the yarns in making the toe fabric in accordance with the invention.

As illustrated in said Figure 21, three carriers are used. One carrier, Ia, being the main carrier, is threaded with the body yarn. The second carrier, Ib, being the main reinforcing carrier, is threaded with the ordinary reinforcing yarn, and the third carrier IIa, being the auxiliary reinforcing carrier, is threaded with relatively heavy reinforcing yarn.

During the yarn laying movement of the carriers, the carriers Ia and Ib travel throughout the entire length of the needle bar, that is, from selvedge edge to selvedge edge of the fabric, as indicated by the arrow F', whereas the carrier IIa travels over the intermediate portion 18 of the toe fabric, as indicated by the arrow J1.

A stocking toe constructed in accordance with the latter method will accordingly have the side fabrics 16 and 17 and fabric panels 18a knitted from the body yarn, and the ordinary reinforc-

ing yarns in overlapping relation, whereas the intermediate panel 18 will be constructed with the body yarn, the ordinary reinforcing yarn, plus the heavy reinforcing yarn in order to impart to said intermediate fabric the particular construction hereinbefore referred to.

It will be understood that the control of the carriers is had through the usual carrier rod stops associated with carrier nut control mechanism 110 usually provided upon the ordinary footer knitting machines.

Manifestly, the construction shown and described is capable of several modifications without departing from the basic principle of the invention. Accordingly, those modifications coming within the scope of the sub-joined claims are to be considered within the spirit of the invention.

What I claim is:

1. In a full-fashioned stocking blank knitting machine having a lock stitch bar operable to transfer loops during the knitting of the stocking blank: a narrowing mechanism operable to narrow the leg and toe fabrics of said blank and mounted for movement from an operative to an inoperative position for the free operation of the lock stitch bar, said mechanism including narrowing comb carrying rods having alternating multi-sided and rounded portions; bearings slidably supporting said rods and having multi-sided recesses adapted to correspond to the multi-sided portions of said rods for engagement therewith to retain the combs thereon out of the way of said lock stitch bar and capable of freely accommodating the rounded portions of said rods for their positioning movements.

2. In a full-fashioned stocking blank knitting machine having a lock stitch bar operable to transfer loops during the knitting of the stocking blank: a narrowing mechanism operable to narrow the leg and toe fabrics of said blank and mounted for movement from an operative to an inoperative position for the free operation of the lock stitch bar, said mechanism including flat narrowing comb carrying rods provided with restricted portions spaced along the length thereof; bearings slidably supporting said rods and having rectangular recesses adapted to engage the flat sides of said rods for cooperation therewith, to retain the combs thereon out of the way of said lock stitch bar, and capable of freely accommodating the restricted portions of said rods for their positioning movements.

3. In a full-fashioned stocking blank knitting machine, a narrowing mechanism comprising pairs of longitudinally alignable narrowing combs, a slidable narrowing rod for each comb, certain of said rods having alternating multi-sided and rounded portions; bearings slidably supporting said rods, certain of said bearings having multi-sided recesses adapted to correspond to the multi-sided portions of said certain rods for cooperation therewith to retain the combs thereon in position with respect to the remaining narrowing combs and capable of freely accommodating the rounded portions of the mentioned rods for their rotation to swing the combs therein in and out of alignment with said remaining combs.

4. In a full-fashioned stocking blank knitting machine, a narrowing mechanism comprising: pairs of longitudinally alignable narrowing combs; a slidable flat rod for each of said combs, certain of said rods having restricted portions spaced along the length thereof; bearings for slidably supporting said rods, certain of said bearings having rectangular recesses adapted to engage the flat sides of said certain rods for cooperation therewith to retain the combs thereon in position with respect to the remaining narrowing combs and capable of freely accommodating the restricted portions of the mentioned rods for their rotation to swing the combs therein in and out of alignment with said remaining combs.

5. In a full-fashioned stocking blank knitting machine, a narrowing mechanism comprising pairs of longitudinally alignable narrowing combs; a slidable narrowing rod for each comb, certain of said rods having alternating multi-sided and rounded portions; bearings slidably supporting said rods, certain of said bearings having multi-sided recesses adapted to correspond to the multi-sided portions of said certain rods for cooperation therewith to retain the combs thereon in position with respect to the remaining narrowing combs and capable of freely accommodating the rounded portions of the mentioned rods for their rotation to swing the combs therein in and out of alignment with said remaining combs; and means between said rods for locking the same together.

6. In a full-fashioned stocking blank knitting machine, a narrowing mechanism comprising: pairs of longitudinally alignable narrowing combs; a slidable flat rod for each of said combs certain of said rods having restricted portions spaced along the length thereof; bearings for slidably supporting said rods, certain of said bearings having rectangular recesses adapted to engage the flat sides of said certain rods for cooperation therewith, to retain the combs thereon in position wth respect to the remaining narrowing combs and capable of freely accommodating the restricted portions of the mentioned rods for their rotation to swing the combs therein in and out of alignment with said remaining combs; and means between said rods for locking the same together.

7. In a full-fashioned stocking blank knitting machine, a narrowing mechanism comprising pairs of main and auxiliary narrowing rods respectively carrying slidable main and auxiliary narrowing combs, said auxiliary narrowing rods having multi-sided and rounded portions; bearing slidably supporting said rods, the bearings for the auxiliary rods having multi-sided recesses adapted to correspond to the multi-sided portions of said auxiliary narrowing rods for cooperation therewith to retain the auxiliary combs thereon in position with respect to the main narrowing combs, and capable of freely accommodating the rounded portions of said auxiliary narrowing rods for their rotation to swing the auxiliary narrowing combs thereon in and out of alignment with the main narrowing combs.

8. In a full-fashioned stocking blank knitting machine, a narrowing mechanism comprising: pairs of main and auxiliary flat narrowing rods respectively carrying alignable main and auxiliary narrowing combs, said auxiliary flat narrowing rods having restricted portions spaced along the length thereof; bearings slidably supporting said rods, the bearings for the auxiliary narrowing rods having rectangular recesses adapted to engage the flat sides of the auxiliary narrowing rods for cooperation therewith to retain the auxiliary combs thereon in position with

respect to the main narrowing combs, and capable of freely accommodating the restricted portions of said auxiliary narrowing rods for their rotation to swing the auxiliary narrowing combs in and out of alignment with the main narrowing combs.

9. In a full-fashioned stocking blank knitting machine, a narrowing mechanism comprising: pairs of main and auxiliary narrowing rods respectively carrying slidable main and auxiliary narrowing combs, said auxiliary narrowing rods having multi-sided and rounded portions; bearings slidably supporting said rods, the bearings for the auxiliary rods having multi-sided recesses adapted to correspond to the multi-sided portions of said auxiliary narrowing rods for cooperation therewith to retain the auxiliary combs thereon in position with respect to the main narrowing combs, and capable of freely accommodating the rounded portions of said auxiliary narrowing rods for their rotation to swing the auxiliary narrowing combs thereon in and out of alignment with the main narrowing combs; and means carried by the main narrowing rods and engageable with the auxiliary narrowing rods for locking the same together.

10. In a full-fashioned stocking blank knitting machine, a narrowing mechanism comprising pairs of main and auxiliary narrowing rods respectively carrying slidable main and auxiliary narrowing combs, said auxiliary narrowing rods having multi-sided and rounded portions; bearings slidably supporting said rods, the bearings for the auxiliary rods having multi-sided recesses adapted to correspond to the multi-sided portions of said auxiliary narrowing rods for cooperation therewith to retain the auxiliary combs thereon in position with respect to the main narrowing combs, and capable of freely accommodating the rounded portions of said auxiliary narrowing rods for their rotation to swing the auxiliary narrowing combs thereon in and out of alignment with the main narrowing combs; and means between said rods for locking the same together.

11. In a full-fashioned stocking blank knitting machine, a narrowing mechanism comprising: pairs of main and auxiliary narrowing rods respectively carrying slidable main and auxiliary narrowing combs, said auxiliary narrowing rods having multi-sided and rounded portions; bearings slidably supporting said rods, the bearings for the auxiliary rods having multi-sided recesses adapted to correspond to the multi-sided portions of said auxiliary narrowing rods for cooperation therewith to retain the auxiliary combs thereon in position with respect to the main narrowing combs, and capable of freely accommodating the rounded portions of said auxiliary narrowing rods for their rotation to swing the auxiliary narrowing combs thereon in and out of alignment with the main narrowing combs; means between said rods for locking the same together; and mechanism associated with the main narrowing rods for imparting loop transfer movements thereto.

12. In a full-fashioned stocking blank knitting machine, a narrowing mechanism comprising: pairs of main and auxiliary narrowing rods respectively carrying slidable main and auxiliary narrowing combs, said auxiliary narrowing rods having multi-sided and rounded portions; bearings slidably supporting said rods, the bearings for the auxiliary rods having multi-sided recesses adapted to correspond to the multi-sided portions of said auxiliary narrowing rods for cooperation therewith to retain the auxiliary combs thereon in position with respect to the main narrowing combs, and capable of freely accommodating the rounded portions of said auxiliary narrowing rods for their rotation to swing the auxiliary narrowing combs thereon in and out of alignment with the main narrowing combs; means between said rods for locking the same together; and mechanism associated with the main narrowing rods for imparting loop transfer movements thereto, said mechanism including means adjustable to vary the loop transfer movements imparted to said main narrowing rods.

13. In combination with the narrowing comb carrying rods of a full-fashioned stocking blank knitting machine of the character described: auxiliary narrowing comb carrying rods having alternating multi-sided and rounded portions; bearings slidably supporting said rods, certain of said bearings having multi-sided recesses adapted to correspond to the multi-sided portions of said auxiliary rods for cooperation therewith to retain the combs thereon in position with respect to the combs carried by the narrowing rods of the knitting machine, and capable of freely accommodating the rounded portions of said auxiliary narrowing rods for their rotation to swing the combs thereon in and out of alignment with the combs carried by said narrowing rods of the knitting machine.

14. In combination with the narrowing comb carrying rods of a full-fashioned stocking blank knitting machine of the character described: auxiliary flat narrowing comb carrying rods having restricted portions spaced along the length thereof; bearings for slidably supporting said rods and having rectangular recesses adapted to engage the flat sides of said auxiliary narrowing rods for cooperation therewith to retain the combs thereon in position with respect to the combs carried by the narrowing rods of the knitting machine, and capable of freely accommodating the restricted portions of said auxiliary narrowing rods for their rotation to swing the combs thereon in and out of alignment with the combs carried by said narrowing rods of the knitting machine.

HARRY W. ROESENER.