PCT WORLD INTELLECTUAL PROPERTY ORGANIZATION
International Bureau

INTERNATIONAL APPLICATION PUBLISHED UNDER THE PATENT COOPERATION TREATY (PCT)

(51) International Patent Classification 6 : A62B 18/08

A1

(11) International Publication Number: WO 95/07734

(43) International Publication Date: 23 March 1995 (23.03.95)

(21) International Application Number: PCT/US94/08945

(22) International Filing Date: 5 August 1994 (05.08.94)

(30) Priority Data:
08/121,697 15 September 1993 (15.09.93) US

(71) Applicant: MINNESOTA MINING AND MANUFACTURING COMPANY [US/US]; 3M Center, P.O. Box 33427, Saint Paul, MN 55133-3427 (US).

(72) Inventor: BYRAM, David, C.; P.O Box 33427, Saint Paul, MN 55133-3427 (US).

(74) Agents: HANSON, Karl, G. et al.; Minnesota Mining and Manufacturing Company, Office of Intellectual Property Counsel, P.O. Box 33427, Saint Paul, MN 55133-3427 (US).

(81) Designated States: BR, CA, JP, KR, European patent (AT, BE, CH, DE, DK, ES, FR, GB, GR, IE, IT, LU, MC, NL, PT, SE).

Published
With international search report.
Before the expiration of the time limit for amending the claims and to be republished in the event of the receipt of amendments.

(54) Title: CONVENIENT "DROP-DOWN" RESPIRATOR

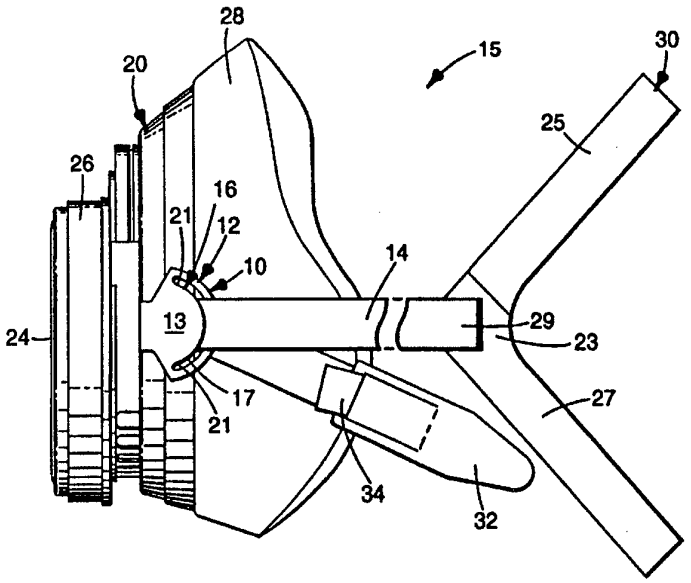

(57) Abstract

A respirator (15) has a harness (10) that allows the respirator body (20) to be conveniently disposed beneath a wearer's chin when not in use. The harness (10) includes a substantially flat, flexible strap (14) and an element (12) that contains a curved elongated slot (16). The subtantially flat, flexible strap (14) is threaded through the curved elongated slot (16). The curved configuration of the slot (16) causes the flat flexible strap (14) to be deformed to assume the curved configuration of the slot. This deformation of the strap (14) allows the strap (14) to frictionally engage element (12), and the frictional engagement allows the respirator body (20) to be incrementally withdrawn from the wearer's face so that it can be temporarily stored beneath the wearer's chin, and allows the respirator body (20) to be conveniently repositioned over the nose and mouth of the wearer by simply pulling on free ends (34) of each strap (14) and joining a buckle (32) behind the wearer's neck .

FOR THE PURPOSES OF INFORMATION ONLY

Codes used to identify States party to the PCT on the front pages of pamphlets publishing international applications under the PCT.

AT	Austria	**GB**	United Kingdom	**MR**	Mauritania
AU	Australia	**GE**	Georgia	**MW**	Malawi
BB	Barbados	**GN**	Guinea	**NE**	Niger
BE	Belgium	**GR**	Greece	**NL**	Netherlands
BF	Burkina Faso	**HU**	Hungary	**NO**	Norway
BG	Bulgaria	**IE**	Ireland	**NZ**	New Zealand
BJ	Benin	**IT**	Italy	**PL**	Poland
BR	Brazil	**JP**	Japan	**PT**	Portugal
BY	Belarus	**KE**	Kenya	**RO**	Romania
CA	Canada	**KG**	Kyrgystan	**RU**	Russian Federation
CF	Central African Republic	**KP**	Democratic People's Republic of Korea	**SD**	Sudan
CG	Congo			**SE**	Sweden
CH	Switzerland	**KR**	Republic of Korea	**SI**	Slovenia
CI	Côte d'Ivoire	**KZ**	Kazakhstan	**SK**	Slovakia
CM	Cameroon	**LI**	Liechtenstein	**SN**	Senegal
CN	China	**LK**	Sri Lanka	**TD**	Chad
CS	Czechoslovakia	**LU**	Luxembourg	**TG**	Togo
CZ	Czech Republic	**LV**	Latvia	**TJ**	Tajikistan
DE	Germany	**MC**	Monaco	**TT**	Trinidad and Tobago
DK	Denmark	**MD**	Republic of Moldova	**UA**	Ukraine
ES	Spain	**MG**	Madagascar	**US**	United States of America
FI	Finland	**ML**	Mali	**UZ**	Uzbekistan
FR	France	**MN**	Mongolia	**VN**	Viet Nam
GA	Gabon				

CONVENIENT "DROP-DOWN" RESPIRATOR

TECHNICAL FIELD

This invention pertains to a respirator that can be conveniently disposed beneath a wearer's chin when not in use.

BACKGROUND OF THE INVENTION

There are two important reasons for wearing a respirator: to prevent impurities or contaminants from entering the wearer's breathing track; and to protect others from being exposed to pathogenic microbes and other contaminants exhaled by the wearer. When wearing a respirator for either of these reasons, occasions frequently arise which require the wearer to temporarily displace the body of the respirator from the wearer's face. For instance, the wearer may temporarily leave a contaminated area for a short time, or the wearer may wish to briefly speak to another person. When the respirator body is temporarily displaced from the wearer's face, it is desirable to keep the respirator body readily accessible so that it can be quickly retrieved and returned to its position over the wearer's nose and mouth. Otherwise, it becomes more likely that the person would not consistently wear the respirator in the work place, creating unsafe conditions for the wearer or others who may be exposed to contaminants exhaled by the wearer.

SUMMARY OF THE INVENTION

The present invention provides a new respirator which has a harness that allows the respirator body to be retained in a convenient location when removed from a wearer's face. In the respirator of the invention, the harness is attached to the respirator body and includes an element that contains a curved elongated slot and a substantially flat, flexible strap. The substantially flat, flexible strap slidably passes through the curved elongated slot in the element. The curved elongated configuration of the slot deforms the strap, causing the strap to assume the curved configuration of the slot to frictionally engage the element at the point where the strap passes through the curved elongated slot.

The use of such a harness in a respirator is particularly beneficial for temporarily storing the respirator body when not in use and for conveniently remounting the respirator body upon the wearer's face. When a wearer

desires to remove the respirator body from their face, the flexible strap can be slid through the curved elongated slot to create slack sufficient to allow the respirator body to be stored beneath the wearer's chin. When the wearer desires to return the respirator body to its position over the wearer's nose and mouth, the wearer simply pulls on the strap, and the respirator body rises up into position over the nose and mouth of the wearer. The frictional engagement between the strap and the element allows the respirator body to remain in that position until a buckle or other suitable means is engaged to more snugly secure the respirator body to the person's face. Thus, the respirator of the invention is advantageous in that: (1) the respirator body can be conveniently disposed beneath the wearer's chin when not in use; and (2) the respirator body can be provisionally supported by itself over the nose and mouth of the wearer until a more permanent securement is achieved. Both of these advantages improve the likelihood that the wearer will consistently wear the respirator in the work place. The former advantage does so by keeping the respirator body readily accessible, and the latter advantage does so by making it easier for the wearer to reposition the respirator body over their nose and mouth.

In addition to the advantages (1) and (2) described above, the invention also is advantageous in that the harness is very simple in design. The harness employs a minimal number of parts, which do not have a complicated structure and are relatively easy to manufacture.

The above and other advantages of the invention are more fully shown and described in the drawings and detailed description of this invention, where like reference numerals are used to represent similar parts. It is to be understood, however, that the description and drawings are for the purposes of illustration only and should not be read in a manner that would unduly limit the scope of this invention.

BRIEF DESCRIPTION OF THE DRAWINGS

FIG. 1 is an isometric view, partially illustrating a harness **10** in accordance with the present invention.

FIG. 2 is an isometric view of a respirator **15** in accordance with the present invention.

FIG. 3 is a partially broken front view of a respirator **15** in accordance with the present invention.

FIG. 4 is a side view of a respirator **15** in accordance with the present invention.

FIG. 5 is a side view of a respirator **15** in accordance with the present invention in a drop-down position on a wearer.

FIG. 6 is a side view of a respirator **15** in accordance with the present invention in position over the wearer's nose and mouth.

DETAILED DESCRIPTION OF THE PREFERRED EMBODIMENTS

In describing the preferred embodiments of the invention, specific terminology will be used for the sake of clarity. The invention, however, is not intended to be limited to the specific terms so selected, and it is to be understood that each term so selected includes all the technical equivalents that operate similarly.

In the practice of the present invention, a respirator body can be snugly fit to a wearer's head when in use and can be conveniently located in a "drop-down" position beneath the wearer's chin by use of a respirator harness **10** partially illustrated in FIG. 1. Harness **10** includes an element **12**, and a strap **14**. Element **12** has a portion **13** that possess a curved elongated slot **16** through which strap **14** is slidably disposed. The curved elongated configuration of slot **16** allows strap **14** to frictionally engage element **12**. The term "frictionally engage" means there is resistance to sliding the strap **14** through the curved elongated slot. Stated another way, the force needed to move the strap **14** through the curved elongated slot **16** is significantly greater than the force needed to move the strap **14** through the slot **16** absent the frictional engagement. Strap **14** is a substantially flat strap; that is, one dimension is substantially smaller than the other two dimensions. Strap **14** also is flexible so that when threaded through the curved elongated slot **16**, the substantially flat flexible strap **14** assumes the slot's curved elongated configuration. Because the substantially flat, flexible strap **14** naturally desires to assume a less tortuous configuration, the strap **14** presses against the sidewall **17** of slot **16** as the strap **14** passes therethrough causing a frictional engagement therewith.

The curved slot **16** in element **12** preferably has a width that is approximately the same as the thickness of flat flexible strap **14**. A curved elongated slot **16** with such a thickness, enables a good frictional engagement to occur between element **12** and strap **14**. The frictional engagement can be

increased by decreasing the radius of the curve of slot **16** or by increasing the thickness or width of the flat flexible strap **14**. Flat flexible strap **14** preferably is made from a material that is elastic in the longitudinal direction of the strap so that a snug fit can be achieved on the wearer's face.

Referring to FIG. 2, element **12** may be hinged or otherwise bent so that when mounted to respirator body **20**, portion **13** of element **12** is swept back in a direction that points towards the wearer's face (when the respirator body **20** is donned). Curved elongated slot **16** preferably is semi-circular, with the ends **21** of the curved slot **16** pointing away from the wearer's face (when the respirator body **20** is donned). In a typical embodiment, the curved elongated slot **16** has an arc length of about 1 to 4 centimeters (cm) and a thickness of about 0.5 to 5 millimeters (mm), and the strap has a width of about 0.5 to 3 cm and a thickness of about 0.5 to 5 mm. The radius of the curve of elongated slot **16** typically is about 0.5 to 2 cm. Preferably, the radius of the curve of elongated slot **16** is less than the width of the substantially flat flexible strap **14**.

Element **12** also may possess an opening **18** (FIG. 1) or any other suitable means to allow the element **12** to be attached to the respirator body **20**. The use of the term "attached" when referring to element **12** and its relationship to a respirator body is not limited to instances where the element **12** and respirator body **20** are two separate units subsequently joined together as shown in FIG. 3. Rather, the term is defined here to include the situation where the element containing the curved elongated slot **16** simply resides in the respirator body **20** as an integral unit. In such an instance, the member **12** is part of the respirator body **20** and, in accordance with the definition just provided, is "attached to" the respirator body **20**.

Referring to FIG. 3, there is shown one way an element **12** can be attached to respirator body **20**. A set screw or rivet **22** or the like may be employed to fasten element **12** to a rigid part of the respirator body **20**. Alternatively, an adhesive, glue, or weld may be employed. Or, as stated above, the element **12** may be an integral (one-piece) part of the respirator body.

As shown in FIG. 3, the respirator **15** can have two slotted elements **12** through which a strap **14** passes. Strap **14** may be a single strap, or it may be, for example, two individual straps which can be joined together.

Referring to FIG. 4, the individual straps **14** may be joined together at a first end **29** by crown member **30**. Crown member **30** has a shape adapted to rest on a person's cranium. As shown, crown member **30** has two crown straps **25** and **27** spaced apart approximately 90 degrees and joined together at junction portion **23** where crown straps **25** and **27** meet and the first end **29** of each strap **14** is attached to member **30**. Crown straps **25** and **27** preferably are precurved to fit over and conform to the top and back of a person's head, respectively. At the second or free end **34** of straps **14** there can be provided a fastener or buckle **32** or other suitable means for joining free ends **34** of straps **14** together. The free ends **34** of straps **14** may be passed behind a wearer's neck and joined together by buckle **32** when the mask is disposed over the wearer's nose and mouth.

With particular reference to FIG. 5, the respirator body **20** may be temporarily removed from the wearer's face so that it can dangle freely and conveniently beneath the wearer's chin. The temporary off-the-face storage can be achieved by simply disengaging buckle **32** and slightly pulling on the respirator body **20**. Frictional engagement of straps **14** to curved elongated slot **16** in each element **12** preferably is great enough to suspend respirator body **20** under its own weight. When the frictional engagement is at least great enough to suspend respirator body **20**, the respirator body **20** can be incrementally withdrawn from the wearer's face and may be suspended at any location along straps **14** from the wearer's face to the free ends **34** of straps **14**.

A frictional engagement strong enough to suspend respirator body **20** under its own weight also allows the respirator to be conveniently returned to the position shown in FIG. 6. This can be accomplished by pulling on the free ends **34** of each strap **14**. When the straps **14** have been drawn through their respective curved elongated slots **16** to such an extent that the respirator body **20** is disposed over the nose and mouth of the wearer, the frictional engagement of the strap **14** with element **12** enables the respirator body **20** to be maintained in that location without continued pulling on straps **14** or holding the respirator body **20** in that position with the wearer's hand. The wearer can have both hands free to engage buckle **32** behind the wearer's neck. Thus, the harness assembly **10** is very convenient, preventing the wearer from becoming aggravated by feeling that three hands are needed to don the respirator **15**. The convenience provided by the respirator of the

invention makes it more likely that the wearer will consistently wear the respirator in the work place.

Although the respirator body **20** shown in FIGs. 2-6 comprises a filter element **24**, a filter element retainer **26**, and a soft-compliant face piece **28**, the respirator body **20** may take essentially any form, depending on the end use of the respirator. For example, the respirator body **20** may be a light-weight particulate respirator such as shown in U.S. Patents 4,536,440, 4,807,619, and 4,827,924; a light weight particulate/vapor respirator such as shown in U.S. Patent 3,971,373; or a relatively heavier vapor respirator such as shown in U.S. Patents 4,790,306, 5,033,465, and 5,062,421 (the disclosures of each of the above-cited patents are each incorporated here by reference). And, although the respirator **15** shown in FIGs. 2-6 uses two slotted elements **12** in the harness assembly **10**, it may be desirable in heavier respirators to employ more than two slotted elements; for example, four slotted elements may be used, two on each side of the respirator body, to support the respirator on the wearer's face. As another embodiment, the curved elongated slots **16** need not be attached to the respirator body. The slots **16** could be associated with the crown member **30**; for example, curved elongated slots could be provided in crown member **30** at junction portion **23** and strap **14** could be threaded through a first curved elongated slot in the crown member, to the respirator body, behind the neck of the wearer, to the respirator body again, and through a second curved elongated slot on the opposite side of the crown member. The two free ends of the strap which extend out of the respective curved slots may be joined by a buckle behind the wearer's head. Accordingly, it should be understood that this invention may take on various modifications and alterations without departing from the spirit and scope thereof. It also should be understood that this invention is not to be limited to the above-described, but is to be controlled by the limitations set forth in the following claims and any equivalents thereof.

CLAIMS:

1. A respirator which comprises:

(a) a respirator body sized to fit over the nose and mouth of a person; and

(b) a harness attached to the respirator body which comprises:

(i) an element that contains a curved elongated slot; and

(ii) a substantially flat, flexible strap slidably passing through the curved elongated slot, the curved elongated slot deforming the substantially flat flexible strap where the strap passes through the curved elongated slot to cause the strap to assume the curved configuration of the slot to frictionally engage the element.

2. The respirator of claim 1, wherein the curved elongated slot has a thickness of about 0.5 to 5 millimeters, and the strap has a thickness of about 0.5 to 5 millimeters, and wherein the substantially flat flexible strap is made of an elastic material.

3. The respirator of claims 1-2, wherein the curved elongated slot has an arc length of about 1 to 4 centimeters, and wherein the strap has a width of about 0.5 to 3 centimeters.

4. The respirator of claims 1-3, wherein the curved elongated slot is semi-circular and has a radius of about 0.5 to 2 centimeters, and wherein the radius of the curved elongated slot is less than the width of the substantially flat flexible strap.

5. The respirator of claim 1, wherein the element is attached to the respirator body and the curved elongated slot is located in a portion of the element which is swept back in a direction that points towards the wearer's face when the respirator body is donned by a wearer, and wherein the curved elongated slot is semi-circular, with ends of the curved elongated slot pointing away from the wearer's face when the respirator body is donned by a wearer.

6. The respirator of claims 1-5, further comprising first and second elements, each having a curved elongated slot located therein through which first and second substantially flat flexible straps pass, respectively.

7. The respirator of claim 6, wherein the first and second straps each have a first end which is attached to a crown member having first and second crown straps joined together at a juncture portion, the first end of the first and second straps being attached to the crown member at the juncture portion of the crown member, and wherein the first and second straps have first and second free ends which may be joined together by buckle.

8. The respirator of claim 6, wherein the frictional engagement between the flexible straps and the first and second elements is sufficient to suspend the respirator under its own weight.

9. A harness useful for supporting a respirator body over a person's nose and mouth and for permitting temporary off-the-face storage of the respirator body and repositioning of the respirator body over the nose and mouth of the wearer after the temporary off-the-face storage has ceased, which harness comprises:

a substantially flat, flexible strap; and

an element possessing a curved elongated slot through which the substantially flat, flexible strap slidably passes, the curved elongated slot deforming the substantially flat flexible strap where the strap passes through the slot to cause the strap to frictionally engage the element.

10. The harness of claim 9, wherein the curved elongated slot has a thickness of about 0.5 to 5 millimeters, the strap has a thickness of about 0.5 to 5 millimeters, and the curved elongated slot has an arc length of about 1 to 4 centimeters, and wherein the curved elongated slot is generally semicircular and has a radius of about 0.5 to 2 centimeters, the radius of the curved elongated slot being less than the width of the substantially flat flexible strap.

11. The harness of claim 10, wherein the harness includes first and second straps each having a first end which is attached to a crown member that has first and second crown straps joined together at a juncture portion, the first end of the first and second straps being attached to the crown member at the juncture portion of the crown member, and wherein the curved elongated slot is semi-circular, with ends of the curved elongated slot pointing away from the wearer's face when the respirator body is donned by a wearer.

12. A method of placing a respirator body over the nose and mouth of a person, which comprises:

pulling on a strap that assumes a tortuous configuration as the strap passes through a curved elongated slot in an element that is part of a harness assembly of a respirator, the assumed tortuous configuration causing the strap to frictionally engage the element, the strap being pulled through the curved elongated slot to an extent sufficient to position the respirator body over the nose and mouth of the person, the frictional engagement of the strap with the element being sufficient to allow the respirator to maintain the position over the nose and mouth of the person without further support from another source.

13. The method of claim 12, further comprising pulling on a second strap that assumes a tortuous configuration as the second strap passes through a second curved elongated slot in a second element that is part of the harness assembly of the respirator, and then securing a free end of the second strap to a free end of the first strap.

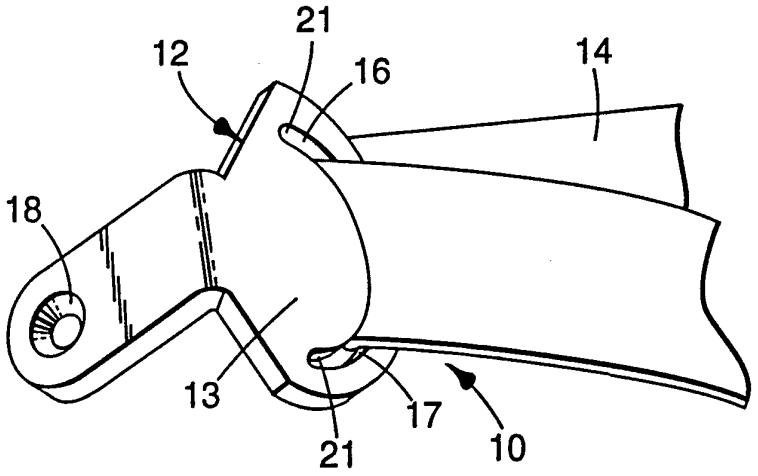

Fig. 1

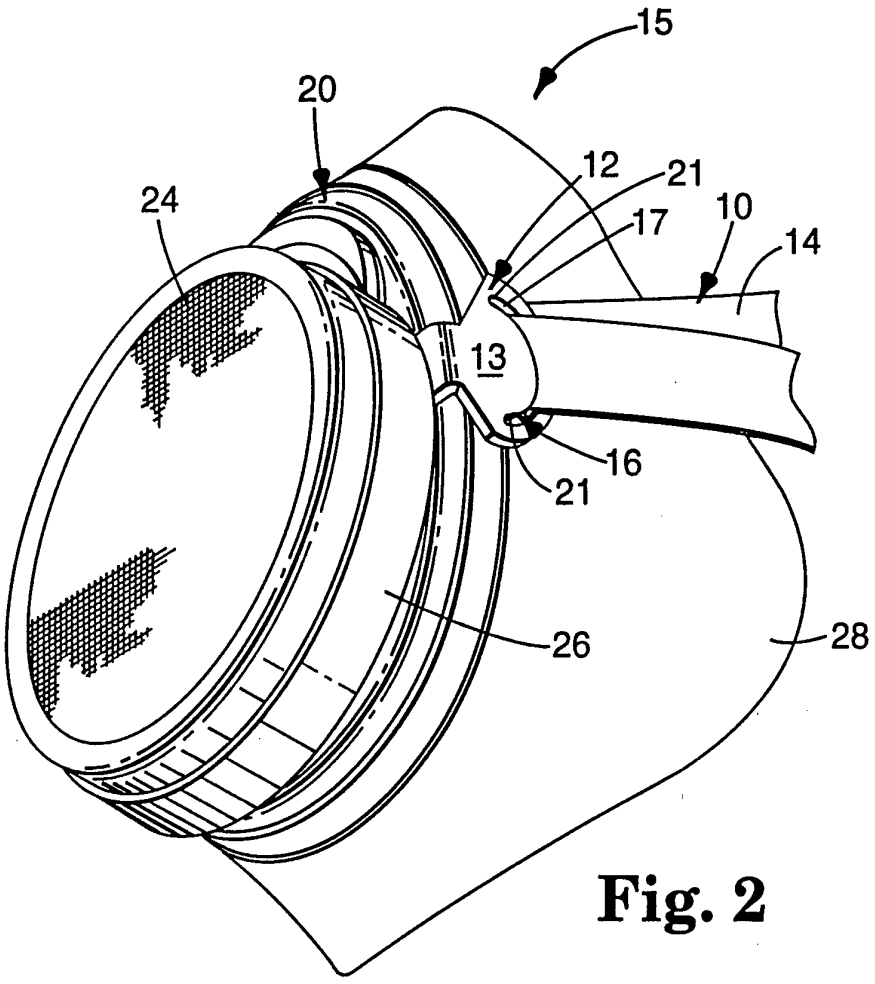

Fig. 2

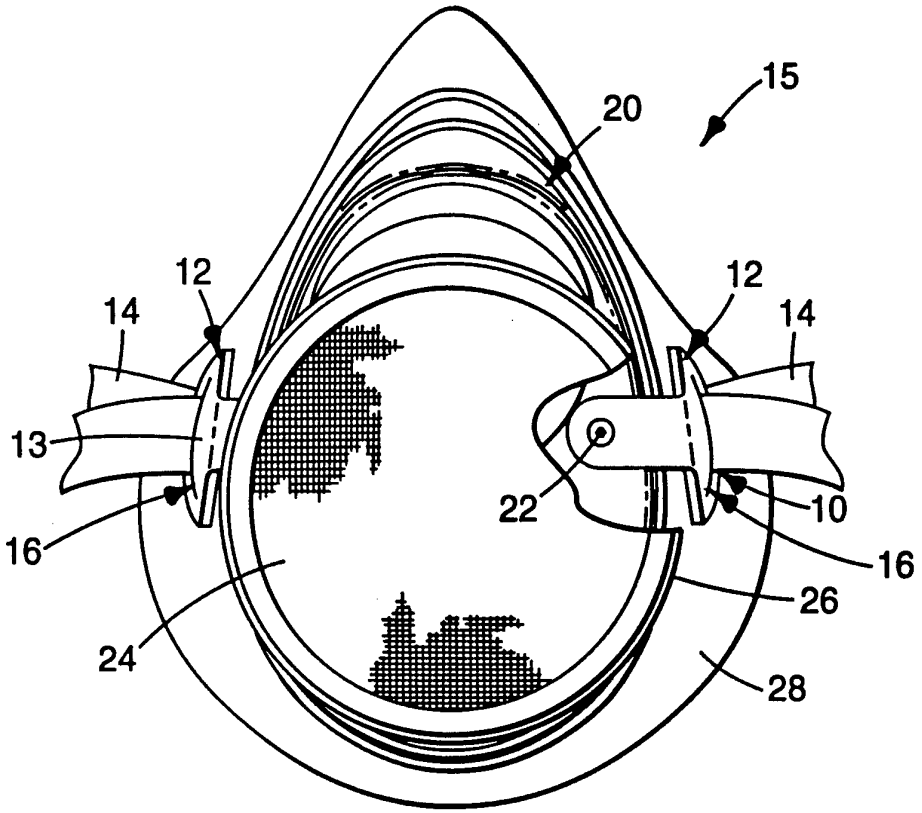
15
20
12
12
14
14
13
22
10
16
16
26
24
28

Fig. 3

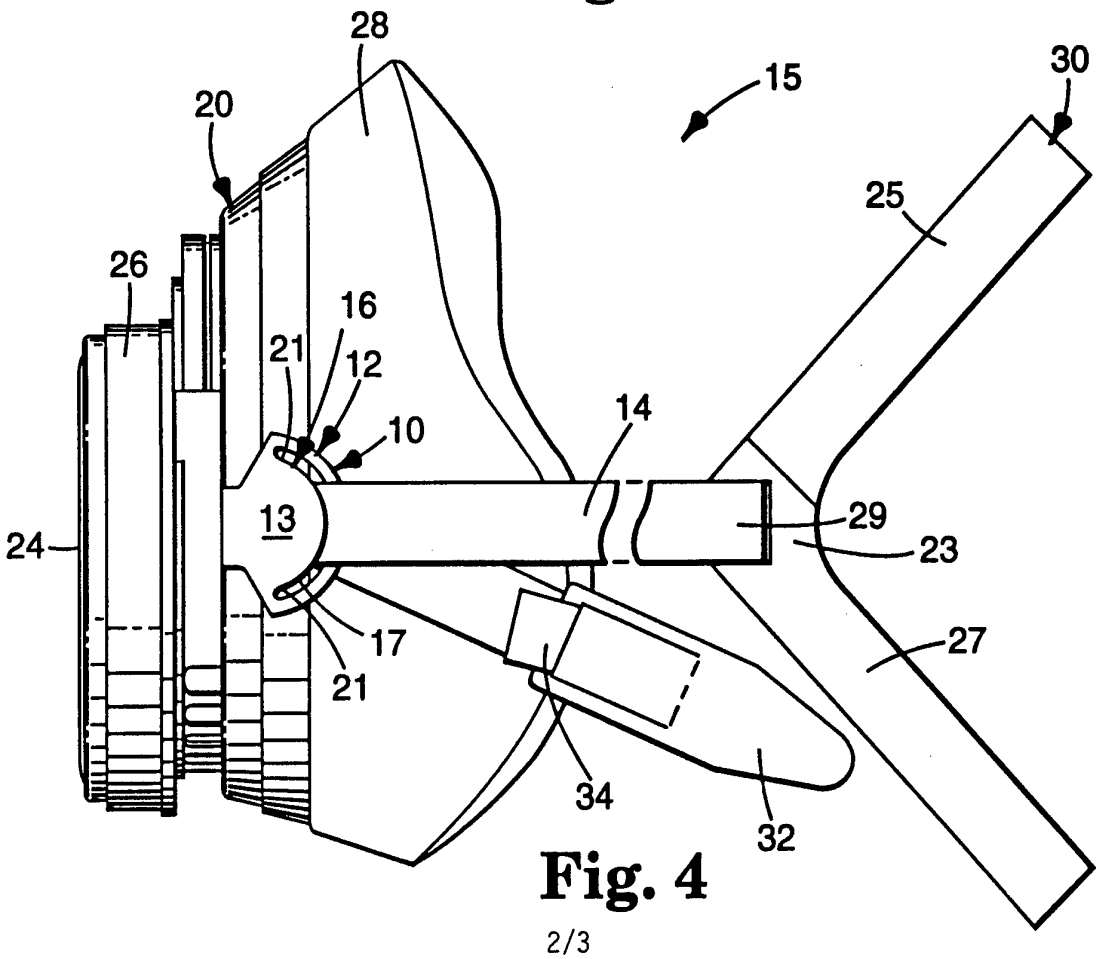
28
15
30
20
25
26
16
21
12
10
14
13
29
24
23
17
27
21
34
32

Fig. 4

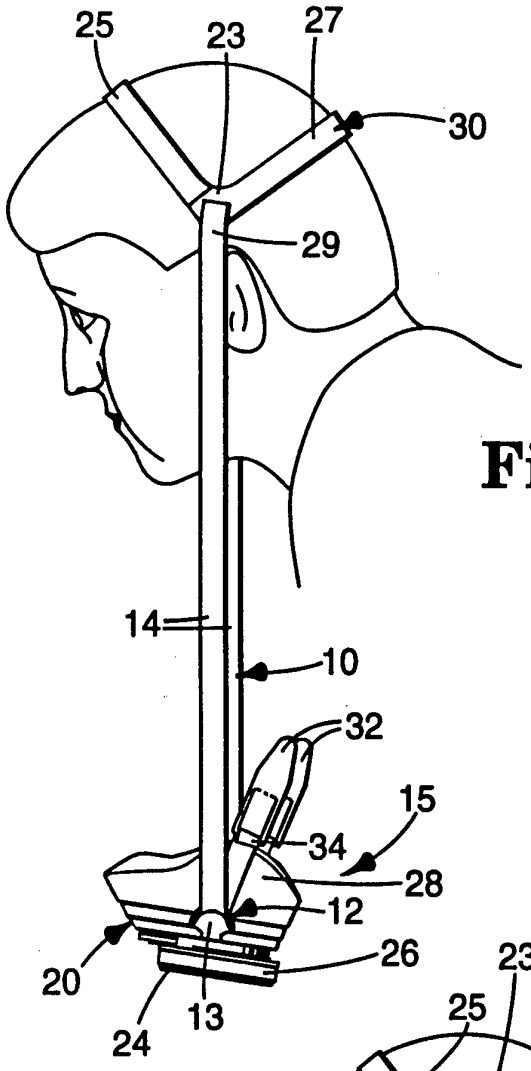
25
23
27
30
29
14
10
32
15
34
28
12
20
26
24
13

Fig. 5

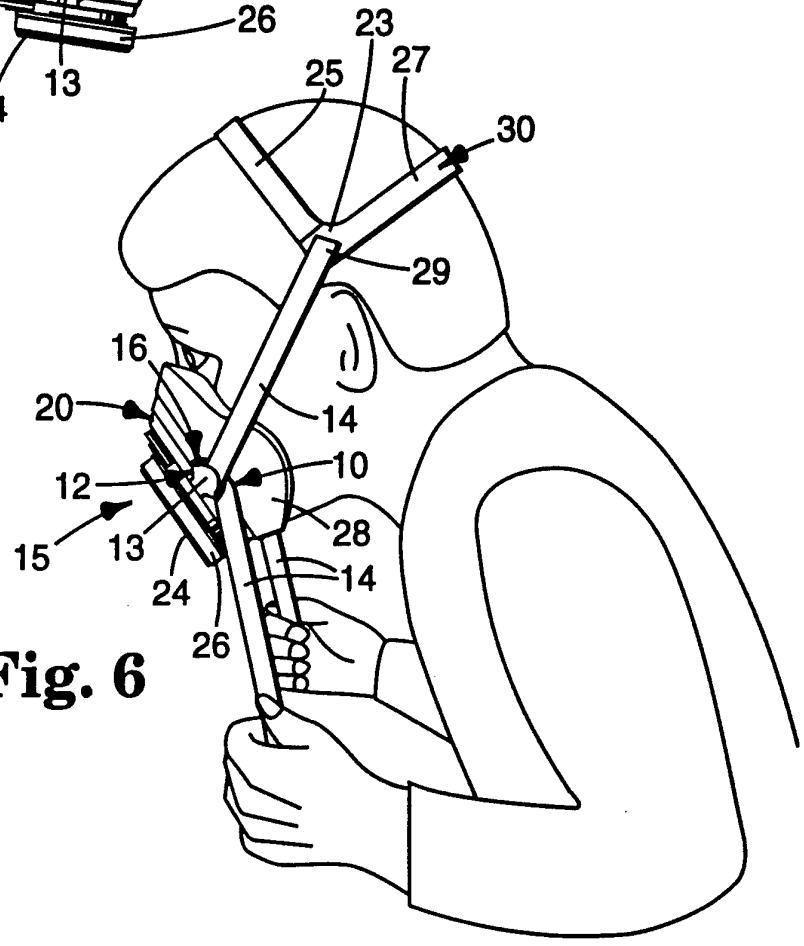
23
25
27
30
29
16
20
14
10
12
28
15
13
14
24
26

Fig. 6

INTERNATIONAL SEARCH REPORT

Int ional Application No
PCT/US 94/08945

A. CLASSIFICATION OF SUBJECT MATTER
IPC 6 A62B18/08

According to International Patent Classification (IPC) or to both national classification and IPC

B. FIELDS SEARCHED

Minimum documentation searched (classification system followed by classification symbols)
IPC 6 A62B A41D

Documentation searched other than minimum documentation to the extent that such documents are included in the fields searched

Electronic data base consulted during the international search (name of data base and, where practical, search terms used)

C. DOCUMENTS CONSIDERED TO BE RELEVANT

Category °	Citation of document, with indication, where appropriate, of the relevant passages	Relevant to claim No.
Y	US,A,4 960 121 (NELSON) 2 October 1990 see column 2, line 14 - column 6, line 34; figures 1-16	1-13
Y	US,A,2 079 581 (WHIPPLE) 4 May 1937 see page 1, left column, line 51 - page 2, left column, line 48; figures 1-7	1-13
Y	WO,A,86 01693 (MINNESOTA MINING AND MANUFACTURING COMPANY) 27 March 1986	7,13
A	see figure 1	1
A	US,A,2 928 387 (LAYNE) 15 March 1960 see column 2, line 25 - column 4, line 4; figures 1-3	1-13

☐ Further documents are listed in the continuation of box C.

☒ Patent family members are listed in annex.

° Special categories of cited documents :

"A" document defining the general state of the art which is not considered to be of particular relevance

"E" earlier document but published on or after the international filing date

"L" document which may throw doubts on priority claim(s) or which is cited to establish the publication date of another citation or other special reason (as specified)

"O" document referring to an oral disclosure, use, exhibition or other means

"P" document published prior to the international filing date but later than the priority date claimed

"T" later document published after the international filing date or priority date and not in conflict with the application but cited to understand the principle or theory underlying the invention

"X" document of particular relevance; the claimed invention cannot be considered novel or cannot be considered to involve an inventive step when the document is taken alone

"Y" document of particular relevance; the claimed invention cannot be considered to involve an inventive step when the document is combined with one or more other such documents, such combination being obvious to a person skilled in the art.

"&" document member of the same patent family

Date of the actual completion of the international search	Date of mailing of the international search report
9 January 1995	20.01.95

Name and mailing address of the ISA	Authorized officer
European Patent Office, P.B. 5818 Patentlaan 2 NL - 2280 HV Rijswijk Tel. (+31-70) 340-2040, Tx. 31 651 epo nl, Fax (+31-70) 340-3016	Triantaphillou, P

Form PCT/ISA/210 (second sheet) (July 1992)

INTERNATIONAL SEARCH REPORT

Information on patent family members

International Application No
PCT/US 94/08945

Patent document cited in search report	Publication date	Patent family member(s)	Publication date
US-A-4960121	02-10-90	NONE	
US-A-2079581		NONE	
WO-A-8601693	27-03-86	AU-B- 582781	13-04-89
		AU-A- 4631985	08-04-86
		EP-A,B 0192650	03-09-86
		JP-T- 62500426	26-02-87
		US-A- 5237986	24-08-93
US-A-2928387		NONE	