(No Model.)

S. H. SHORT.

COMMUTATOR AND MEANS FOR ASSEMBLING SAME.

No. 590,466. Patented Sept. 21, 1897.

Fig. 1.

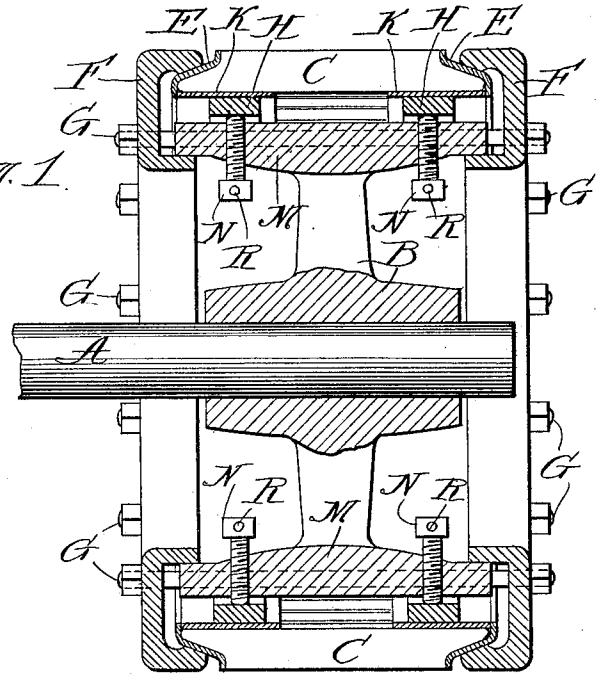

Fig. 2.

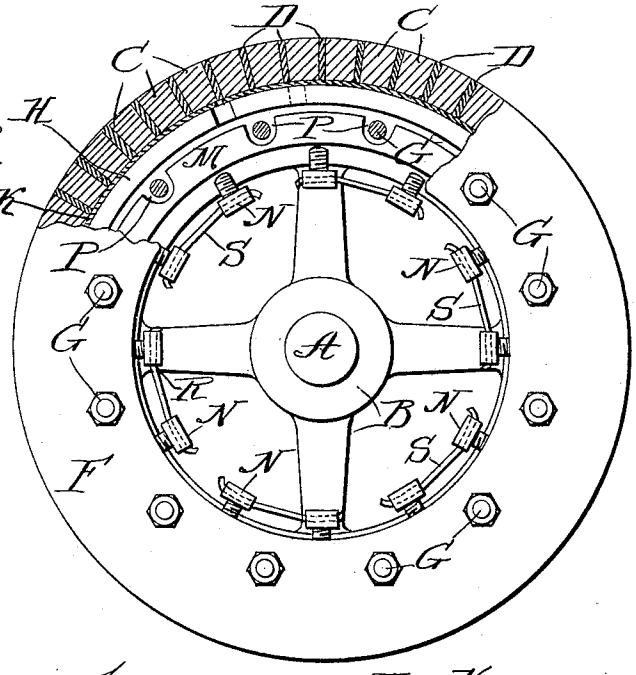

Fig. 3.

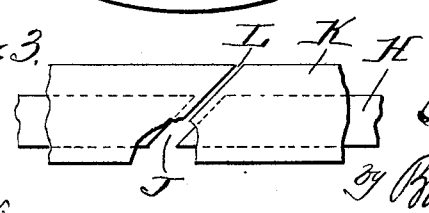

Witnesses
Wm. F. Henning
Wm. M. Rheems

Inventor
Sidney H. Short
by Brown & Darby Attys.

THE NORRIS PETERS CO., PHOTO-LITHO., WASHINGTON, D. C.

UNITED STATES PATENT OFFICE.

SIDNEY HOWE SHORT, OF CLEVELAND, OHIO.

COMMUTATOR AND MEANS FOR ASSEMBLING SAME.

SPECIFICATION forming part of Letters Patent No. 590,466, dated September 21, 1897.

Application filed July 12, 1897. Serial No. 644,226. (No model.)

To all whom it may concern:

Be it known that I, SIDNEY HOWE SHORT, a citizen of the United States, residing at Cleveland, in the county of Cuyahoga and State of Ohio, have invented new and useful Commutators and Means for Assembling the Same, of which the following is a specification.

This invention relates to commutators and means for assembling the same.

The object of the invention is to provide a construction and arrangement wherein the commutator-bars are efficiently assembled and supported and wherein a true and cylindrical external surface of the commutator is maintained.

The invention consists, substantially, in the construction, combination, location, and relative arrangement, all as will be more fully hereinafter set forth, as shown in the accompanying drawings, and finally as specifically pointed out in the appended claims.

Referring to the accompanying drawings and to the various views and reference-signs appearing thereon, Figure 1 is a central longitudinal sectional view of a commutator constructed and arranged in accordance with the principles of my invention. Fig. 2 is an end view of the same, partly in transverse section. Fig. 3 is a detached broken detail view in plan of the inner supporting-ring and overlapping insulating-ring.

The same part is designated by the same reference-sign wherever it occurs throughout the several views.

In the drawings reference-sign A designates the armature-shaft, upon which is mounted the commutator hub or spider. This hub or spider may be of any suitable or desirable construction and arrangement adapting it as a support for the commutator-bars C. These bars are assembled into ring form in any suitable or convenient manner—for instance, as set forth in my pending application, Serial No. 633,879, filed April 26, 1897—with the interposed insulating-strips D, and the cylinder thus formed is slipped upon the peripheral portion of the supporting-hub B. The commutator end insulation E, suitably shaped to conform to the contour of the ends of the commutator-bars, is then arranged in place and clamped upon the ends of the bars by the commutator-heads F by means of bolts G.

In the construction of commutators it is exceedingly important that the commutator-bars and the mica insulation between them be assembled into a cylindrical form and pressure applied to the outside of the cylindrical body, so as to force the commutator-bars and the mica together with a very great peripheral pressure, and while under this great peripheral pressure the commutator should be heated, so that any extra varnish in the mica segments may be displaced, and as it flows out from between the plates of mica additional pressure may be applied so as to force the bars against the mica plates solidly. In order to accomplish this, there must be nothing on the inner portion of the commutator-cylinder to prevent the bars from traveling inward under the external pressure which is being applied. While the bars are held in this position, the mounting must be applied in such a way as to clamp them firmly in the position attained while they are on the assembling-jig. It is also necessary after clamping the commutator-cylinder onto its hub by means of the end rings to provide a support or supports inside of the cylinder formed by the commutator-bars and mica, so that the individual bars cannot move inwardly and produce what is known as "low" bars. The commutator end rings will of course prevent the bars from moving outwardly and therefore there can be no "high" bars. Even after the commutator is completely assembled there should still remain the circumferential pressure, which prevents the mica from creeping outward while the commutator is in operation.

In order to provide a construction and arrangement wherein an efficient support is provided for the internal surface of the commutator-bars and wherein a true cylindrical external surface and circumferential pressure of such is insured and maintained, I arrange rings H, of suitable elastic or spring material, split diagonally, as at J, to be received within the commutator-cylinder formed by the assembled commutator-bars and mica segments, as clearly shown in Fig. 1. By splitting these rings diagonally I am enabled to compress them to a point where they may be radially inserted in the commutator-cyl-

inder. A strip or ring of insulation K, also preferably split diagonally, is interposed between the holding or supporting ring H and the inner surface of the commutator-cylinder. By splitting the insulation-rings K diagonally, as shown at L, Fig. 3, I am enabled to readily compress said rings to a point where they can be easily and readily inserted in the commutator-cylinder. In practice the diagonal slot L through the insulating-ring K is normally of smaller extent than the diagonal slot J in the holder-ring H when in its normal condition, as shown in Fig. 3. Therefore an efficient bearing of the insulation-ring against the inner surface of the commutator-bars and the point where the diagonal slot occurs is constantly maintained and good surface insulation secured.

In order to secure the desired results, it is important to provide means for suitably expanding the holder-rings H after being placed in position within the commutator-ring and after the commutator-cylinder has been placed in position upon its supporting spider or hub. It is also important that such expansion take place uniformly throughout the length of said holder-rings in order that the commutator-cylinder may be held in truly concentric and peripheral cylindric relation with respect to the axis of the armature A. To this end the spider or hub B is peripherally flanged, as at M, through which at suitable intervals are tapped radially set-screws N, having their ends arranged to abut against the inner surface of the holder-rings H. After the commutator-cylinder, with the holder-rings arranged in place therein, is placed in position on the hub or spider by suitably and successively turning up on the set-nuts N the holder-rings are expanded against the inner surface of the commutator-cylinder, thus forming an efficient support for the commutator-cylinder, holding the commutator-bars in proper relation, preventing the individual bars from being driven in, thus disturbing the true cylindrical external surface of the commutator and enabling the commutator to be rapidly and easily assembled in proper position upon its supporting-hub.

In order that the holder-rings H may not interfere with the clamping-bolts G, by which the head-plates F are clamped upon the ends of the commutator-cylinder, I provide seats or recesses P in the peripheral surface of the flanges M, in which said clamping-bolts are received below the surface of such flanges, as clearly shown in Fig. 2, thereby enabling the commutator-cylinder, with the holder-rings, to be readily and easily slipped thereover.

It is desirable to provide means for holding the set-screws N against relative turning after they are once properly adjusted. As illustrative of simple and efficient means for accomplishing this object I have shown holes or perforations R, drilled through the heads of said screws, through which I pass holding wires or rods S. In practice it is sufficient that two adjacent set-screws be thus locked together.

Having now set forth the object and nature of my invention and a form of apparatus embodying the same and having described the construction, function, and mode of operation thereof, what I claim as new and useful and of my own invention, and desire to secure by Letters Patent of the United States, is—

1. In a commutator, the combination with a hub or spider, a commutator-cylinder mounted thereon, and an expansible ring interposed between said commutator-cylinder and said hub, as and for the purpose set forth.

2. In a commutator, a hub or spider, a commutator-cylinder mounted thereon, a split ring interposed between said commutator-cylinder and said hub or spider, and means for expanding said split ring, as and for the purpose set forth.

3. In a commutator, a hub or spider, a commutator-cylinder mounted thereon, a split ring interposed between said hub or spider and said commutator-cylinder, and set-screws passed through said hub or spider and impinging against said split ring, as and for the purpose set forth.

4. In a commutator, a hub or spider, a commutator-cylinder mounted thereon, a diagonally-split ring interposed between the hub and the commutator-cylinder and a diagonally-split ring of insulation interposed between the split ring and the commutator-cylinder, as and for the purpose set forth.

5. The combination with a hub or spider and a commutator-cylinder, of a diagonally-split holder-ring and a diagonally-split insulation-ring, the slot in the insulation-ring being of smaller extent than that through the holder-ring, as and for the purpose set forth.

6. The combination with a hub or spider having a grooved periphery, of a commutator-cylinder mounted thereon, clamping-heads for said cylinder and securing-bolts for said heads, said bolts arranged to be received in the grooves in said periphery, as and for the purpose set forth.

7. The combination with a hub or spider, having grooves in its outer periphery, of a commutator-cylinder mounted thereon, clamping-heads for said cylinder, securing-bolts for said heads, said bolts arranged in said grooves, and a holder-ring interposed between said hub or spider and commutator-cylinder, as and for the purpose set forth.

8. In a commutator, a commutator-cylinder, a supporting-hub therefor, said hub provided with a peripheral flange and an expansive ring interposed between the outer surface of said peripheral flange and the inner surface of said commutator-cylinder, as and for the purpose set forth.

9. In a commutator, a commutator-cylinder, a peripherally-flanged supporting-hub therefor, an expansive ring interposed between said flange and commutator-cylinder, set-screws tapped through said flange and

impinging against the inner surface of said split ring, as and for the purpose set forth.

10. In a commutator, a commutator-cylinder, a peripherally-flanged supporting-hub therefor, an expansive ring interposed between said flange and commutator-cylinder, set-screws tapped through said flange and impinging against the inner surface of said split ring, and means for locking said set-nuts in adjusted position, as and for the purpose set forth.

In witness whereof I have hereunto set my hand, this 9th day of July, 1897, in the presence of the subscribing witnesses.

SIDNEY HOWE SHORT.

Attest:

M. A. KENSINGER,

JOHN J. BEVER.