A. E. BATTLE.

APPARATUS FOR USE IN AND IN CONNECTION WITH ELECTROLYTIC PROCESSES.

APPLICATION FILED MAY 24, 1915.

1,191,386. Patented July 18, 1916.

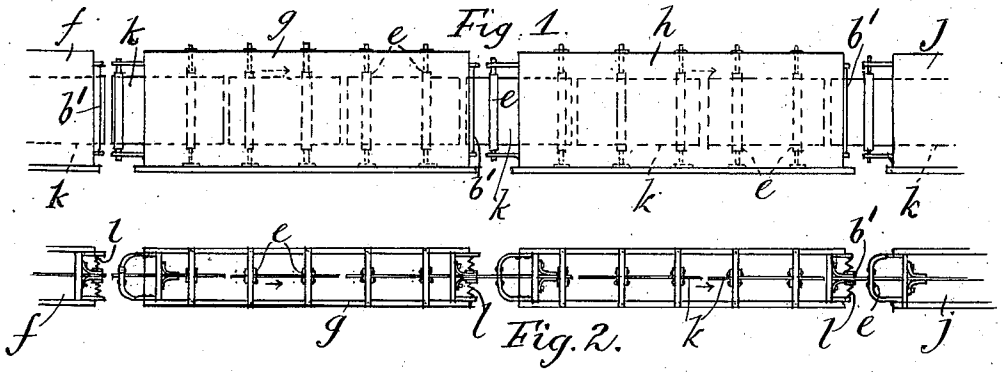

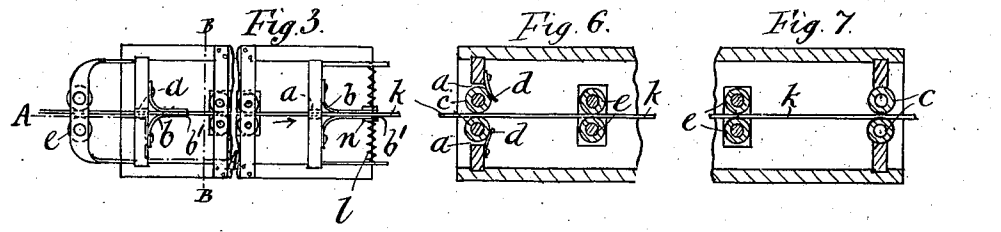

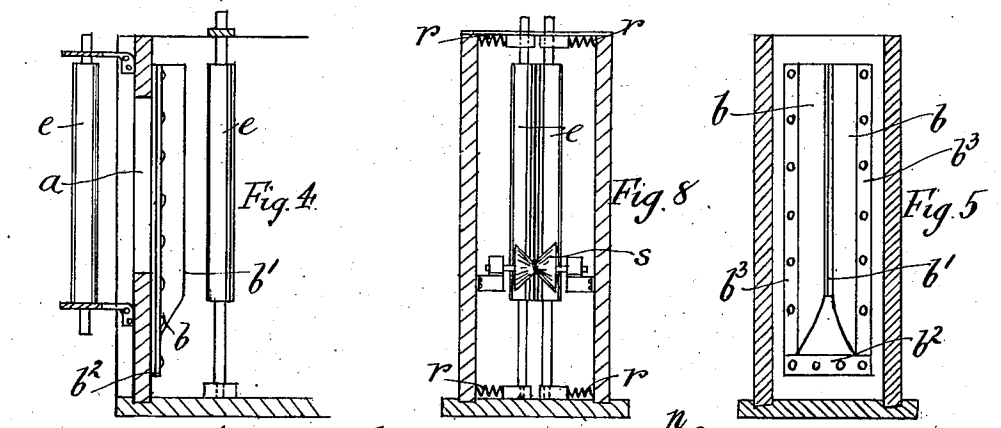

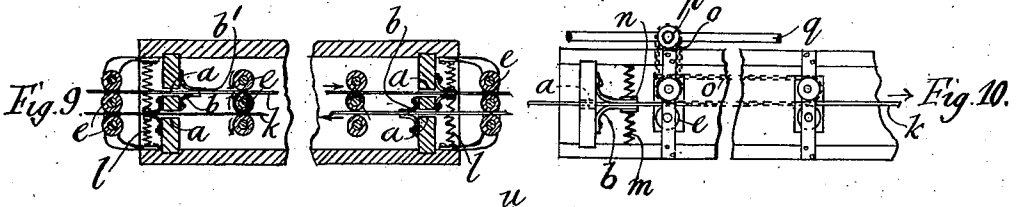

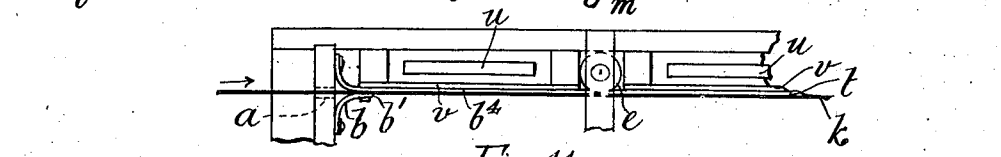

Witnesses:
H. T. Phee
S. H. Webb.

Inventor:
A. E. Battle.
By H. T. Phee Attorney.

UNITED STATES PATENT OFFICE.

ALBERT ERNEST BATTLE, OF ALDGATE, LONDON, ENGLAND.

APPARATUS FOR USE IN AND IN CONNECTION WITH ELECTROLYTIC PROCESSES.

1,191,386. Specification of Letters Patent. Patented July 18, 1916.

Application filed May 24, 1915. Serial No. 30,227.

To all whom it may concern:

Be it known that I, ALBERT ERNEST BATTLE, subject of George V, King of Great Britain and Ireland, and residing at Newlyn House, 4 and 5 High street, Aldgate, in the county of London, England, have invented certain new and useful Improvements in Apparatus for Use in and in Connection with Electrolytic Processes, of which the following is a specification.

This invention is concerned with apparatus for handling work in the form of thin sheets or plates, in various electrolytic and similar processes, such as the electro-deposition of metal on to such surfaces, the removal of a surface metal from thin sheets, as for instance tin from tinned plate and the cleaning or pickling of metal sheets by an electrolytic or chemical process.

According to this invention the sheets are fed into and out of the electrolyte or solution through a slit or opening or elongated valve by means of rollers or similar means, so that the sheets enter or leave the vat, as the case may be, below the level of the solution. The rollers and slits are arranged so that the path of the sheets or plates can be continuous through a series of vats, in which such operations as pickling, washing electro-depositing and the like may be carried out. Thus, if this path is horizontal, the sheets or plates will enter and leave the various vats through slits in the ends of the vats. If the path is a vertical one, the various vats may be placed one above the other and the sheets or plates may enter through slits in the bottom and leave at the open top of the vat. Of course the direction may be reversed and the sheets made to enter at the top and leave by the slit at the bottom.

In order that my invention may be clearly understood and readily carried into effect, I will proceed to describe one form of it with reference to the accompanying drawings, in which like letters of reference indicate like parts in all the views.

Figure 1 shows in elevation an arrangement of vats adapted for a series of electroplating operations. Fig. 2 is a plan of Fig. 1. Fig. 3 shows in broken plan a vat having valves provided with flaps for preventing escape of the solution through the slits while the sheets are under treatment in the vat. Fig. 4 is a section on line A—A of the left-hand end of Fig. 3. Fig. 5 is a section on line B—B of Fig. 3. Fig. 6 shows in horizontal section a portion of a vat having a modified form of valve, and Fig. 7 is a similar view illustrating a further modified form of valve. Fig. 8 shows in vertical section a vat having a horizontal roller for supporting the thin sheets, also springs for keeping the vertical rollers in close engagement with the thin sheets. Fig. 9 shows in broken horizontal section a vat constructed so that two lines of work can be passed therethrough. Fig. 10 shows in broken plan a portion of a vat with means for driving the rollers. Fig. 11 shows in plan a portion of a vat designed for treating one side only of the thin sheets.

In carrying out this invention, the vat is provided at each end with a slit or slot *a* combined with suitable means for rendering it liquid-tight when the thin sheets are under treatment in the vat. Such means may comprise flexible flaps *b* covering the slit or slot *a*, as shown in Figs. 1, 2, 3, 4, 5, 9, 10, and 11, or flaps *d* and rollers *c*, as shown in Fig. 6, or rollers, *c*, only, as shown in Fig. 7.

The rollers for feeding the thin sheets through the vats are shown at *e*, and are arranged to be in close contact with one another when there is no thin sheet between them, as shown clearly in Fig. 8. The rollers *c* Figs. 6 and 7, are similarly arranged, as also are the flaps *b*, see Fig. 5. Thus, when the thin sheets enter between the flaps or rollers, as the case may be, they press tightly upon the same and thereby make a close joint.

The nose portion b^1 of the flaps is so dimensioned as to cover an appreciable area of the thin sheets in order to make a more efficient joint.

Preferably, the flaps are made of rubber, and the rollers are, in some cases, covered with the same material.

Where flaps are employed to make the joint their nose portion b^1 is directed along the line of motion of the thin sheets; this will be understood on reference to the arrows shown in the drawings. The flaps are also preferably curved at their mouth or entrance end, as shown in the drawings, so as not only to facilitate the entry of the thin sheets between them, but also to insure that their mutually opposed faces shall not be suddenly opened, but only gradually so, as the thin sheets travel forward. In this way, any undue escape of liquid is prevented. Thus, non-continuous lengths of

work are, by means of any of the forms of valve above described, enabled to be passed through the vat without any harmful loss of solution. Such valves have proved to be very efficient and, moreover, owing to their large wearing surface, very durable.

The arrangement of the vats *f*, *g*, *h*, *j*, indicated in Figs. 1 and 2, is suitable for a series of operations such as pickling (electrolytic or chemical), washing after pickling, electro-depositing, and cleaning after electro-depositing, respectively. In this arrangement the sheets or plates *k* are shown following a horizontal path through the several vats, being passed along by the rollers *e* and entering and leaving the vats below the level of the liquid.

The flaps *b* can be made from a strip of rubber, rubber insertion or similar material of a length about equal to the depth of the vat. The bottom of this strip is fastened flat against the end of the vat covering the slit as shown at b^2, Figs. 4 and 5, and the strip is then drawn in so as to form the nose or fold b^1 along its center line. When drawn in enough to give sufficient bearing surface to the folded part, the side edges are fastened to the end of the vat as shown at b^3. The rubber strip is then cut along the fold at the center line so as to form the valve through which the sheets can pass into or out of the vat. These flaps or valves can of course be molded of suitable material to the required shape instead of being made from a strip of rubber as above described.

The flaps or valves at the entrance end of the vat are placed inside so that the pressure of the liquid will keep the two parts thereof pressed toward each other and so make a watertight joint on the sheet or plate. At the other or exit end of the vat they are placed outside, and springs such as 1, (Figs. 2, 3 and 9) are provided to exert a pressure on the two parts of the valve greater than that exerted by the liquid inside, and so keep them pressed toward each other to make a watertight joint on the sheets or plates. Similar springs may of course be placed on the valves at the entrance end as shown at *m* in Fig. 10, to act in addition to the pressure of the liquid. The nose portion of the flaps may, if desired, be reinforced by strips *n* (Figs. 3, 9 and 10) of suitable material.

The feed rollers *e* are driven in any suitable manner as, for instance, by means of chains *o* and toothed wheels *p* driven from a shaft *q*, see Fig. 10.

Referring now to Fig. 6, the rollers *c*, which constitute feed-rollers, are placed in the slit or opening *a* in direct contact with the flaps *d* so that the latter press against them. This is a very suitable arrangement when very thin sheets are being handled, as they then encounter no obstable to this passage into or out of the vat. In some cases, however, when the rollers are placed in the slit or opening of the vat, the flaps may be dispensed with as shown in Fig. 7, the rollers themselves being then made to fit closely at the sides and bottom, or any suitable means of packing may be adopted to render the sides and bottom of the rollers watertight.

The rollers may be made to give electrical contact with the thin sheets, if such is required, in any of the vats, or they may be made of non-conducting material and the electrical contact made by other suitable means.

Arrangements may be made to keep the rollers pressed together by springs *r*, Fig. 8, or other suitable means. The rollers may thus be used to press on and level the deposited metal in the plating vat. Revolving and sliding brushes may be arranged to work on the surfaces of the sheets as they are passed along by the rollers.

To assist in keeping the sheets or plates in the correct path and to take the weight of them, small rollers such as the V-shaped one *s* shown in Fig. 8, may be fitted.

It is an advantage to be able to treat one side only of the metal sheets, as for instance in electro-deposited tinned plate, where no tin, or only a very slight deposit may be wanted on one side and a good deposit on the other. This may easily be done according to my invention by blocking off either entirely or partially one side of the sheets from electrolytic action. Fig. 11 shows how this may be simply arranged for by providing one of the flaps *b* with an extension b^4 extending up to the first inside roller *e*. The flap would be jointed to the bottom of the vat so that no liquid could get in behind it. Similar extended flaps would be fitted between the sets of rollers a portion of one of these being indicated at *t*. Magnets *u* may be placed behind these extended flaps so that the sheets are, by the attraction exerted by the magnets, kept in close contact with the flaps and thereby exclude the liquid.

v shows a backing for the extended flaps.

It is obvious that any number of lines of work may be passed through the vats if the latter are made wide enough. They may all pass in the same or in opposite directions, as desired, with independent sets of rollers or the rollers may be arranged to pass alternate lines in alternate directions, as shown in Fig. 9.

The anodes may also be made to pass through rollers, slits and valves in the same way as the sheets or cathodes either in the same or in opposite direction. By this means the tin from a tinned plate made by the usual method of dipping in molten tin may be entirely or partially removed and deposited on to other sheets.

I claim:—

1. In electrolytic apparatus for treating

disconnected sheet members, a vat adapted to contain liquid and having an elongated opening, self-closing flaps covering said opening, feed-rollers without and within the vat, means for keeping the feed-rollers in driving contact with the sheet members, and means for driving the feed-rollers.

2. In electrolytic apparatus for treating disconnected sheet members, a vat adapted to contain liquid and having an elongated opening at each end, self-closing flaps covering said openings, feed rollers without and within the vat, means for keeping the feed-rollers in driving contact with the sheet members, and means for driving the feed-rollers.

3. In apparatus for use in handling sheets in and in connection with electrolytic and similar processes, a vat adapted to contain solution and having an elongated opening at each end, and flaps and rollers closing said openings, said flaps being adapted to press upon said rollers.

4. In apparatus for use in handling sheets in and in connection with electrolytic and similar processes, a vat adapted to contain solution and having an elongated opening at each end, and rollers closing said openings.

5. In apparatus for use in handling sheets in and in connection with electrolytic and similar processes, a vat adapted to contain solution and having an elongated opening through which the sheet can pass, flaps covering said opening, one of said flaps having an extended portion b^4 for shielding one side of said sheets from electrolytic or chemical action while they are in motion through the vat.

6. In apparatus for use in handling sheets in and in connection with electrolytic and similar processes, a vat adapted to contain solution and having an elongated opening through which the sheets can pass, flaps covering said opening, one of said flaps having an extended portion such as b^4 for shielding one side of said sheets from electrolytic or chemical action while they are in motion through the vat, and electrical means for maintaining the sheets in close engagement with said extended portion.

7. In electrolytic apparatus for treating disconnected sheet members, a vat adapted to contain liquid and having an elongated opening at each end, flaps covering said openings, springs for pressing said flaps into close contact with the sheet members, feed-rollers without and within the vat, means for keeping the feed-rollers in driving contact with the sheet members, and means for driving the feed-rollers.

8. In electrolytic apparatus for treating disconnected sheet members, a vat adapted to contain liquid and having an elongated opening, flaps covering said opening, and means for feeding the sheet members through the vat so constructed and arranged that they cause the sheet members to be fed independently of one another.

9. In electrolytic apparatus for treating disconnected sheet members, a vat adapted to contain liquid and having an elongated opening, flaps covering said opening, and means within the vat for feeding the sheet members therethrough so constructed and arranged that they cause the sheet members to be fed independently of one another.

10. In electrolytic apparatus for treating disconnected sheet members, a vat adapted to contain liquid and having an elongated opening, flaps covering said opening, and feed rollers within the vat for feeding the sheet members therethrough so constructed and arranged that they cause the sheet members to be fed independently of one another.

In witness whereof I have hereunto set my hand in the presence of two witnesses.

ALBERT ERNEST BATTLE.

Witnesses:
JOHN FRANK BONIFACE,
W. E. YOUNG.