Feb. 3, 1942. C. P. MEUSSDORFFER 2,271,800

FIRE HOSE NOZZLE

Filed July 22, 1939 2 Sheets-Sheet 1

FIG. 1

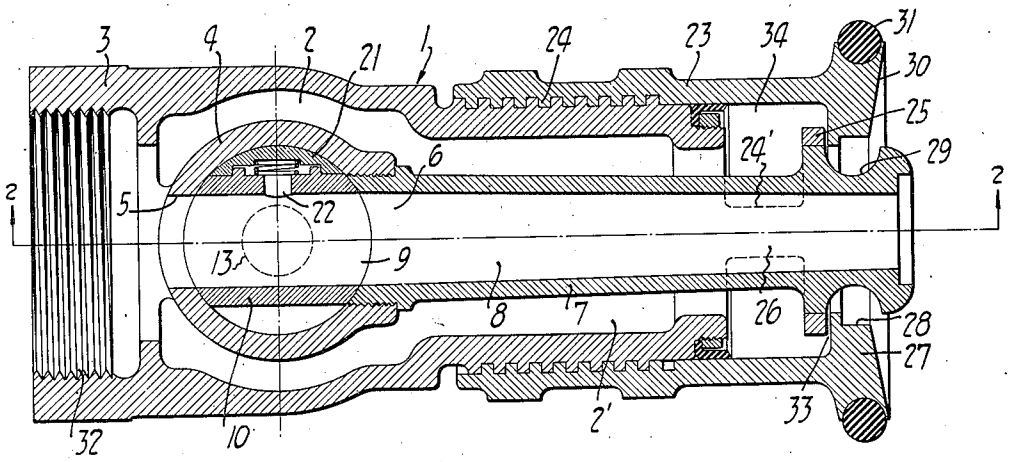

FIG. 2

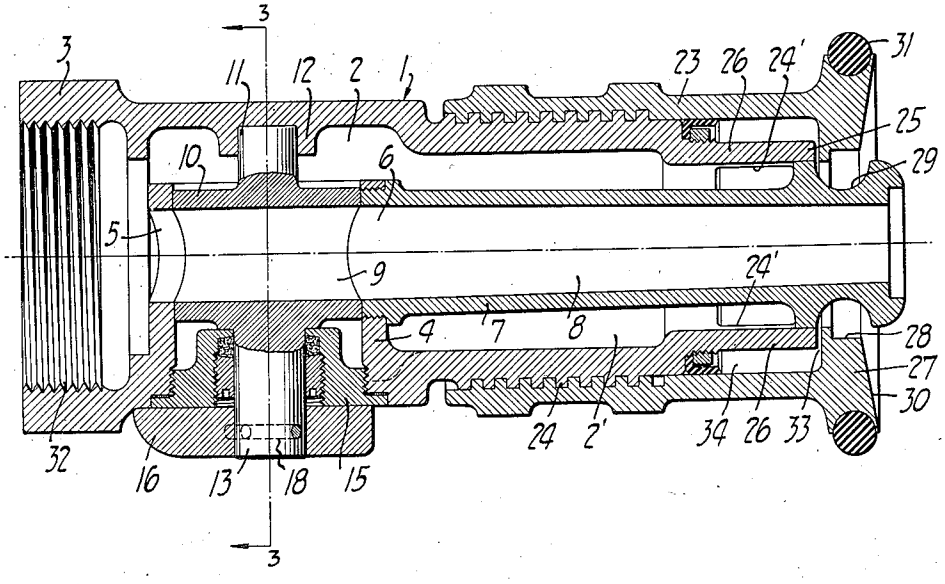

INVENTOR
Conrad P. Meussdorffer

BY
Boyken & Mohler
ATTORNEYS

Feb. 3, 1942. C. P. MEUSSDORFFER 2,271,800

FIRE HOSE NOZZLE

Filed July 22, 1939 2 Sheets-Sheet 2

FIG. 3

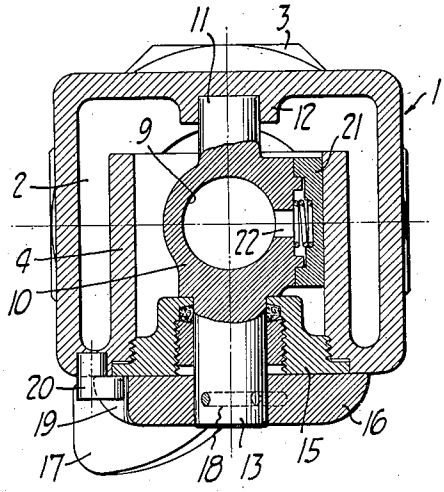

FIG. 4

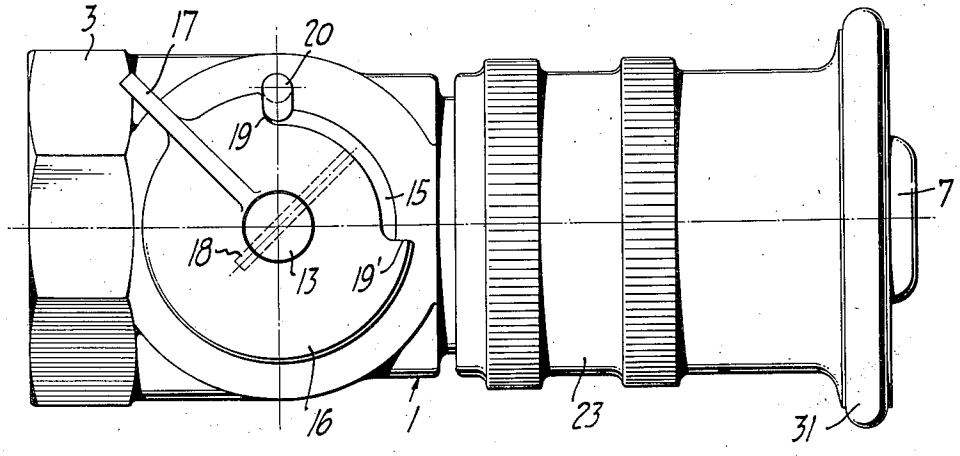

INVENTOR
Conrad P. Meussdorffer
BY
Boyken & Mohler
ATTORNEYS

Patented Feb. 3, 1942 2,271,800

UNITED STATES PATENT OFFICE

2,271,800

FIRE HOSE NOZZLE

Conrad P. Meussdorffer, Ross, Calif.

Application July 22, 1939, Serial No. 285,928

1 Claim. (Cl. 299—146)

This invention relates to nozzles, and has for its objects a nozzle for fire extinguishing purposes, which nozzle is provided with means for quickly regulating the water discharged therefrom to provide a fog curtain, or a hollow stream, or a straight, solid stream, or the combination of a straight, solid stream and a fog curtain, or to change from a fog curtain to a solid stream or vice versa, without stopping the discharge of water therefrom. Another object of the invention is a nozzle of the above nature that is readily manipulated by the fireman or operator holding the same while the water is being discharged therefrom, and which nozzle is rugged, simple, and durable.

Other objects and advantages will appear in the specification and drawings annexed hereto.

In the drawings, Fig. 1 is a sectional view taken longitudinally through the nozzle with the fog curtain and straight, solid stream effective at the same time.

Fig. 2 is a sectional view taken along line 2—2 of Fig. 1.

Fig. 3 is a sectional view taken along line 3—3 of Fig. 2, with the movable portion of the valve in elevation.

Fig. 4 is an elevational view of one side of the nozzle.

Briefly described, heretofore, what are known as "fog" nozzles, have been used for producing a fog-like curtain of water, and by manual rotation of parts of the nozzle relatively, this curtain can be changed to produce a hollow stream of water. One of such nozzles is disclosed in United States Letters Patent No. 2,089,308, August 10, 1937, although similar results have long been accomplished in ordinary garden hose nozzles.

In extinguishing and controlling fires in buildings and elsewhere, the provision of a fog-like curtain, which I term herein a "fog curtain", has been found highly desirable in smothering fire in enclosed areas, and where the main fire is from burning oil or the like in rooms, compartments, etc. However, nozzles heretofore adopted to produce a fog curtain can be manipulated to produce a stream of only one nature at a time, which nature ranges from a broken hollow stream to a fog curtain, in which the former has little force and carrying power, hence has little value other than for drenching objects or areas relatively close to the operator.

Where the nozzle of this invention is used, the operator may easily and quickly manipulate the same with one hand while holding the nozzle with the other, to produce the desired fog curtain or hollow stream, or, if suddenly confronted with a situation demanding a direct, solid stream of water, such stream may be provided while either the fog curtain or hollow stream are operative. Also, my nozzle is constructed so that the operator may supply a solid, powerful stream to the fire and if suddenly confronted by flames close at hand, he can quickly provide a fog curtain between himself and such flame for protection, while continuing to play the solid stream on any other desired point. The density and area covered by the fog curtain may, of course, be varied from a curtain extending substantially radially of the nozzle and at right angles to the axis of the latter to a generally forwardly directed dense curtain of heavy droplets and from the latter to a hollow forwardly directed stream.

In detail, the nozzle comprises a tubular, open-ended main body shell 1, cored and chambered at one end to provide a passageway 2 at the inlet end 3, extending around a cylindrical valve chamber 4 provided with aligned inlet and outlet ports 5, 6 coaxial with the central axis of the shell 1, the outlet port 6 having one end of a tubular nozzle element 7 threadedly secured therein with the central bore 8 through said element coaxial with inlet 5 and with the straight through passageway 9 in valve 10 that is rotatable in chamber 4. The bore 8 slightly tapers toward the outlet end remote from said chamber, which taper is usual in nozzles. Said outlet end projects outwardly of the end of the shell 1.

The valve 10 is provided with a stub shaft 11 at one side, extending at right angles to passageway 9, which shaft is rotatable in a bearing 12 formed in the inner side of the inlet end 3 of shell 1, and a shaft 13 at the opposite side of the valve rotatably extends through a removable bearing 15 threadedly secured in the side of the shell 1 opposite bearing 12, said bearing 15 carrying a conventional packing gland, as shown in Fig. 2.

The outer end of shaft 13 carries a disk 16 secured thereto by a pin 18, and a handle 17 on said disk is provided on said disk for turning the valve 10 to on and off position. A segment of the disk 16 is cut away, as indicated in Fig. 4 for providing shoulders 19, 19' at opposite ends thereof that are adapted to engage pin 20 carried on said shell for limiting the movement of the disk.

Also one side of valve 10 is provided with a sealing section 21 (Fig. 3) having a curved outer sealing surface adapted to fit the cylindrical inner sides of chamber 4. Said section is conventional, being carried by said valve for rotation therewith, but movable radially of bore 9 under influence of an expansion coil spring seated at

its ends in recesses on the adjacent sides of the valve and section, and a small bore 22 communicating between the inner side of section 21 and the bore 9 of valve 4 provides for admitting water under pressure against said section to effect a very tight seal when the valve is turned to position the section 21 over the inner inlet end of nozzle element 7.

An outer tubular member 23 extends at its inner end over the portion of shell 1 extending outwardly toward the discharge end of the nozzle assembly, said inner end being threadedly secured to said shell at 24 at said inner end, said threads being relatively heavy and with a relatively steep pitch for manual rotation of member 23 with respect to the shell 1 for moving said member axially with respect to the shell and with respect to nozzle element 7 which extends through said member.

The sides of shell 1 are cut away at opposite sides adjacent the outlet end of nozzle member 7 to provide relatively wide, radially directed slots 24' (Fig. 2) in said shell at said end, and axially outwardly of said slots, with respect to the axis of the shell, said shell terminates in an annular portion 25 connected with the main body of the shell by arms 26 which form the ends of the slots 24 (Fig. 1).

The outer end of tubular member 23, or the end adjacent the outlet end of the nozzle element, is formed with a radially inwardly directed flange 27 adapted to extend over the axially outwardly facing side of annular member 25, so as to seat tightly thereagainst when said member is screwed axially on shell 1 toward the inlet end 3 of the latter. Flange 27 is annular and fairly thick transversely of the plane thereof, and is of a reduced inside diameter adjacent its side adapted to seal with member 25, the radially inwardly facing side of the flange being cut away at 28 to provide this difference in diameter.

The outer discharge end of nozzle member 7 terminates slightly outwardly of the flange 27 and is formed with an annular, radially outwardly facing groove 29 of generally hemispherical cross-sectional contour, which groove is opposite flange 27 and is of a maximum width greater than the thickness of flange 27. Also the axially outwardly facing surface of flange 27, which is the outermost end of the member 23, is slightly tapered radially outwardly from the inner edges of the flange. The outer end of member 23 also is provided with a radially outwardly directed flange 30 that is grooved on its peripheral surface for receiving an annular rubber ring 31. Thus the discharge end of the nozzle is protected against injury due to striking any outside object.

In operation, with the discharge end of a conventional fire hose secured by threads 32 in the inlet end 3 of shell 1, and with the valve 10 closed and member 23 screwed slightly outwardly to provide a slight space 33 between the seating surfaces of flange 27 and member 25, the water will pass through passageway 2 and its continuation 2' and through slots 24' into annular chamber 34 between the outer end of the member 23 and nozzle member 27. From said annular chamber 34 the water will pass between the aforesaid seating surfaces and will be directed into the groove 29, and from groove 29 it will be directed radially outwardly over the inclined radially outwardly facing side of the flanges 27, 30 to form a fog curtain. Upon opening valve 10, the fog curtain will continue to be formed, but a solid stream of water will be discharged through the bore 8 in nozzle member 7, and should the operator desire a heavier fog curtain, or even a hollow stream, such results will follow from screwing member 23 further outwardly.

In the event the operator desires only a solid stream, the member 23 is screwed inwardly until the seating surfaces of flange 27 and annular member 25 are engaged and valve 10 is opened. By manipulating the member 23 to separate said seating surfaces, it is obvious that a fog curtain can be produced at will and of any desired density.

It is also apparent from the foregoing explanation, that any desired stream or combination thereof can be quickly and easily produced merely by manipulating valve 10 and member 23. The flange 27 and member 25 virtually constitute a valve, hence two valves are provided, one adjacent the discharge end and the other adjacent the inlet end.

Having described my invention, I claim:

In a nozzle of the character described having a pair of concentrically disposed tubular members spaced one within the other defining at the outer discharge end of said nozzle a pair of separate, concentrically disposed coaxial, discharge outlets of which the inner outlet of the pair is circular and fully open and the outer outlet of the pair is annular; the outer end of the inner member of said pair at said outlets projecting axially outwardly of the adjacent end of the outer member of said pair, and a radially inwardly projecting flange on said outer member at its outer end adjacent the outwardly projecting end of said inner member; a radially outwardly opening, annular, U-shaped groove on said inner member of greater width than the thickness of said flange; the lateral sides and inner edge of said flange being spaced from the sides and bottom of said groove, and said flange being disposed within the radially outwardly projected area of said groove; the inside diameter of that part of said flange adjacent the outer end of said inner member being of substantially greater diameter than the outside diameter of the said outer end of said inner member outwardly of said groove, and the adjacent, axially facing sides of said flange and said groove that are most remote from said outer ends of the inner and outer members being in overlapping relation; means supporting said outer member for axial movement from a position in which said adjacent sides are in tight engagement to a position in which said outer end of said inner member is enclosed by, but spaced from, said part of said flange.

CONRAD P. MEUSSDORFFER.