(12) INTERNATIONAL APPLICATION PUBLISHED UNDER THE PATENT COOPERATION TREATY (PCT)

(19) World Intellectual Property Organization
International Bureau

(43) International Publication Date
19 February 2004 (19.02.2004)

PCT

(10) International Publication Number
WO 2004/015639 A3

(51) International Patent Classification[7]: G07F 11/62, A61J 7/00, G07F 11/24, 11/42

(21) International Application Number: PCT/US2003/024861

(22) International Filing Date: 8 August 2003 (08.08.2003)

(25) Filing Language: English

(26) Publication Language: English

(30) Priority Data:
60/402,282 9 August 2002 (09.08.2002) US
60/458,160 27 March 2003 (27.03.2003) US

(71) Applicant: MCKESSON AUTOMATION SYSTEMS, INC. [US/US]; 700 Waterfront Drive, Pittsburgh, PA 15222 (US).

(72) Inventors: PARKS, Robert; 7189 Brighton Road, Pittsburgh, Pennsylvania (US). KAINTZ, Ryan; 1177 Prince Andrew Court, Pittsburgh, PA 15237 (US). REMIS, Steven J.; 771 Main Street, Ford City, Pennsylvania (US). AKINS, Curtis R.; 377 Daniels Road, Pineville, Louisiana (US). SHOWS, Paul Randall; 106 Scott Drive, Pineville, Louisiana (US). BEALE, Matthew Stuart; 6723 Forest Glen Road, Pittsburgh, Pennsylvania (US). HOLMES, Eric Lamont; 507 Lenox Avenue, Pittsburgh, Pennsylvania (US). SASS, Matthew; 5712 Wellesley Avenue, Pittsburgh, Pennsylvania (US).

(74) Agent: PENCOSKE, Edward, L.; Thorp Reed & Armstrong, LLP, One Oxford Centre, 14th Floor, 301 Grant Street, Pittsburgh, PA 15219 (US).

(81) Designated States *(national)*: AE, AG, AL, AM, AT, AU, AZ, BA, BB, BG, BR, BY, BZ, CA, CH, CN, CO, CR, CU, CZ, DE, DK, DM, DZ, EC, EE, ES, FI, GB, GD, GE, GH, GM, HR, HU, ID, IL, IN, IS, JP, KE, KG, KP, KR, KZ, LC, LK, LR, LS, LT, LU, LV, MA, MD, MG, MK, MN, MW, MX, MZ, NI, NO, NZ, OM, PG, PH, PL, PT, RO, RU, SC, SD, SE, SG, SK, SL, SY, TJ, TM, TN, TR, TT, TZ, UA, UG, UZ, VC, VN, YU, ZA, ZM, ZW.

(84) Designated States *(regional)*: ARIPO patent (GH, GM, KE, LS, MW, MZ, SD, SL, SZ, TZ, UG, ZM, ZW),

[Continued on next page]

(54) Title: DISPENSING DEVICE HAVING A STORAGE CHAMBER, DISPENSING CHAMBER AND A FEED REGULATOR THERE BETWEEN

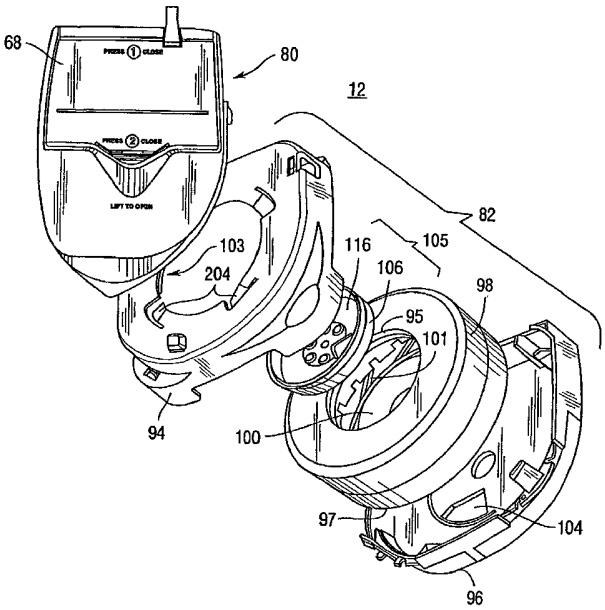

(57) Abstract: A drug dispensing device is comprised of an upper hopper having an upper opening for receiving a medicament and a lower opening. A lid covers the upper opening. A lower hopper having an upper opening and a lower opening in a bottom portion thereof is provided. The upper hopper defines a bulk storage chamber and the lower hopper defines a dispensing chamber. A rotatable dispensing disc is positioned in a lower portion of the dispensing chamber for dispensing medicament from the drug dispensing device through the lower opening in the lower hopper. A regulator is situated between the bulk storage chamber and the dispensing chamber for controlling the rate at which medicament moves from the storage chamber to the dispensing chamber. The regulator may take a variety of forms. In one embodiment, the regulator includes a valve for controlling the flow of medicament from the storage chamber to the dispensing chamber. The valve may include a member responsive to the volume of medicament in the dispensing chamber for controlling the position of the valve. The valve and member may include a trap door valve and a float, a butterfly valve and a rotatable arm, a guillotine valve and a movable arm, and a conical plunger and a wing extending from the base of the plunger. In another embodiment, the regulator may include a rotatable member having an opening therein. The rotatable member may include a cylindrical wall having an opening in a portion thereof, a plate having an opening therein, a cup shaped member defining an opening and a pair of rotatable members which together define at least one opening therein. The regulator may be configured such that the rate at which medicament moves from the storage chamber to the dispensing chamber is never zero. Further, agitating members may be provided which extend toward the upper hopper. Methods of operation are also disclosed.

WO 2004/015639 A3

Eurasian patent (AM, AZ, BY, KG, KZ, MD, RU, TJ, TM), European patent (AT, BE, BG, CH, CY, CZ, DE, DK, EE, ES, FI, FR, GB, GR, HU, IE, IT, LU, MC, NL, PT, RO, SE, SI, SK, TR), OAPI patent (BF, BJ, CF, CG, CI, CM, GA, GN, GQ, GW, ML, MR, NE, SN, TD, TG).

Published:

— *with international search report*

— *before the expiration of the time limit for amending the claims and to be republished in the event of receipt of amendments*

(88) Date of publication of the international search report:
1 July 2004

(15) Information about Correction:
Previous Correction:
see PCT Gazette No. 15/2004 of 8 April 2004, Section II

For two-letter codes and other abbreviations, refer to the "Guidance Notes on Codes and Abbreviations" appearing at the beginning of each regular issue of the PCT Gazette.

INTERNATIONAL SEARCH REPORT

Int ıal Application No
PCT/US 03/24861

A. CLASSIFICATION OF SUBJECT MATTER
IPC 7 G07F11/62 A61J7/00 G07F11/24 G07F11/42

According to International Patent Classification (IPC) or to both national classification and IPC

B. FIELDS SEARCHED

Minimum documentation searched (classification system followed by classification symbols)
IPC 7 G07F A61J B65D

Documentation searched other than minimum documentation to the extent that such documents are included in the fields searched

Electronic data base consulted during the international search (name of data base and, where practical, search terms used)

EPO-Internal, WPI Data

C. DOCUMENTS CONSIDERED TO BE RELEVANT

Category °	Citation of document, with indication, where appropriate, of the relevant passages	Relevant to claim No.
X	US 5 720 154 A (RICE DENNIS WAYNE ET AL) 24 February 1998 (1998-02-24) abstract column 1, line 48 -column 2, line 15 column 2, line 30 -column 3, line 27 column 4, line 12 - line 29 column 4, line 55 -column 5, line 8 column 5, line 40 -column 7, line 31 column 8, line 33 - line 46 column 9, line 29 -column 10, line 2 figures 1-7 claims 1,2,8-10,16,17,19 --- -/--	1-38, 45-49

[X] Further documents are listed in the continuation of box C.

[X] Patent family members are listed in annex.

° Special categories of cited documents :

"A" document defining the general state of the art which is not considered to be of particular relevance

"E" earlier document but published on or after the international filing date

"L" document which may throw doubts on priority claim(s) or which is cited to establish the publication date of another citation or other special reason (as specified)

"O" document referring to an oral disclosure, use, exhibition or other means

"P" document published prior to the international filing date but later than the priority date claimed

"T" later document published after the international filing date or priority date and not in conflict with the application but cited to understand the principle or theory underlying the invention

"X" document of particular relevance; the claimed invention cannot be considered novel or cannot be considered to involve an inventive step when the document is taken alone

"Y" document of particular relevance; the claimed invention cannot be considered to involve an inventive step when the document is combined with one or more other such documents, such combination being obvious to a person skilled in the art.

"&" document member of the same patent family

Date of the actual completion of the international search	Date of mailing of the international search report
4 May 2004	12/05/2004

Name and mailing address of the ISA	Authorized officer
European Patent Office, P.B. 5818 Patentlaan 2 NL - 2280 HV Rijswijk Tel. (+31-70) 340-2040, Tx. 31 651 epo nl, Fax: (+31-70) 340-3016	Bassanini, A

Form PCT/ISA/210 (second sheet) (January 2004)

INTERNATIONAL SEARCH REPORT

In ›nal Application No
PCT/US 03/24861

C.(Continuation) DOCUMENTS CONSIDERED TO BE RELEVANT

Category °	Citation of document, with indication, where appropriate, of the relevant passages	Relevant to claim No.
A	US 4 869 394 A (HURST KERNEY J) 26 September 1989 (1989-09-26) cited in the application abstract column 2, line 41 - line 66 column 3, line 15 - line 41 column 4, line 17 - line 49 column 5, line 37 -column 6, line 59 column 7, line 19 - line 25 figures 1,2,9 claims 1,5,16 ---	1-38, 45-49
A	US 6 161 721 A (GUERRA LAWRENCE E ET AL) 19 December 2000 (2000-12-19) cited in the application abstract column 1, line 25 -column 39 column 2, line 46 -column 3, line 32 column 3, line 43 - line 61 column 4, line 56 -column 5, line 9 column 5, line 22 -column 6, line 10 figures 1-9,16,24-26 ---	1-38, 45-49
A	US 5 897 024 A (COUGHLIN CLAIRE P ET AL) 27 April 1999 (1999-04-27) the whole document ---	1-38, 45-49
A	US 4 111 332 A (HURST KERNEY J ET AL) 5 September 1978 (1978-09-05) cited in the application the whole document -----	1-38, 45-49

FURTHER INFORMATION CONTINUED FROM PCT/ISA/ 210

Continuation of Box I.2

Claims Nos.: 39-44,50

The lack of clarity, within the meaning of Article 6 PCT, in claims 39-44 and 50 is such that a meaningful search of these claims is impossible. In particular, the different embodiments of the feed regulator defined in claims 39 and 50 do not appear to be described in the application. Therefore, the subject-matter of claims 39 and 50 lacks support by the description (Art. 6 PCT).

The applicant's attention is drawn to the fact that claims, or parts of claims, relating to inventions in respect of which no international search report has been established need not be the subject of an international preliminary examination (Rule 66.1(e) PCT). The applicant is advised that the EPO policy when acting as an International Preliminary Examining Authority is normally not to carry out a preliminary examination on matter which has not been searched. This is the case irrespective of whether or not the claims are amended following receipt of the search report or during any Chapter II procedure.

INTERNATIONAL SEARCH REPORT

ɪrnational application No.
PCT/US 03/24861

Box I Observations where certain claims were found unsearchable (Continuation of item 1 of first sheet)

This International Search Report has not been established in respect of certain claims under Article 17(2)(a) for the following reasons:

1. [ ] Claims Nos.:
because they relate to subject matter not required to be searched by this Authority, namely:

2. [X] Claims Nos.: 39-44,50
because they relate to parts of the International Application that do not comply with the prescribed requirements to such an extent that no meaningful International Search can be carried out, specifically:

see FURTHER INFORMATION sheet PCT/ISA/210

3. [ ] Claims Nos.:
because they are dependent claims and are not drafted in accordance with the second and third sentences of Rule 6.4(a).

Box II Observations where unity of invention is lacking (Continuation of item 2 of first sheet)

This International Searching Authority found multiple inventions in this international application, as follows:

1. [ ] As all required additional search fees were timely paid by the applicant, this International Search Report covers all searchable claims.

2. [ ] As all searchable claims could be searched without effort justifying an additional fee, this Authority did not invite payment of any additional fee.

3. [ ] As only some of the required additional search fees were timely paid by the applicant, this International Search Report covers only those claims for which fees were paid, specifically claims Nos.:

4. [ ] No required additional search fees were timely paid by the applicant. Consequently, this International Search Report is restricted to the invention first mentioned in the claims; it is covered by claims Nos.:

Remark on Protest

[ ] The additional search fees were accompanied by the applicant's protest.

[ ] No protest accompanied the payment of additional search fees.

INTERNATIONAL SEARCH REPORT

Information on patent family members

International Application No
PCT/US 03/24861

Patent document cited in search report		Publication date	Patent family member(s)			Publication date
US 5720154	A	24-02-1998	NONE			
US 4869394	A	26-09-1989	AU	602680	B2	25-10-1990
			AU	7079587	A	29-10-1987
			CA	1304050	C	23-06-1992
			GB	2189914	A ,B	04-11-1987
			GB	2214674	A ,B	06-09-1989
			JP	2610871	B2	14-05-1997
			JP	62260289	A	12-11-1987
US 6161721	A	19-12-2000	NONE			
US 5897024	A	27-04-1999	AU	7595498	A	10-02-1999
			CA	2293716	A1	28-01-1999
			EP	1015351	A1	05-07-2000
			WO	9903755	A1	28-01-1999
			US	6085938	A	11-07-2000
US 4111332	A	05-09-1978	BE	789821	A1	01-02-1973
			CA	997795	A1	28-09-1976
			CA	1011698	A2	07-06-1977
			CA	1011697	A2	07-06-1977
			DE	2248707	A1	19-04-1973
			FR	2155673	A5	18-05-1973
			GB	1411952	A	29-10-1975
			GB	1411951	A	29-10-1975
			GB	1412008	A	29-10-1975
			JP	984831	C	29-01-1980
			JP	48073184	A	02-10-1973
			JP	54018951	B	11-07-1979