Dec. 21, 1926. 1,611,421

S. DERDERIAN

APPARATUS FOR HANDLING AND LIFTING ARTICLES IN STACK FORMATION

Filed May 25, 1926

Fig. 1.

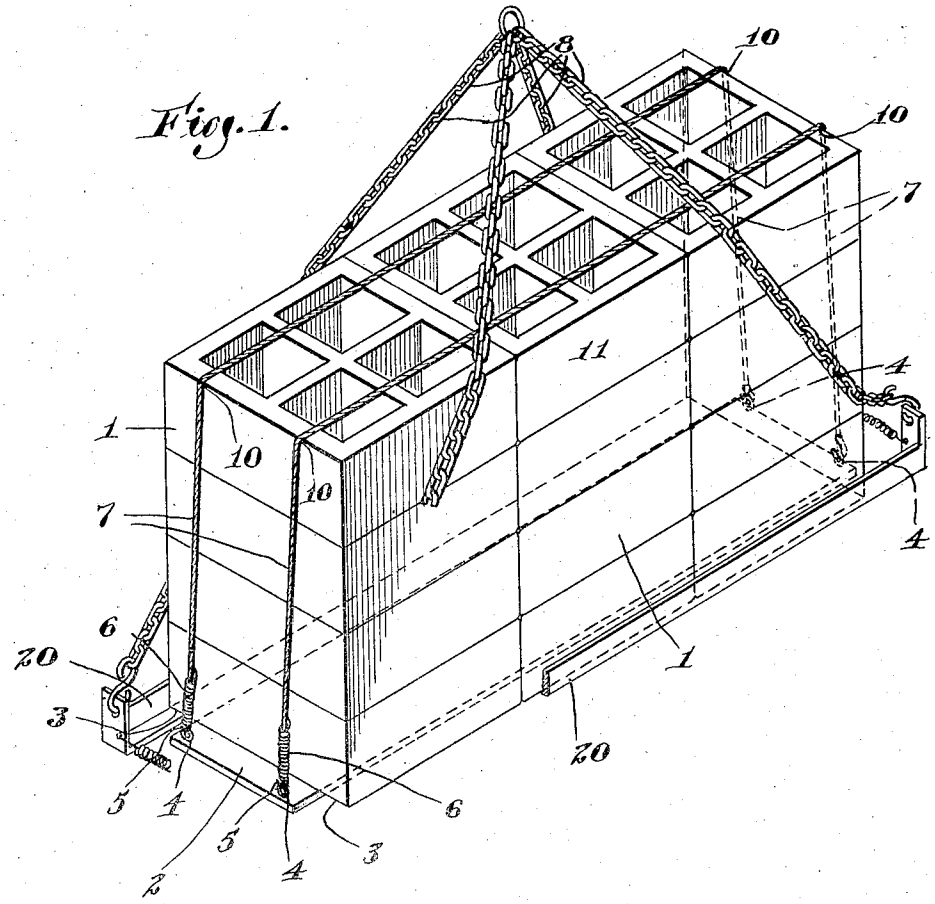

Fig. 2.

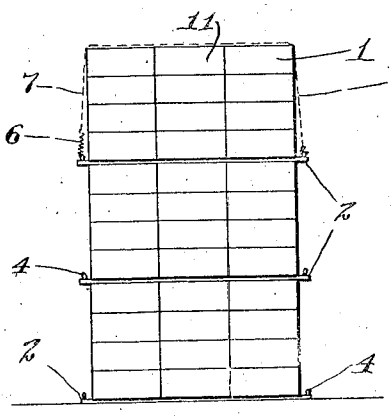

Fig. 3.

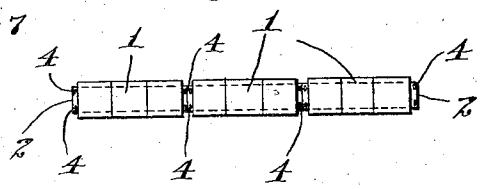

Inventor
Setrak Derderian
by James R. Hodder
Attorney

Patented Dec. 21, 1926. 1,611,421

UNITED STATES PATENT OFFICE.

SETRAK DERDERIAN, OF WATERTOWN, MASSACHUSETTS.

APPARATUS FOR HANDLING AND LIFTING ARTICLES IN STACK FORMATION.

Application filed May 25, 1926. Serial No. 111,533.

The present invention is a novel apparatus for use in handling heavy articles, such as concrete blocks or the like, while in predetermined stacks, units, or piles, and in bulk, and unloading or depositing the same in position ready for individual use.

My invention is not limited to the handling of concrete blocks, although primarily intended for this purpose, and the apparatus utilized is herein shown and described as for use in handling large, relatively heavy and bulky building blocks.

In my prior Patent No. 1,567,577, dated December 29, 1925, I have illustrated one form of apparatus for lifting and handling such articles, as well as means to hold said articles in stacked relation, and the present invention is an improvement thereon, being simpler of construction and application.

In my said prior patent I have enumerated many of the difficulties existant in the handling of such heavy blocks by hand, and the inconveniences and disadvantages thereof, and will not herein further explain same, but refer to the said prior patent for a description thereof.

I contemplate the building and handling of any desired plurality of such heavy blocks, building them into a unit of any desired or convenient size, such for example as nine blocks in the unit, twelve blocks, twenty-four, thirty-six or even a larger number, since the manual handling is eliminated and the handling by apparatus can be effected just as efficiently with large size units as with small. It will be appreciated that these blocks frequently weigh from fifty pounds upwardly, thus rendering manual manipulation of the same extremely difficult. In carrying out my invention I first provide a pallet, board or member of greater length and less width than the bottom row of the stack or unit to be built thereon. At the outer ends of this pallet are provided two or more rings, hooks or the like, as securing members, to receive hooks or members attached to holding or gripping means, preferably wire or steel cables. These securing members on the pallet are preferably so positioned that they will be inside of the outside edges of the blocks carried on the pallet. When the cables are attached to these securing members they will then pass upwardly and over the top row of blocks. By thus positioning the securing members on the pallet and having the wire cables pass upwardly and over the top row of blocks, a firm gripping action is exerted on all the blocks of the stack, preventing displacement or looseness of same.

On the cables, and preferably at one end of each cable, near the securing members on the pallet, I provide heavy coiled springs, or the like resilient means. These springs perform several important functions, viz., permitting the operator to pull the fastening hook or the like on the cable to fasten same to the securing member on the pallet, and when all four ends of the cables are thus attached, the springs will act as automatic load adjusting means.

The pallet is made of less width than the bottom row of the brick to admit the insertion of the angle irons of the apparatus illustrated in my said prior Patent No. 1,567,577, if desired, which apparatus is capable of use with the apparatus described herein.

Further features, advantages, and details will be hereinafter more fully pointed out and claimed.

Referring to the drawings illustrating a preferred embodiment of my present invention,

Fig. 1 illustrates, in perspective, a unit stack of blocks supported on the pallet;

Fig. 2 is a side elevation of a pile of stacks with one stack secured in position by my novel holding means; and

Fig. 3 is a top plan view of a series of stacks formed according to my invention.

As shown in the drawings, the concrete blocks, which may be of any size, area, dimensions and weight as desired, are designated at 1, such blocks usually weighing fifty pounds or more as above explained. The pallet employed in my novel process and apparatus is indicated at 2, and is of less width than that of the blocks 1 to be piled thereon, thus leaving an overhanging or overlapping marginal edge, as shown at 3, 3, on each side of the series of blocks to be piled or rested on the pallet 2, to receive the angle irons 20, which are attached to and raised by means of the chains 8.

The pallet 2 is also provided with a plurality of rings, hooks or holding members 4, 4. I have illustrated the stack or unit in Fig. 1 as consisting of twelve blocks, for illustrative purposes only. The ends of the pallet 2 extend beyond the bottom row of

blocks but a short distance, and the fastening or securing members 4 are positioned closely adjacent the bottom row of blocks, the better to withstand the weight and strain of lifting such a heavy load. When it is desired to raise or move the pallet and stack or unit thereon, hooks or the like 5 are attached thereto. The attachment of these hooks 5 to the members 4 is facilitated by coiled springs or other resilient and tensioning devices 6 secured at one end to the hooks 5 and at the other end to wire or steel cables 7. These coiled springs 6 permit a sufficient stretching or give to facilitate securing the hooks 5 to the members 4, and also serve the important function of acting as load adjusting and evening means when the pallet and unit is hoisted. Also, because of the positioning of these cables close to the ends of the blocks, the cables 7 press firmly and rigidly against the edges of the top layer of blocks, as illustrated at 10, 10, and over the top of the stack. This will force the outer blocks in the topmost layer against the central block 11 and will also force the topmost row of blocks downwardly against the lower rows, holding them all in place and preventing looseness or falling off of the same.

When the pallet is lowered to position, as illustrated in Fig. 2, on the ground, or on top of other stacks or units, the hooks 5 are then readily removed from the securing members 4, the springs 6 facilitating this releasing action.

With the units thus stacked, as illustrated in Figs. 2 and 3, they are in ready position for subsequent removal, either by means of the apparatus above described, or by means of the apparatus described in my said prior patent, either of which is applicable to the stacks or units as thus formed.

In utilizing the apparatus described in my said prior patent, the pallet 2 is of sufficient depth and of less width than the width of the bottom row of blocks, to permit the insertion of the angle irons of said prior apparatus, and as illustrated herein.

I believe that my novel apparatus, being simple and economical of construction, and easy of operation, and facilitating removal and handling of large quantities of bulky blocks in units, is novel, and I therefore claim the same herein.

While I have necessarily described my invention somewhat in detail, it will be appreciated that I am not limited thereto, but may vary the size, shape and arrangement of parts within reasonably wide limits without departing from the spirit of the invention.

My invention is further described and defined in the form of claim as follows:

Apparatus for handling a plurality of heavy articles in stack units, comprising a pallet adapted to support and carry a bottom row of said articles, said pallet being of less width but greater length than said bottom row, and of substantial thickness to permit the insertion under said articles of a pair of cooperating angle irons having horizontally disposed flanges of equal or less thickness than the thickness of the pallet, vertically disposed flanges to prevent sidewise slipping of said bottom row of articles, hoisting means for said angle irons, securing means on each end of said pallet, holding means for said articles, comprising cables, attached to said fastening means on the ends of said pallet, a spring fixed to one end of each cable, said cables passing upward and over the top row of articles to be held and lifted, and down to the securing means on the opposite end of said pallet, said cables acting as locking means for the articles on the pallet, and the springs acting as automatic tensioning and load equalizing devices.

In testimony whereof, I have signed my name to this specification.

SETRAK DERDERIAN.