Jan. 4, 1944. F. C. AREY ET AL 2,338,081

CLEANING APPARATUS FOR CYLINDER HEADS

Filed Jan. 29, 1941 5 Sheets-Sheet 1

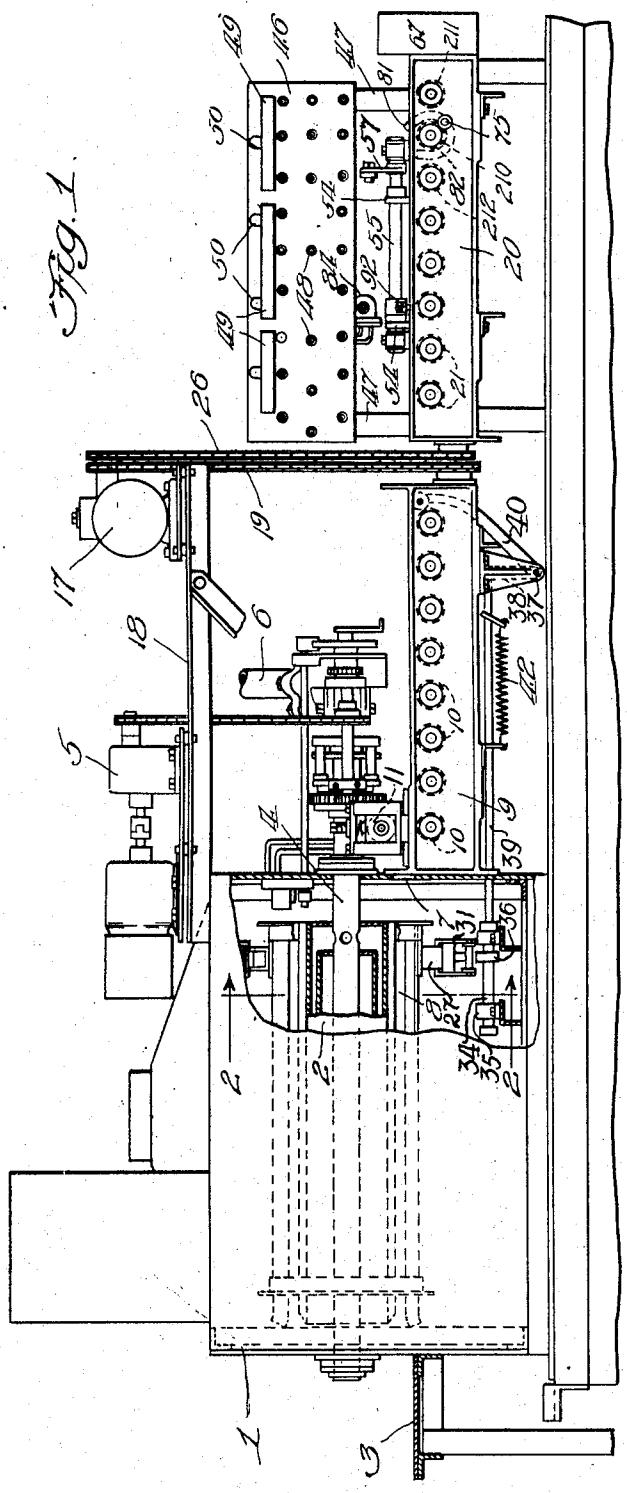

Fig. 1.

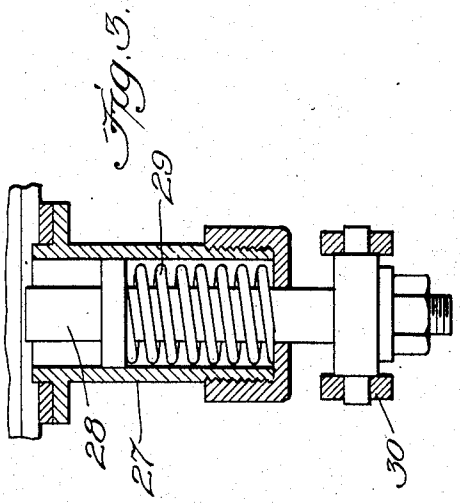

Fig. 3.

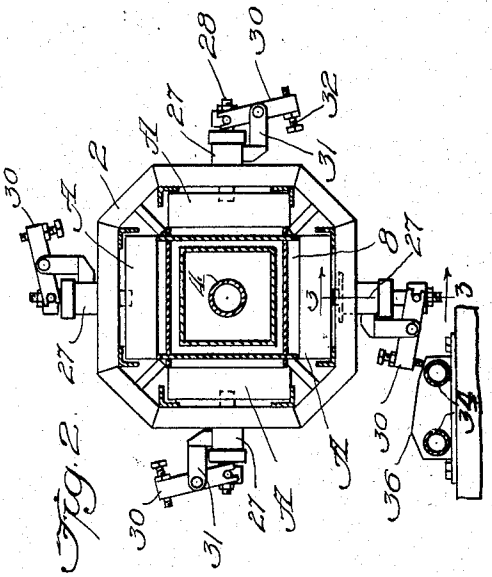

Fig. 2.

Inventors:
F. C. Arey 2nd
H. C. Hübner,
By Wm. F. Freudenreich,
Atty.

Jan. 4, 1944. F. C. AREY ET AL 2,338,081

CLEANING APPARATUS FOR CYLINDER HEADS

Filed Jan. 29, 1941 5 Sheets-Sheet 2

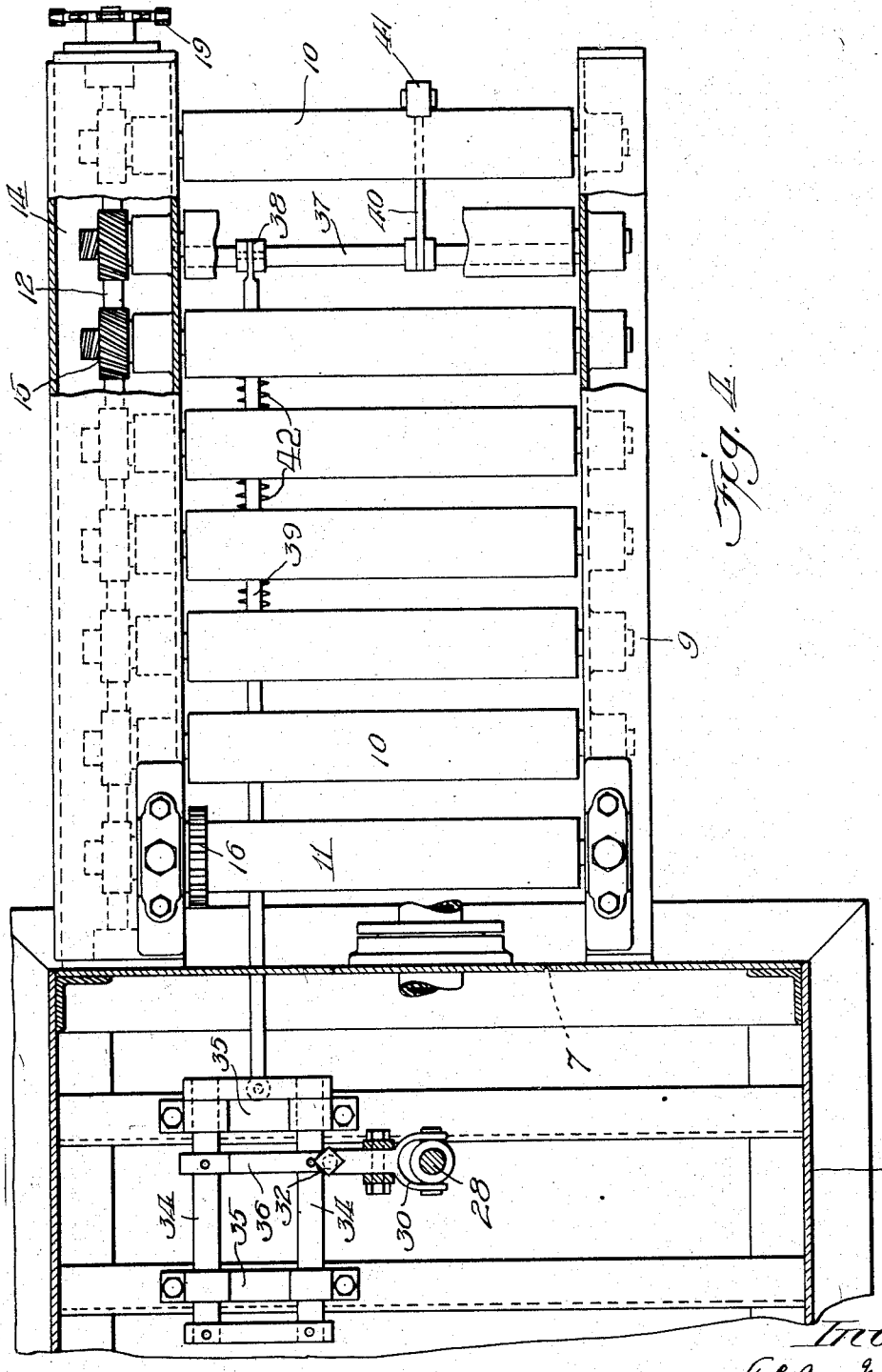

Fig. 4.

Inventors:
F. C. Arey et al
W. C. Hibner,
By Wm. F. Freudenreich, Atty.

Jan. 4, 1944. F. C. AREY ET AL 2,338,081

CLEANING APPARATUS FOR CYLINDER HEADS

Filed Jan. 29, 1941 5 Sheets-Sheet 3

Fig. 5.

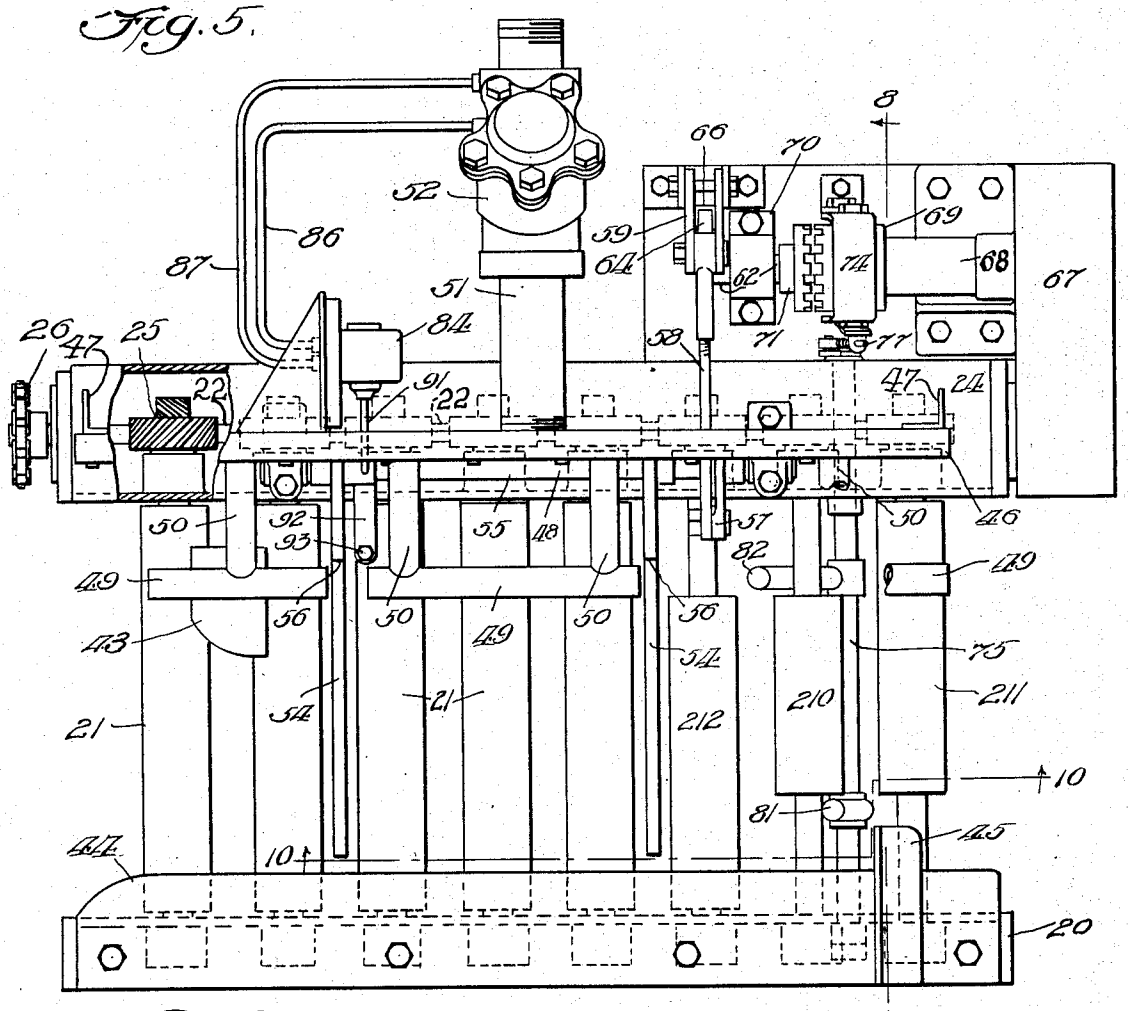

Fig. 6.

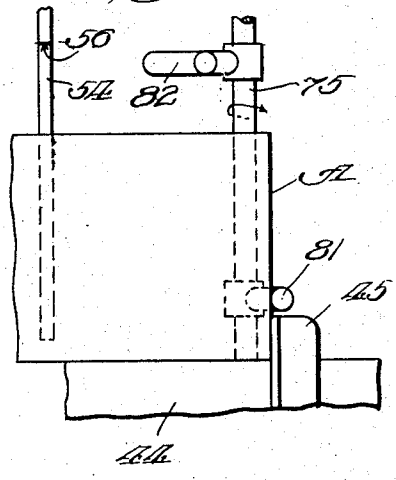

Fig. 7.

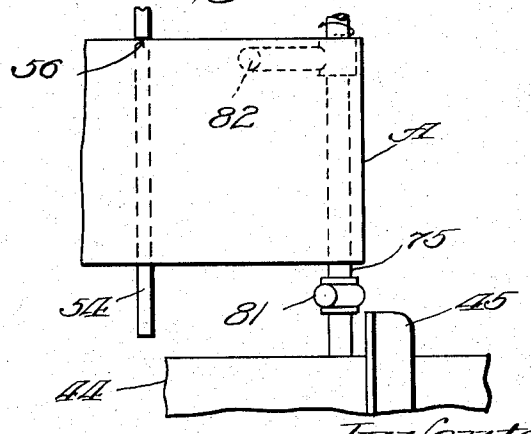

Inventors:
F. C. Arey and
W. C. Hibner,
By Wm. F. Frendenreich, Atty.

Jan. 4, 1944. F. C. AREY ET AL 2,338,081

CLEANING APPARATUS FOR CYLINDER HEADS

Filed Jan. 29, 1941 5 Sheets-Sheet 4

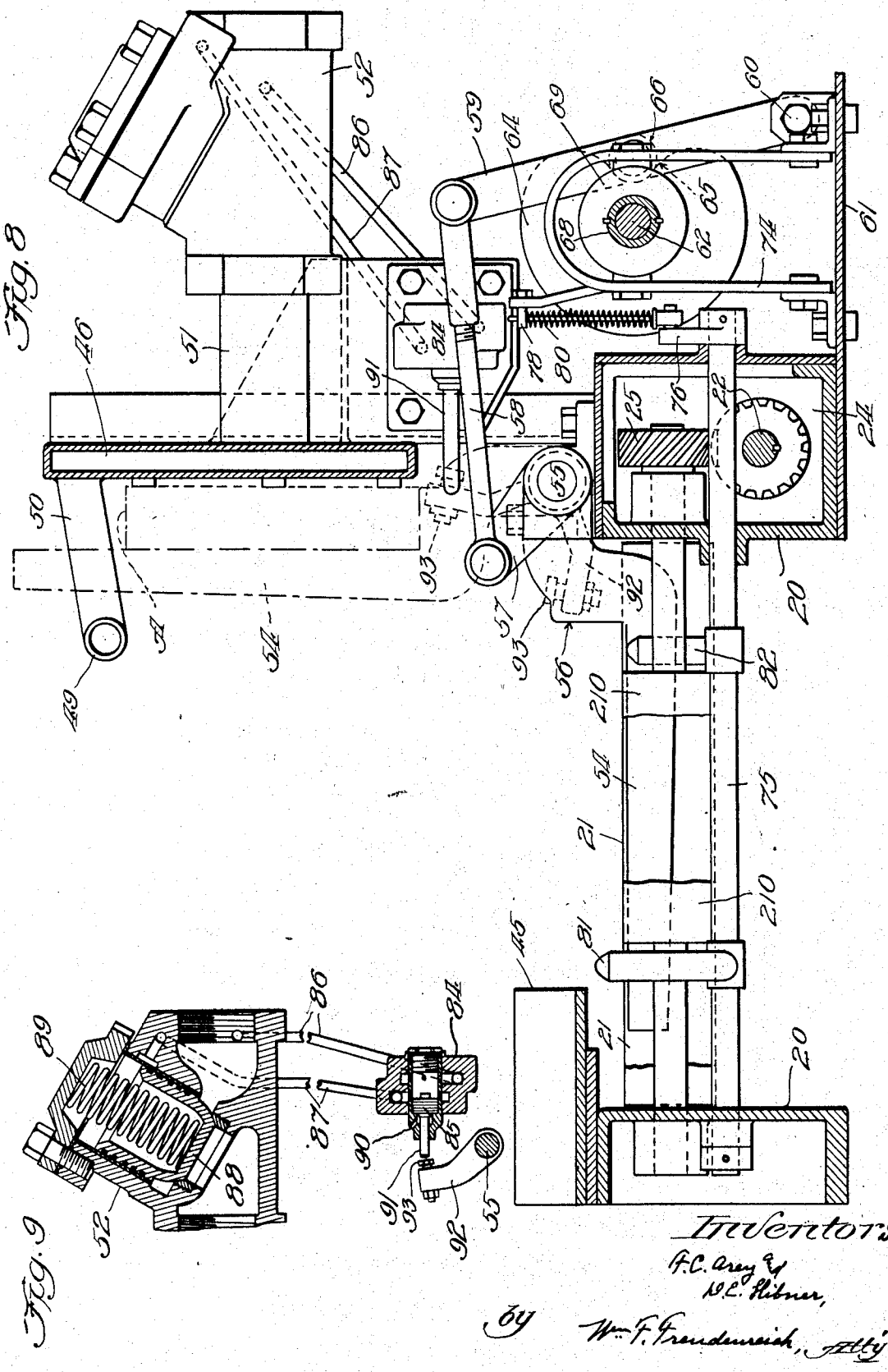

Fig. 8

Fig. 9

Inventors:
F. C. Arey et al
W. C. Hibner,
By Wm. F. Freudenreich, Atty.

Jan. 4, 1944. F. C. AREY ET AL 2,338,081

CLEANING APPARATUS FOR CYLINDER HEADS

Filed Jan. 29, 1941 5 Sheets-Sheet 5

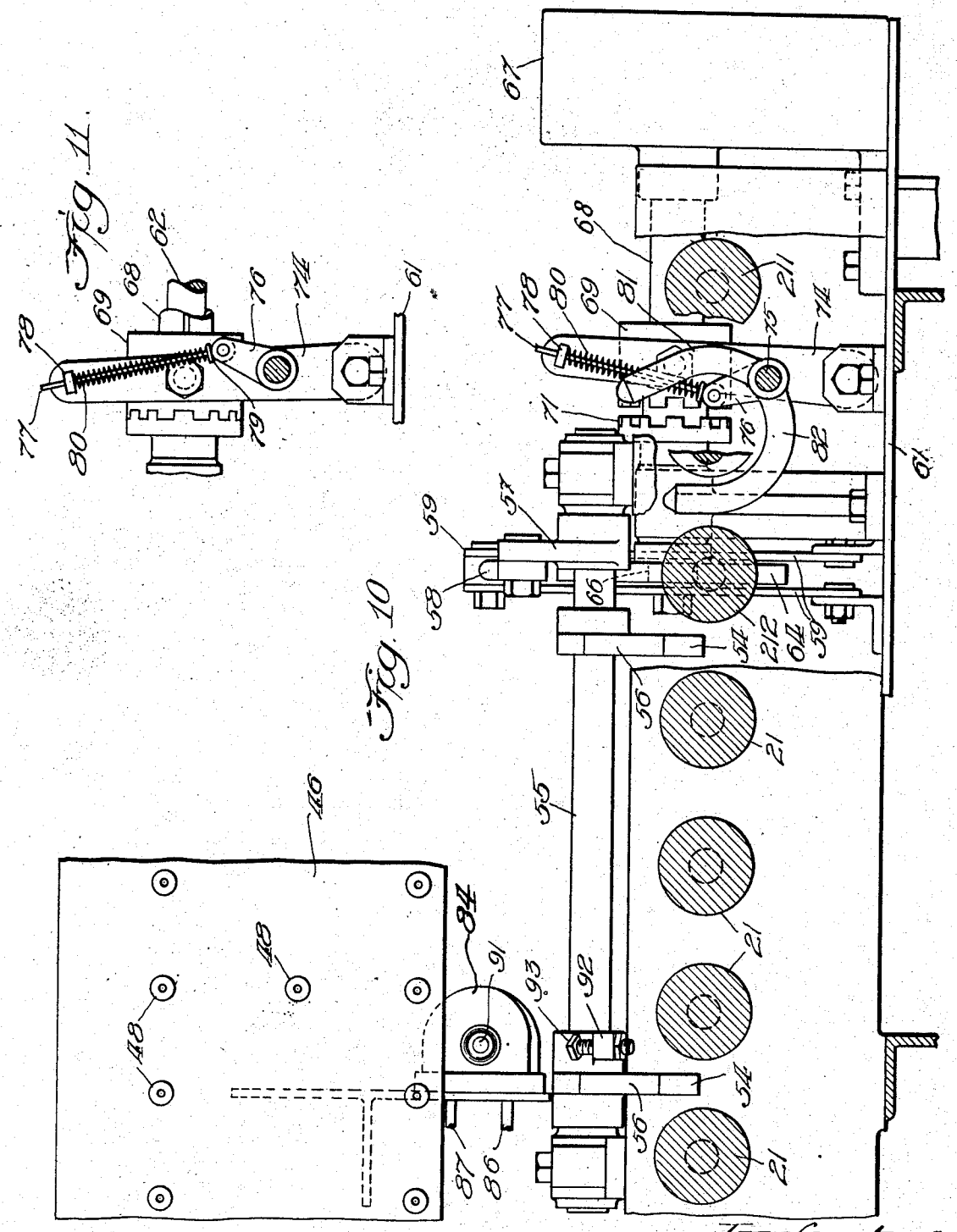

Inventors:
F. C. Arey et al
W. E. Hübner,
By Wm. F. Freudenreich, Attig.

Patented Jan. 4, 1944 2,338,081

UNITED STATES PATENT OFFICE

2,338,081

CLEANING APPARATUS FOR CYLINDER HEADS

Fred C. Arey, Freeport, and De Los E. Hibner, Du Bois, Pa., assignors to Vulcan Soot Blower Corporation, a corporation of Pennsylvania

Application January 29, 1941, Serial No. 376,454

5 Claims. (Cl. 141—1)

The present invention relates to apparatuses for cleaning the cylinder heads of internal combustion engines by removing therefrom core material, loose scale, dirt, metal chips and oil. In our prior Patent No. 2,234,909, granted on March 11, 1941, there is disclosed an apparatus for this purpose. In that apparatus there is a casing or housing containing a cage adapted to be turned step by step, the cage being adapted to contain a plurality of heads which are inserted and removed, one at a time, through the front end of the casing whenever a head-receiving compartment of the cage lies in the plane of the table from which the heads are fed into the casing. In this prior apparatus each head must be withdrawn through the front end of the casing before another head can be inserted, thereby requiring the operator to spend about twice as much time for inserting and again removing a head from the casing as is needed to place the head in the casing.

The object of the present invention is to provide means for handling each head, after it has been washed in the casing, in such a manner that the removal of the head does not require a separate operation on the part of the workman, but is effected automatically through the insertion of another head in the casing, thereby reducing by approximately one-half the time which the workman must spend in inserting and removing the heads.

A further object of the present invention is to insure that the heads shall be quite dry after being washed, without increasing the length of time during which they must remain in the casing in which the washing takes place.

In carrying out our invention, the casing of the washing apparatus may have a rear discharge opening as well as the inlet at the front so that, whenever a cylinder head is pushed into the casing from the front, it pushes out through the back of the casing the head which is ready to be discharged. In order to reduce to a minimum the amount of energy that the workman has to expend, provision is made for automatically withdrawing each head from the casing after it has been pushed out a little way. Since any work done upon a head after it leaves the casing does not interfere with the washing operations that are being carried out in the casing, means are also provided whereby, after being withdrawn from the casing, each head is manipulated so as to empty it of any water or other washing liquid that may have been pocketed therein and thoroughly to dry the head by blowing hot air or other gaseous material over the exterior and interior surfaces; all of the mechanisms being so coordinated that this subsequent drying operation takes place during the time the cage is travelling through any one of its steps, so that the drying station will always be found empty whenever a head to be dried reaches it.

The various features of novelty whereby our invention is characterized will hereinafter be pointed out with particularity in the claims; but, for a full understanding of our invention and of its objects and advantages, reference may be had to the following detailed description taken in connection with the accompanying drawings, wherein:

Figure 1 is a view illustrating in side elevation a machine or apparatus embodying the present invention, a portion of the initial washing apparatus being shown in section; Fig. 2 is a section on a somewhat larger scale than Fig. 1, on line 2—2 of Fig. 1, showing only the rotatable cage and the tripping device mounted in the casing below the same; Fig. 3 is a section on an enlarged scale, taken on line 3—3 of Fig. 2; Fig. 4 is a horizontal section through the rear end of the casing in which the work is washed and a top plan view of the work-receiving apparatus, immediately in rear of the casing; Fig. 5 is a top plan view of the apparatus that lies just to the right of that shown in Fig. 4 and which receives the work from the latter and dries it; Fig. 6 is a more or less diagrammatic view illustrating fragments of the apparatus appearing in Fig. 5, and showing a cylinder head at the limit of its rearward movement before it is shifted into position for being dried; Fig. 7 is a view similar to Fig. 6, showing the cylinder head in the position which it occupies at the end of the drying operation and again begins its travels toward the rear, namely, toward the right, as viewed in Figs. 5 and 7; Fig. 8 is a section taken on lines 8—8 of Fig. 5; Fig. 9 is a section through the main and pilot valves shown in Fig. 8, and there being also illustrated the tripping means for the pilot valve; Fig. 10 is a section on line 10—10 of Fig. 5, the greater portion of the hollow drying plate being omitted; and Fig. 11 is a side elevation of the clutch actuating mechanism appearing in Fig. 10, the clutch being shown closed in Fig. 11 and open in Fig. 10.

Referring to Figs. 1 and 2 of the drawings, 1 represents a large housing or casing within which is a long cage 2 rotatable about a horizontal axis extending from front to rear of the casing; the cage containing open-ended compartments for

receiving four cylinder heads A distributed to form a hollow square. This cage is adapted to be turned step by step, through angles of ninety degrees and to come to rest at the end of each step with one of the compartments at the bottom and in about the same plane as a feeding table 3 at the front end of the casing. While the apparatus is in operation, cleaning fluids are discharged upon the heads carried around by the cage. Each head is turned upside down and then right-side up again during the time it remains in the cage, thereby permitting the washing water or other liquids to drain from the same and carry away such loose foreign matter as is not driven off directly by the cleaning jets. This apparatus may take any usual or preferred form, that illustrated being the same as the apparatus forming the subject matter of our aforesaid patent. No further description of this portion of the apparatus is needed here except that it should be noted that the cage is supported by a horizontal shaft 4 which serves also as a conduit for supplying the washing water or other liquid; this shaft being driven by means of an electric motor 5 through suitably controlled transmission means; and cleaning fluid being supplied through a large main 6, all as explained in the aforesaid application.

The present improvements have to do with the handling of the cylinder heads or other pieces of work that may be cleaned in the same way as such heads, after the heads have received the desired treatment within the casing and must be removed therefrom.

As shown in Fig. 1, there is an opening 7 in the rear wall of the casing 1 just behind the rear end of the lowermost compartment 8 in the cage 2. In accordance with our present invention, instead of withdrawing a head that has been washed through the front end of the casing, it is simply pushed back by another that is being inserted at the front, and passes through the opening 7 in the rear wall. Behind the casing, below the discharge opening 7, is a long stationary bed or table 9 having thereon a series of parallel rollers 10 whose axes are at right angles to the axis of rotation of the cage, namely at right angles to the direction in which a cylinder head is moving when it is pushed out through the casing upon these rollers. Above the roller nearest the casing is a cooperating roller 11, whereby the rearwardly-moving head is gripped and positively moved along until it has been brought clear of the casing and is delivered to another set of rollers to be hereafter described. The rollers 10, as best shown in Fig. 4, are driven from a suitable shaft 12 mounted in a gear housing 14 extending along corresponding ends of the rollers and having bearings for those ends; there being suitable driving gears 15 between the shaft 12 and each of the rollers 10. The roller 11 is geared to its cooperating roller 10 by suitable gear wheels 16, as is common in the case of pairs of feed rollers. The shaft 12 is continuously driven, while the machine is in operation, from a motor 17 mounted on the same elevated support 18 that carries the motor 5, through a sprocket chain 19 or other suitable means.

Behind and aligned with the bed or table 9 is another bed or table 20 provided with a series of feed rollers 21 similar to and parallel with the rollers 10. The feed rollers 21, as shown in Figs. 5 and 8, are driven from a shaft 22 similar to the shaft 12, arranged in a housing 24 at the side of the bed or table 20 through suitable gear drives 25 similar to the gears 15. The shaft 22 is driven from the motor 17 through a second sprocket chain 26.

In view of the fact that each cylinder head must be pushed out through the rear of the casing in which it is washed, a movable stop must be provided to insure that each head will stop at exactly the right point when it is pushed into the casing, and will not become accidentally displaced until it is ready to be discharged from the casing. We have therefore provided each compartment of the cage with a retractile stop located at the rear end thereof; these stops projecting into the compartments for engagement with the rear edges of the cylinder heads at all times except during those periods where they must be withdrawn into idle positions to permit the discharge of the heads. As appears in Figs. 1, 2 and 3, four little housings 27 are arranged radially on the exterior of the cage 2 at the longitudinal center and near the rear end of each of the four work-receiving compartments. In each housing is a plunger 28 acted upon by a compression spring 29 that tends constantly to force the inner end of the plunger into the interior of the cage, namely into the interior of the corresponding work-receiving compartment. The outer end of each plunger extends through the outer end of its housing and is there interlocked with a rocker arm 30 pivotally mounted on a suitable bracket 31 projecting from the little housing for oscillation about an axis parallel with the axis of rotation of the cage. On the free end of the rocker arm is an adjustable pin 32 extending through the arm in a plane at right angles to the axis of rotation of the cage.

In the bottom of the main casing 1, in about the plane of the four stop devices, is a little frame 34 held in place by spaced brackets 35 so as to be slidable in the direction of the length of the cage. On this frame is a cam-shaped cross bar 36 which, when the frame is in its forward position, as shown in Fig. 4, lies in the plane of the four pins or screws 32 on the stop devices. The parts are so proportioned that when the cam is in the position shown in Fig. 4, each screw 32 engages with the upper edge thereof, as indicated in Fig. 2, as the corresponding work-receiving compartment is very nearly in its work-receiving and work-discharging position, and causes the corresponding rocker arm to be rocked in the direction to withdraw the plunger with which it is connected from the work-receiving compartment. Then, while the cage remains stationary, the path behind the lowermost cylinder head is clear and this head may be pushed out through the rear of the casing, as heretofore explained, by the pressure of another cylinder head which is being moved into the same compartment from the front end of the casing.

It will be seen that the little frame 34 has a limited lengthwise movement, being shown at one end of such movement in Fig. 4 and being adapted to be shifted toward the right a distance somewhat greater than the thickness of the cam bar or shoe 36. When so shifted toward the right to the other limit of its movement, it no longer has any influence on the stop device, the retraction of which it had previously brought about, and the spring associated with that device immediately carries the plunger into its working position unless there be a cylinder head resting on top of the plunger. In other words, after the plunger has been retracted and the cyl-

inder head starts to move out through the rear of the casing, the cylinder head must pass over the plunger and its trailing end must be clear of the plunger before the latter can snap up into working position again. In order to avoid having the plunger released while a cylinder head is moving across the same, which would result in the plunger pressing up against the under side of the cylinder head and scraping along the same, means are provided to leave the cam in its working position until the cylinder head that is being removed has passed beyond the plunger. To this end there is provided near the rear end of the first conveyor device, comprising the feed rollers 10 and 11, a transverse rock shaft 37 having an upwardly projecting radial arm 38 which is connected to the rear end of the little frame 34 by a rod 39. Another arm 40 extends upwardly and rearwardly from the rock shaft to a point behind and above the rearmost roller 10, the upper end of this arm being provided with an anti-friction device 41. When the leading end of a cylinder head contacts the anti-friction device on the upper end of the arm 40, it causes the rock shaft 37 to turn in the direction to draw the frame 34 toward the right, as viewed in Fig. 4. Consequently, by carrying each cylinder head away quickly, after it once becomes engaged with the first conveyor device, the stop device remains locked in its idle position until after the retracting cylinder head is beyond the same and then the cam-carrying frame is quickly shifted so as to cause the stop to be in its working position before the incoming head reaches it. Then, after the discharged head leaves the first set of feed rollers, a spring 42, acting on the connecting rod 39, causes the frame 34 to be returned to its working position. In the meantime, the cage has again started a turning movement, carrying the stop device behind the newly inserted cylinder head away from the cam; so that all of the stops remain in their working positions until the cage again completes a quarter turn and brings another head into discharge position.

As a cylinder head moves beyond the first group of feed rollers, it enters upon the second group 21 between a guide 44 extending throughout the length of the group of rollers at one side of the apparatus and a short guide block 43 at the forward end of the group of rollers; the head travelling along until it strikes a fixed stop 45, which is best shown in Fig. 5. When the head reaches this stop, it is picked up and placed on edge to drain any remaining water therefrom and to subject it to strong jets or blasts of air for completely drying the same.

The drying apparatus comprises a thick rectangular plate 46 extending throughout the entire length of the second feeding unit and supported on edge at a considerable distance above the rollers 21 by suitable uprights 47 rising from the bed or table 20 on the side opposite that at which the long guide bar 44 is located. This plate is provided with numerous little nozzles or jetting devices 48 on the inner side; these being so disposed as to register with various holes that have been drilled into the head, and other openings in what is the under side of the head as positioned on the engine cylinder. There is also a series of aligned tubes 49, closed at the ends, arranged on the inner side of the plate along the upper edge; these elements being connected to the upper part of the hollow plate by means of tubular stems 50 through which air may be delivered from the interior of the hollow plate into the tubular members. Drying air is delivered into the outer or rear side of the hollow plate through a large pipe 51 containing a main valve 52.

The cylinder head is lifted from the feed rollers 21 and swung up against the member 46 by means of a pair of arms 54 fixed in spaced relation to each other to a shaft 55 mounted on top of the gear housing 24. In Fig. 8 this shaft is shown in such angular position that the arms 54 lie just below the plane of the tops of the rollers 21. The base ends of the arms 54 are L-shaped, so that one leg of each extends upwardly when the arms are horizontal, while the other legs extend horizontally to meet and embrace the supporting shaft 55. Thus, the long straight portion of each of the arms 54 has near the inner or base end a shoulder 56 that is vertical at the time the arm lies horizontal. For this reason, after a cylinder head has come to rest against the stop 45, the turning of the shaft 55 in the clockwise direction, as viewed in Fig. 8, will cause the cylinder head to be lifted and swung up. The distance between each of the shoulders 56 and the guiding face of the guide member 44, at the time the arms 54 stand in their horizontal, lowered positions, is considerably greater than the width of one of the cylinder heads. For this reason, the cylinder head being in contact with the guide 44 at the time it is lifted up by the arms, the head will slide downwardly along the arms until it strikes the shoulders 56. Then, when the arms are again swung down, the cylinder head will remain in engagement with these shoulders and thus be spaced a substantial distance away from the guide 44. These two conditions are illustrated in Figs. 6 and 7, Fig. 6 showing a cylinder head engaged with the stop 45 while still in contact with the guide along which it travelled to reach the stop, whereas in Fig. 7 the cylinder head is shown spaced apart from the guide 44 after having been lowered from an upright position. This lateral shifting of the cylinder head is utilized to control the operation of the swinging support, the discharge of the drying air, and the final removal of the cylinder head from the second group or battery of feed rollers 21 without being interfered with by the stop 45.

The shaft 55 has a radial arm 57 fixed thereto. A connecting rod 58 extends from the free end of this arm to the upper end of a comparatively long lever 59 which stands almost vertical outwardly beyond the gear box 24 and is pivoted at its lower end, as indicated at 60, to a stationary part 61 of the bed or table 20. Between the lever 59 and the gear box 24 is a shaft 62 that is parallel with the shaft 55. Fixed to the shaft 62 is a cam 64 in the form of a disk having in the edge thereof a valley 65 which constitutes the low point on the cam. The lever 59 is provided about midway between its ends with a cam roller 66 that is adapted to ride on the periphery of the cam disk; the parts being so proportioned that when the cam roller is at the bottom of the valley, the lifting arms 54 are down, as shown in full lines in Fig. 8, whereas, as soon as the cam roller begins to turn and thereby cause the roller to ride up out of the valley, the arms 54 begin to swing up. Finally, when the cam roller reaches the unmutilated portion of the edge of the disk, the arms 54 stand upright, as shown in dotted lines in Fig. 8, and the cylinder head is held thereby in proper registration with the jetting devices on the hollow plate 46. After the

cam has completed the greater part of a revolution, the cam roller again runs downhill and into the valley so as to restore the parts to the positions illustrated in full lines in Fig. 8. Thus, a single revolution of the shaft 62 causes a cycle of operation of the head-lifting arms to be completed. Since the unmutilated portion of the cam edge is of much greater angular length than is the valley portion, each cylinder head is held in the upright position during a substantial interval of time and, by admitting heated air into the hollow member 46 during that period, the head is effectively dried.

The shaft 62 operates only intermittently under the control of the cylinder heads themselves. In the arrangement shown, the shaft 22 that drives the feed rollers 21 extends beyond the end of the gear housing 24 and into a smaller transverse gear housing 67 from which protrudes a tubular shaft 68 (best shown in Fig. 8). The tubular shaft 68 surrounds the shaft 62 and is constantly driven; whereas the shaft 62 turns only when it is clutched to the shaft 68. The shaft 68 is much shorter than is the shaft 62 so as to provide room for the clutch member 71 fixed to the shaft 62 between the movable clutch member 69, mounted on the free end of the shaft 68, and the stationary bearing 70 for the projecting end of the shaft 62. Whenever the clutch is thrown in, the shaft 62 is caused to rotate.

The immediate actuator for the movable clutch member 69 is a lever 74 in the form of an inverted U embracing the member 69 and pivotally connected at its lower end to the stationary support or platform 61 for oscillation about an axis at right angles to the shaft 62. This lever is in turn operated by a transverse shaft 75 extending underneath the battery of rollers 21 close to the discharge end of the latter, namely close to the fixed stop 45. This shaft has on the end thereof adjacent to the clutch actuator 74 a rigid radial arm 76 extending in the upward direction. A rod 77 is hinged at its lower end to the upper end of the arm 76 and extends slidably through an ear 78 fixed to the upper end of the lever 74. Surrounding the rod 77, between the ear 78 and a shoulder 79 on the lower end of the rod, is a coiled compression spring 80. The parts are so proportioned that the arm 76 and the rod 77 act as a toggle that may break in either direction and one member of which is resilient in the lengthwise direction. In other words, when the rod and the center line of the arm 76 make an obtuse angle while lying on one side of a straight line passing through the middle of the ear 78 and the axis of the shaft 75, as shown in Fig. 10, the clutch is held open. Then, if the shaft is turned in the clockwise direction, as viewed in Fig. 10, until the hinge axis between the rod and the arm 76 pass to the other side of the aforesaid line or center, the spring 80 is first placed under greater compression, and is then permitted to expand by forcing the clutch actuator 74 into the clutch closing position illustrated in Fig. 11. The opening and the closing of the clutch may therefore be brought about by simply oscillating the shaft 75 through a small angle, first in one direction and then in the other.

In order to provide means for oscillating the shaft 75, it has thereon two curved fingers 81 and 82, spaced apart from each other lengthwise of the shaft and so shaped that upon being viewed from one end of the shaft, they present somewhat the appearance of a horseshoe. These fingers are so shaped and so disposed that the finger 81 projects above the top of the rollers 21 in the path of an oncoming cylinder head to be dried, when the clutch is open, whereas the finger 82 projects above the tops of these rollers when the clutch is closed. In order to provide room for the swinging movements of these fingers, the body portions of the two endmost feed rollers 210, 211 are cut away, as best shown in Fig. 5. The end of the body portion of the third feed roller from the end, namely the roller 212, is also cut away at that end of the roller farthest from the guide 44. The finger 82 is spaced far enough away from the guide 44 so as to lie outside of the path of the cylinder head moving along the guide 44 into position to be picked up by the arms 54, whereas the finger 81 is spaced apart from the vertical plane of the two shoulders 56 on the arms 54, when these arms are down, more than the width of a cylinder head.

The result of the construction just described is that when a cylinder head is fed along toward the stop 45, in contact with the guide 44, it strikes the finger 81 which, because the clutch is open, as shown in Fig. 5, now projects up into the path of the head and, before being brought to rest through engagement with the stop 45, as shown in Fig. 6, turns the clutch-operating shaft 75 sufficiently to cause the clutch to be closed. As soon as this happens, the lifter begins to swing up and places the head in position for its hot air treatment. After the shaft 62 has completed a revolution, the cam roller drops into the valley on the cam and, the weight of the arms 54 and the cylinder head being off center, the arms with the cylinder head thereon swing down from the dotted line position of Fig. 8 to the full line position. This condition is illustrated in Fig. 7 from which it will be seen that the cylinder head lies inwardly from and clear of the finger 81, but overlies the finger 82; the result being that through pressing down the finger 82 on the shaft 75 has been brought to the starting position illustrated in Fig. 5 and the clutch has been caused to open. In other words, the cylinder head can now move onward beyond the discharge end of the battery of rollers 21 to another conveyor, not shown, adapted to carry the heads away for storage or assembly purposes. This final discharging movement of a cylinder head is accomplished without interference on the part of the finger 81 which, at this time, lies at one side of the path of travel of the head. However, as soon as the cylinder head reaches the position shown in Fig. 7, the apparatus is ready to receive the next head which may then engage the finger 81 and cause the shaft 75 to turn in the direction of the arrow in Fig. 6 before the head comes to rest against the stop 45.

The main valve 52 for the delivery of air for drying the heads is controlled by a pilot valve 84 in the same way that the delivery of washing liquids to the washing station is controlled. This feature is shown in detail in Fig. 9. In Fig. 9 the hot air enters the righthand end of the casing of the main valve and, when the movable member 85 of the pilot valve is in the position illustrated, air may flow from the interior of the righthand side of the main valve casing through pipe 86, through the casing of the pilot valve, and back through pipe 87 to a point above the piston valve 88 in the main valve device; whereby the pressure of the air assists a compression spring 89 behind the piston valve in holding the latter closed. When the movable pilot valve member 85 is

pushed inwardly, namely, toward the right in Fig. 9, communication between the pipes 86 and 87 is interrupted and the pipe 87 is placed in communication with a small port 90 leading to atmosphere. Therefore, in the latter position of the movable member of the pilot valve device, the air pressure behind the main piston valve is vented to atmosphere, so that only the spring is left to hold this valve closed. However, the hot air in the inlet side of the casing of the main valve is constantly acting on a portion of the periphery of the piston valve in a direction to open the valve so that, when the hot air is at a sufficiently high pressure to perform a drying operation successfully, it applies a sufficient pressure to the piston valve to overcome the resistance of the spring and thereby force the valve open. Even when the movable member of the pilot valve has been pressed inwardly to bring about the opening of the main valve, there is pressure behind the movable pilot valve member so that the parts of the pilot valve constantly tend to maintain the relative positions which they occupy in Fig. 9.

As is customary, the movable member 85 of the pilot valve is provided with a stem 91 which projects outwardly a short distance beyond the valve casing. What may be termed the opening of the pilot valve may be effected by pushing this stem back into the valve casing. This is accomplished by means of a radial arm 92 fixed to the hinge shaft 55 and having in the outer end an adjustable pin or plug 93. The parts are so proportioned that when the swinging device for raising and lowering a cylinder head is down, as shown in full lines in Fig. 8, the pin or plug 93 is remote from the end of the valve stem 91, so that the main valve remains closed. When the head-lifting member is swung up into the dotted line position of Fig. 8, the part 93 strikes against the end of the stem of the pilot valve and presses the latter back into the position that causes the main valve to open. By this means, as the cylinder approaches its upright, on-edge position, it is subjected to numerous blasts or jets of air from the jetting devices in the adjacent face of the hollow plate 46, and to further blasts or jets directed downwardly and toward the exposed face or side of the head, from the sleeve-like or tubular jetting devices 49. This continues during the larger part of a revolution of the cam 64 and, when the cylinder head drops back toward the horizontal position, the external pressure on the stem of the pilot valve ceases and the supply of air is immediately shut off and will not start again until the next head is brought into position for drying.

It will thus be seen that cylinder heads may be washed, one at a time; then be carried away, drained and dried; and then be finally discharged: without requiring the workman or operator to do more than has heretofore been necessary to introduce the heads into a washing apparatus. Not only is there a great saving of labor but, by providing separate washing and drying stations, twice as many heads can be washed and dried in a given time as would be the case if both operations took place successively in the same station. Furthermore, this arrangement permits complete drying of heads which could not otherwise be properly dried in the apparatus that washes them, without reducing the number of heads that can be passed through the apparatus in a given time. It will also be seen that the mechanisms at the drying station, including the devices for causing drying air to be discharged, operate only when there is a cylinder head adjacent to the drying station, so that there is no waste of power or drying air.

We have referred to the work to be treated as consisting of cylinder heads and have illustrated an apparatus and mechanism especially adapted for the washing and drying of such heads. Other things, however, adapted to be treated in accordance with the principles on which the aforesaid apparatus and mechanisms are based, may be handled in the same way. Therefore, when we refer to cylinder heads, we mean any objects susceptible of a corresponding treatment.

While we have illustrated and described with particularity only a single preferred form of our invention, we do not desire to be limited to the exact structural details thus illustrated and described; but intend to cover all forms and arrangements which come within the definitions of our invention constituting the appended claims.

We claim:

1. The combination with a washing apparatus for cylinder heads into which heads may be inserted one at a time from the front and be discharged, after being washed, at the rear end, of a stop for engagement with a head entering the apparatus and arresting its rearward movement upon reaching the washing position, said stop being movable between a working position and an idle position, a conveyor in rear of the said apparatus to receive each head when it is pushed rearwardly out of the apparatus, and means controlled by a head on the conveyor to shift the stop to arrest the rearward motion of the next head which is inserted in the apparatus and pushed back into the washing position.

2. The combination with an apparatus for washing cylinder heads, including a rotatable holder into which a head may be inserted from the front end to bring it into washing position, of a stop at the rear end of the holder for engagement with the head when the latter reaches the washing position, a conveyor beyond the latter end of the holder to receive a washed head and automatically carry it away upon the withdrawal of the stop and moving the head a short distance beyond the rear end of the holder, and means controlled by the angular position of the holder to cause said stop to shift from a working position to an idle position so that a washed head may be pushed out of the washing position and upon the conveyor by a head moving rearwardly into washing position.

3. The combination with an apparatus for washing cylinder heads, including a rotatable holder into which a head may be inserted from the front end to bring it into washing position, of a stop at the rear end of the holder for engagement with the head when the latter reaches the washing position, a conveyor beyond the latter end of the holder to receive a washed head and automatically carry it away upon the withdrawal of the stop and moving the head a short distance beyond the rear end of the holder, and means controlled by the angular position of the holder to cause said stop to shift from a working position to an idle position so that a washed head may be pushed rearwardly out of the washing position and by a head moving rearwardly on the conveyor to cause the stop to assume its working position again.

4. The combination with an apparatus for washing cylinder heads, including a rotatable holder into which a head may be inserted from the front end to bring it into washing position,

of a spring-held stop at the rear end of the holder for engagement with the head when the latter reaches the washing position, a conveyor beyond the latter end of the holder to receive a washed head and automatically carry it away upon the withdrawal of the stop and moving the head a short distance beyond the rear end of the holder, a cam element located so as to be engaged by the stop when the holder is in the proper angular position to permit a head to be moved therefrom to the conveyor and cause the stop to shift from the working position to the idle position, and means controlled by a head on the conveyor to shift the cam into an idle position clear of the stop.

5. The combination with an apparatus for washing cylinder heads, including a rotatable holder into which a head may be inserted from the front end to bring it into washing position, of a spring-held stop at the rear end of the holder for engagement with the head when the latter reaches the washing position, a conveyor beyond the latter end of the holder to receive a washed head and automatically carry it away upon the withdrawal of the stop and moving the head a short distance beyond the rear end of the holder, a cam spring held in a working position for engagement with said stop and for shifting the latter into an idle position when the holder occupies the proper angular position to permit a head to pass therefrom to the conveyor, and means controlled by a cylinder head on said conveyor to cause said cam to shift into an idle position clear of the stop.

FRED C. AREY.
DE LOS E. HIBNER