US006997626B2

(12) **United States Patent**
Silverbrook

(10) **Patent No.: US 6,997,626 B2**
(45) **Date of Patent: Feb. 14, 2006**

(54) **INK AND AIR DISTRIBUTION WITHIN A PRINTER ASSEMBLY**

(75) Inventor: **Kia Silverbrook**, Balmain (AU)

(73) Assignee: **Silverbrook Research Pty Ltd**, Balmain (AU)

(*) Notice: Subject to any disclaimer, the term of this patent is extended or adjusted under 35 U.S.C. 154(b) by 0 days.

(21) Appl. No.: **10/913,341**

(22) Filed: **Aug. 9, 2004**

(65) **Prior Publication Data**

US 2005/0007421 A1 Jan. 13, 2005

Related U.S. Application Data

(63) Continuation of application No. 10/172,024, filed on Jun. 17, 2002, now Pat. No. 6,796,731, which is a continuation of application No. 09/575,111, filed on May 23, 2000, now Pat. No. 6,488,422.

(51) **Int. Cl.**
B41J 2/155 (2006.01)

(52) **U.S. Cl.** **400/77**; 347/42; 347/85; 347/86

(58) **Field of Classification Search** 347/42, 347/43, 65, 85, 86; 400/77
See application file for complete search history.

(56) **References Cited**

U.S. PATENT DOCUMENTS

4,417,259	A	11/1983	Maeda
4,555,717	A	11/1985	Miura et al.
4,883,219	A	11/1989	Anderson et al.
4,959,662	A	9/1990	Kobayashi
5,017,947	A	5/1991	Masuda
5,040,908	A	8/1991	Matsuya et al.
5,051,761	A	9/1991	Fisher et al.
5,065,169	A	11/1991	Vincent et al.
5,081,472	A	1/1992	Fisher
5,108,205	A	4/1992	Stone
5,172,987	A	12/1992	Stellmach et al.
5,276,468	A	1/1994	Deur et al.
5,309,176	A	5/1994	Faes et al.
5,366,301	A	11/1994	Martin et al.
5,381,162	A	1/1995	Roy et al.
5,412,411	A	5/1995	Anderson
5,502,471	A	3/1996	Obermeier et al.
5,570,959	A	11/1996	Moriwaki et al.
5,594,481	A	1/1997	Keefe et al.
5,610,636	A	3/1997	Hanabusa et al.
5,753,959	A	5/1998	Quinn et al.

(Continued)

FOREIGN PATENT DOCUMENTS

EP	313204	A	4/1989

(Continued)

OTHER PUBLICATIONS

Derwent Abstract Accession No 99-089545/08, Class P75, JP 10-324003 A (Tokyo Electric Co Ltd) Dec. 8, 1998 Abstract.

(Continued)

Primary Examiner—Andrew H. Hirshfeld
Assistant Examiner—Kevin D. Williams

(57) **ABSTRACT**

A method of distributing ink and air to an array of print chips in a printhead assembly. The method includes supplying different inks from respective sources to a longitudinal distribution housing. The housing has a respective duct for each ink that extends longitudinally along the housing. The ink is then transferred from each duct to a laminated ink distribution structure fixed to the distribution housing, so such inks are supplied to the print chips as required. The method also includes supplying air from an air source to an air duct extending longitudinally along the distribution housing. Air is then transferred along the air duct to a space between the print chips and a nozzle guard.

15 Claims, 22 Drawing Sheets

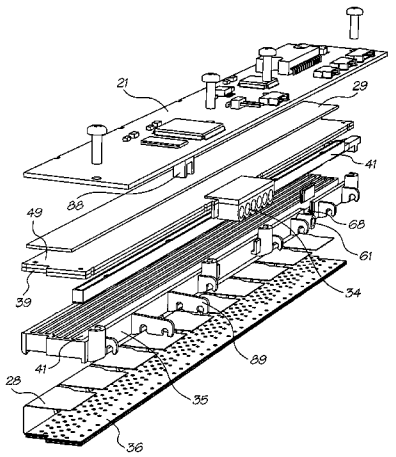

U.S. PATENT DOCUMENTS

5,757,398	A	5/1998	Anderson	
5,806,992	A	9/1998	Ju	
5,876,582	A	3/1999	Frazier	
5,929,877	A	7/1999	Hetzer et al.	
5,963,234	A	10/1999	Miyazawa et al.	
6,047,816	A	4/2000	Moghadam et al.	
6,065,825	A	5/2000	Anagnostopoulos et al.	
6,102,509	A	8/2000	Olson	
6,123,260	A	9/2000	Menzenski	
6,172,691	B1	1/2001	Belon et al.	
6,250,738	B1 *	6/2001	Waller et al.	347/42
6,259,808	B1	7/2001	Martinez et al.	
6,281,912	B1	8/2001	Silverbrook	
6,318,920	B1	11/2001	Silverbrook	
6,322,206	B1	11/2001	Boyd et al.	
6,350,013	B1	2/2002	Scheffelin et al.	
6,398,330	B1	6/2002	Chua et al.	
6,409,323	B1	6/2002	Silverbrook	
6,457,810	B1	10/2002	King et al.	
6,485,135	B1	11/2002	Foote et al.	
6,488,422	B1	12/2002	Silverbrook	
6,652,078	B2 *	11/2003	Silverbrook	347/65
6,796,731	B2 *	9/2004	Silverbrook	400/77

FOREIGN PATENT DOCUMENTS

EP	336870		10/1989
EP	566540	A	10/1993
EP	584823	A	3/1994
EP	597621	A	5/1994
EP	604029	A	6/1994
EP	694401	A	1/1996
EP	921008	A	6/1999
EP	1078755	A	2/2001
GB	2115748	A	9/1983
GB	2267255	A	12/1993
GB	2297521	A	8/1996
GB	2358947	A	8/2001
JP	59-115863	A	7/1984
JP	03-234539	A	10/1991
JP	08-324065	A	12/1996
JP	8-336984	A	12/1996
JP	09141858	A	6/1997
JP	10-138461	A	5/1998
JP	10-153453	A	6/1998
JP	10-193626	A	7/1998
JP	10264390	A	10/1998
JP	10-324003	A	12/1998
JP	11-179900	A	7/1999
WO	WO 01/42027		6/2001

OTHER PUBLICATIONS

Derwent Abstract Accession No 98-461584/40, Class T04, JP 10-193626 (Brother Kogyo KK) Jul. 28, 1998 Abstract.

* cited by examiner

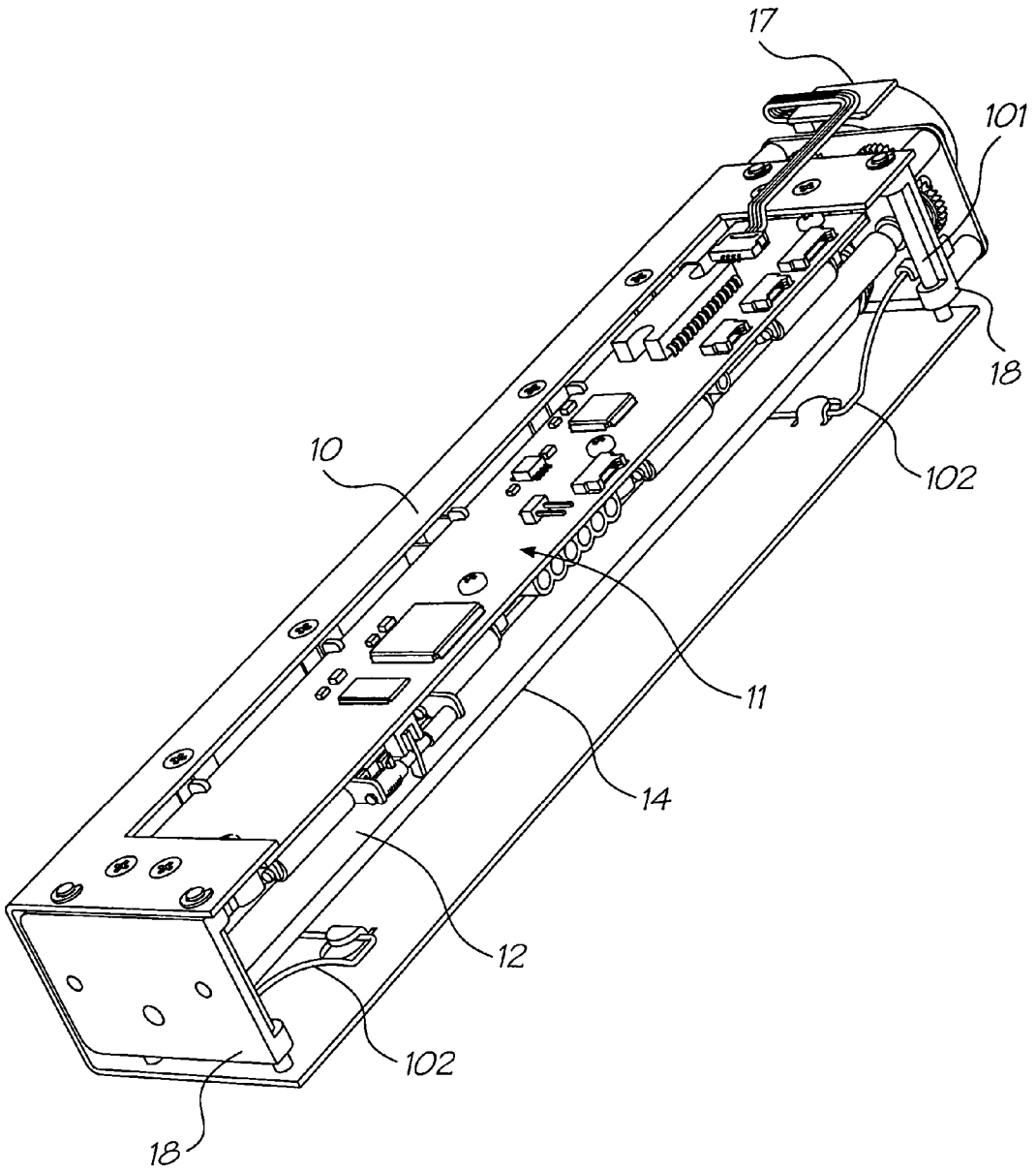

FIG. 1

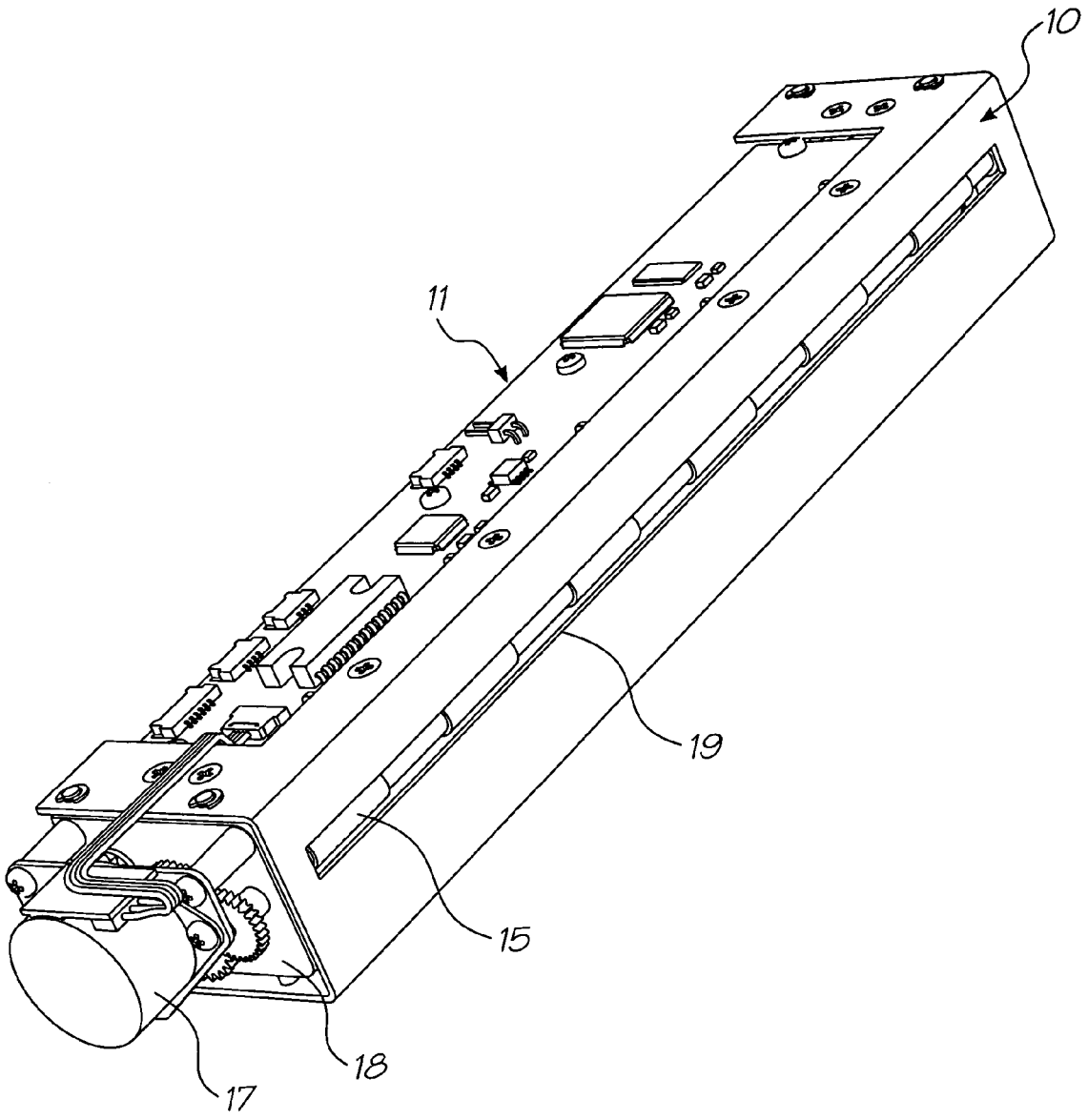

FIG. 2

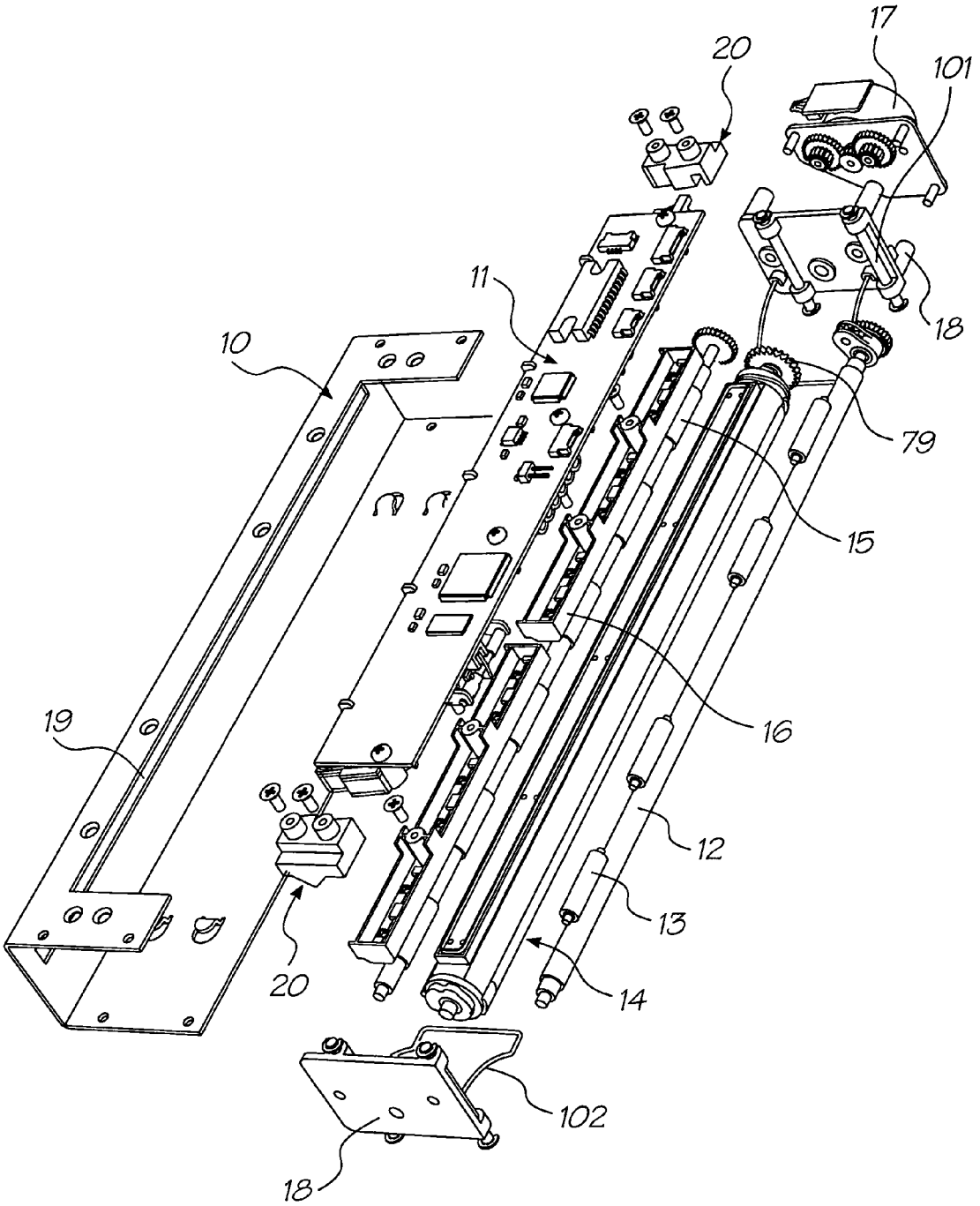

FIG. 3

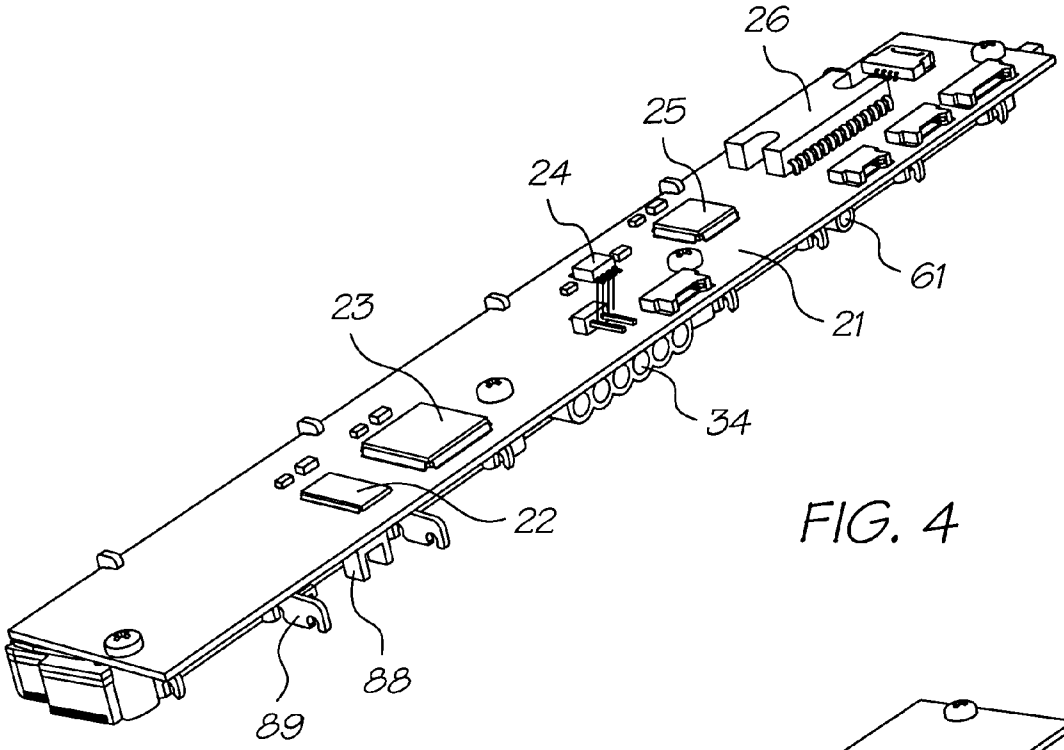

FIG. 4

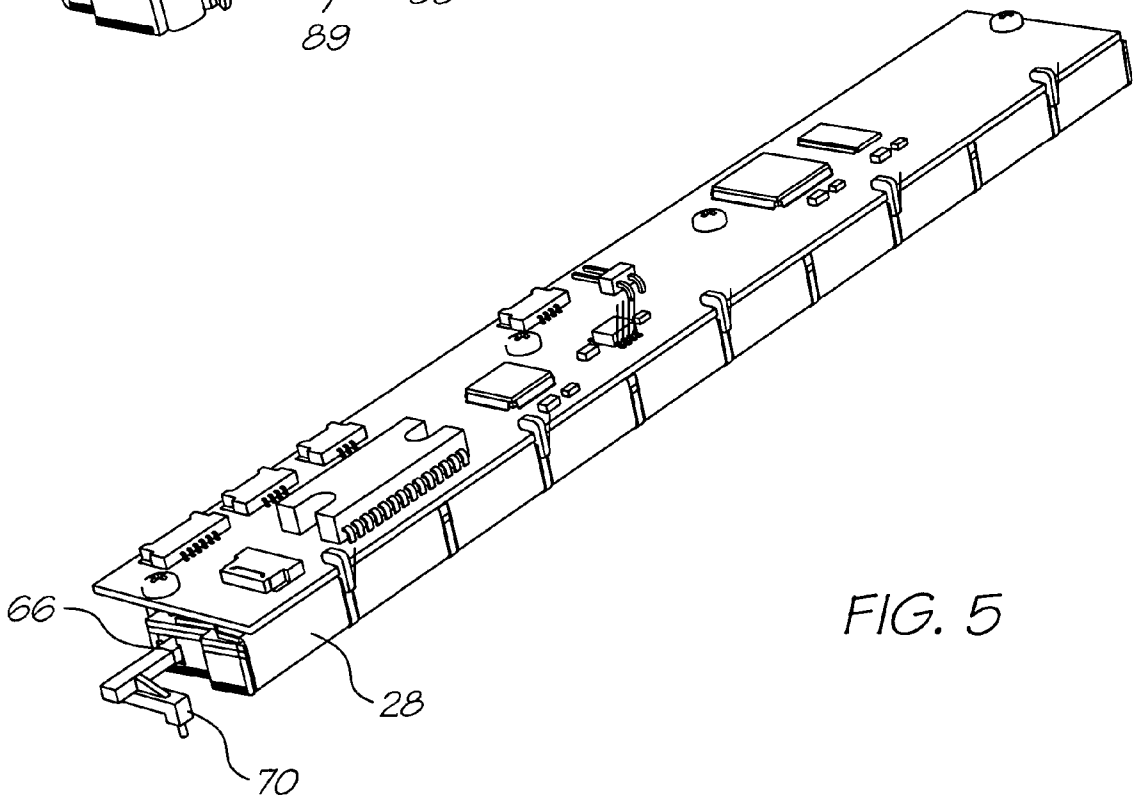

FIG. 5

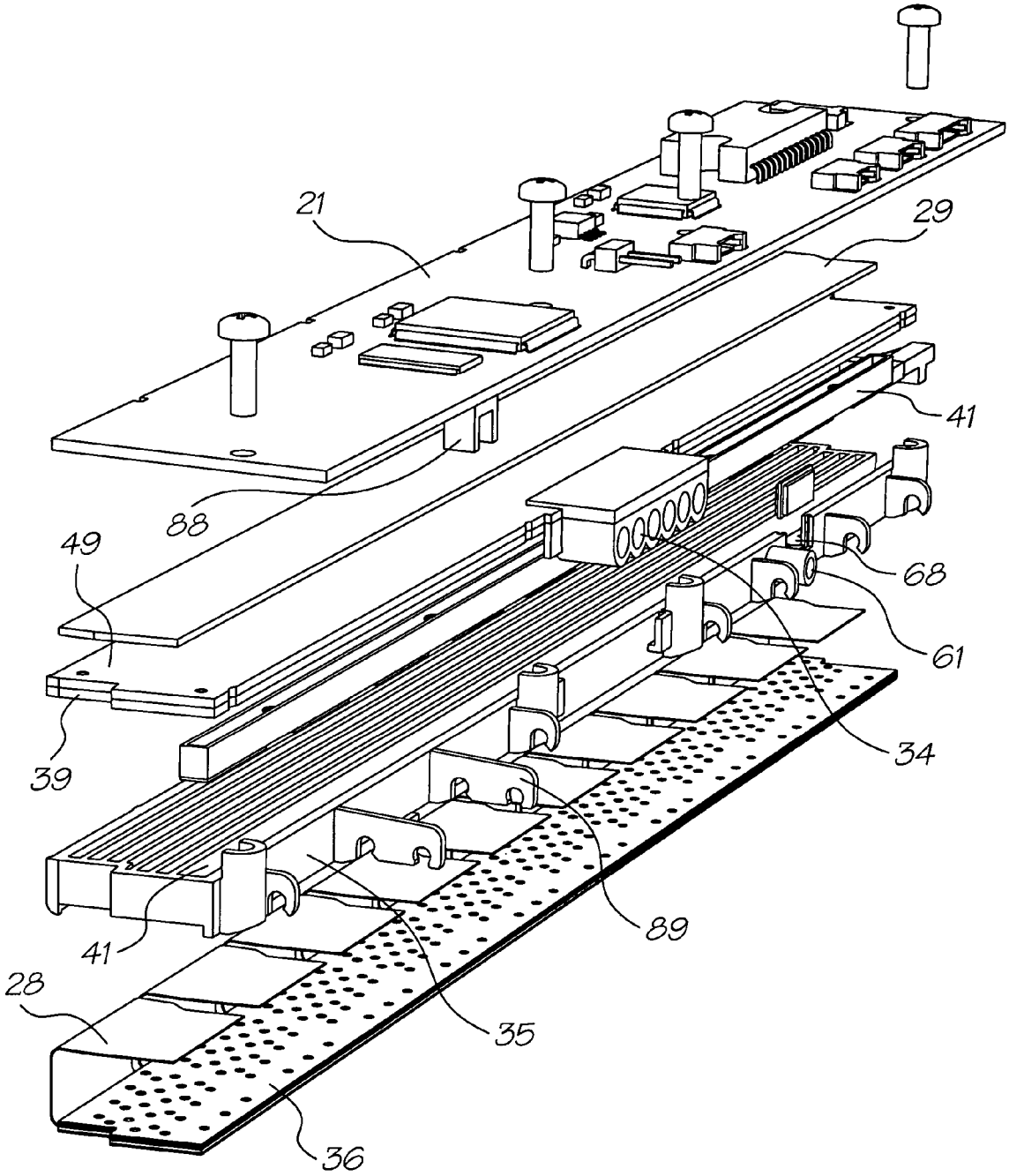

FIG. 6

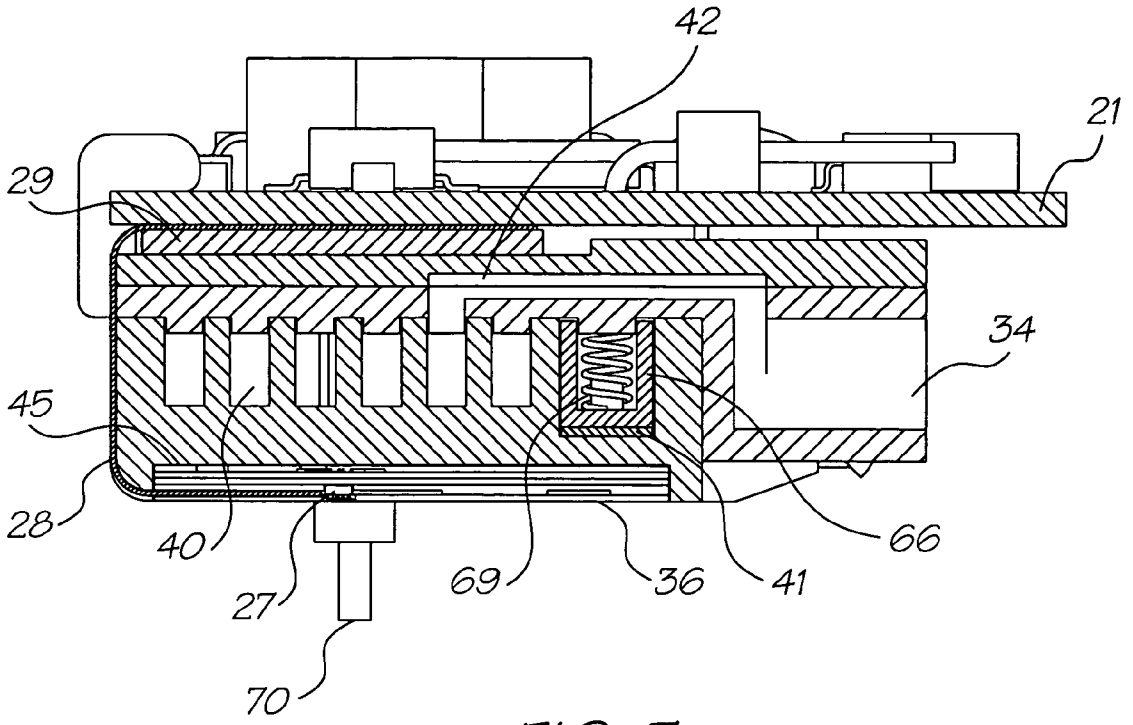

FIG. 7

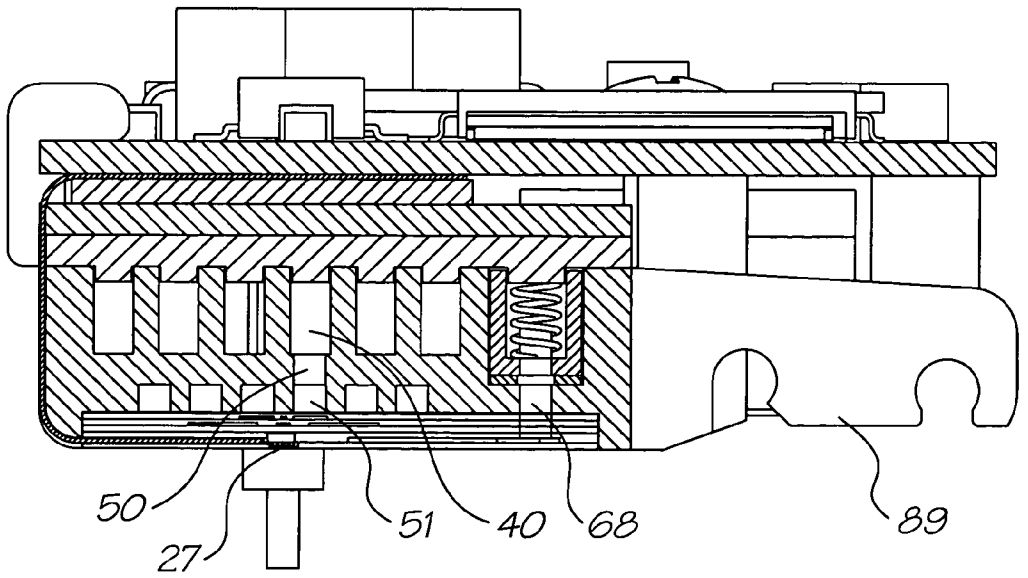

FIG. 8

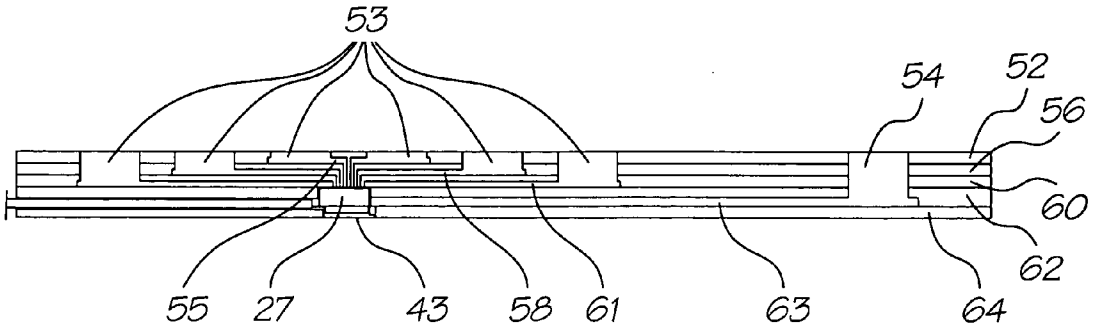
53
54
52
56
60
62
55
27
43
58
61
63
64

FIG. 9a

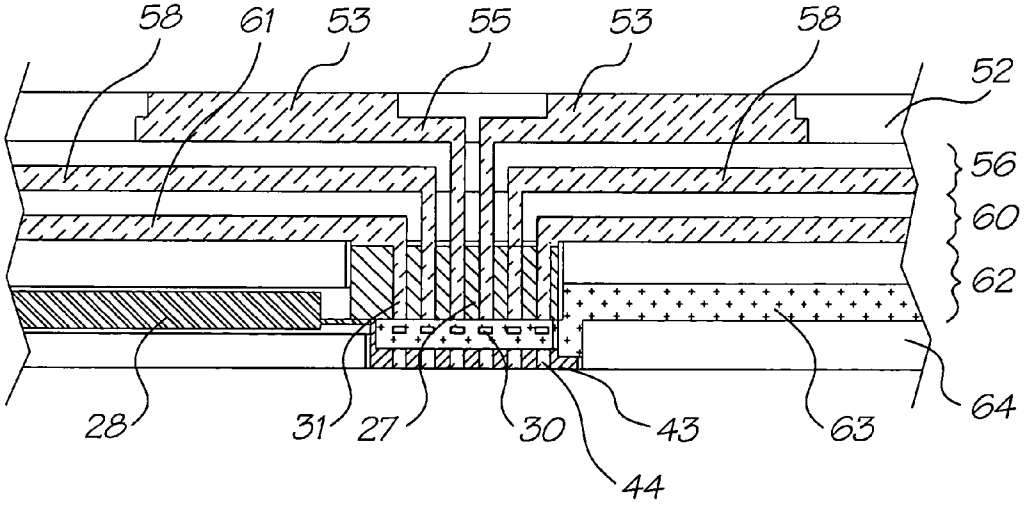
58
61
53
55
53
58
52
56
60
62
28
31
27
30
43
44
63
64

FIG. 9b

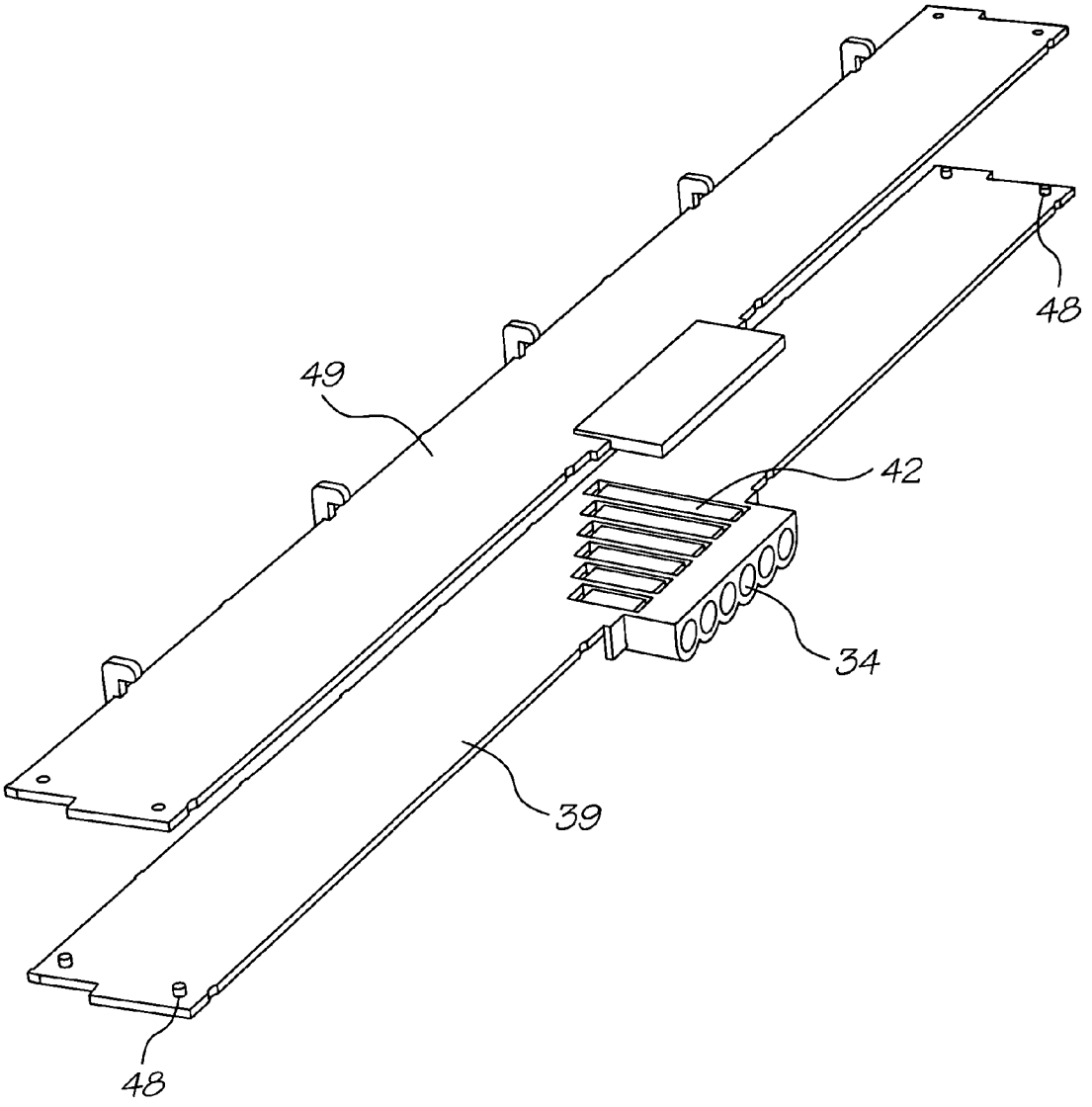

FIG. 10

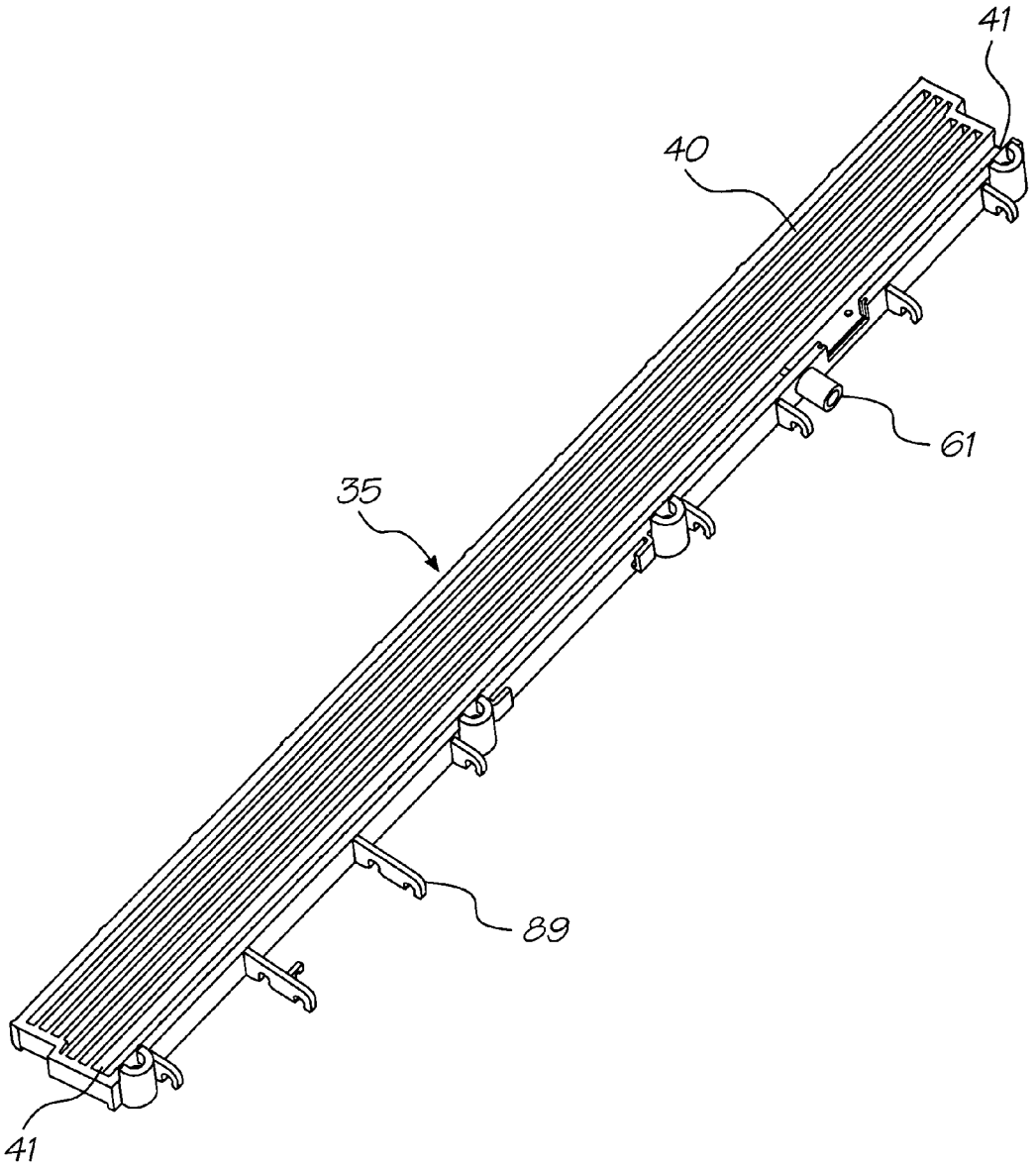

FIG. 11

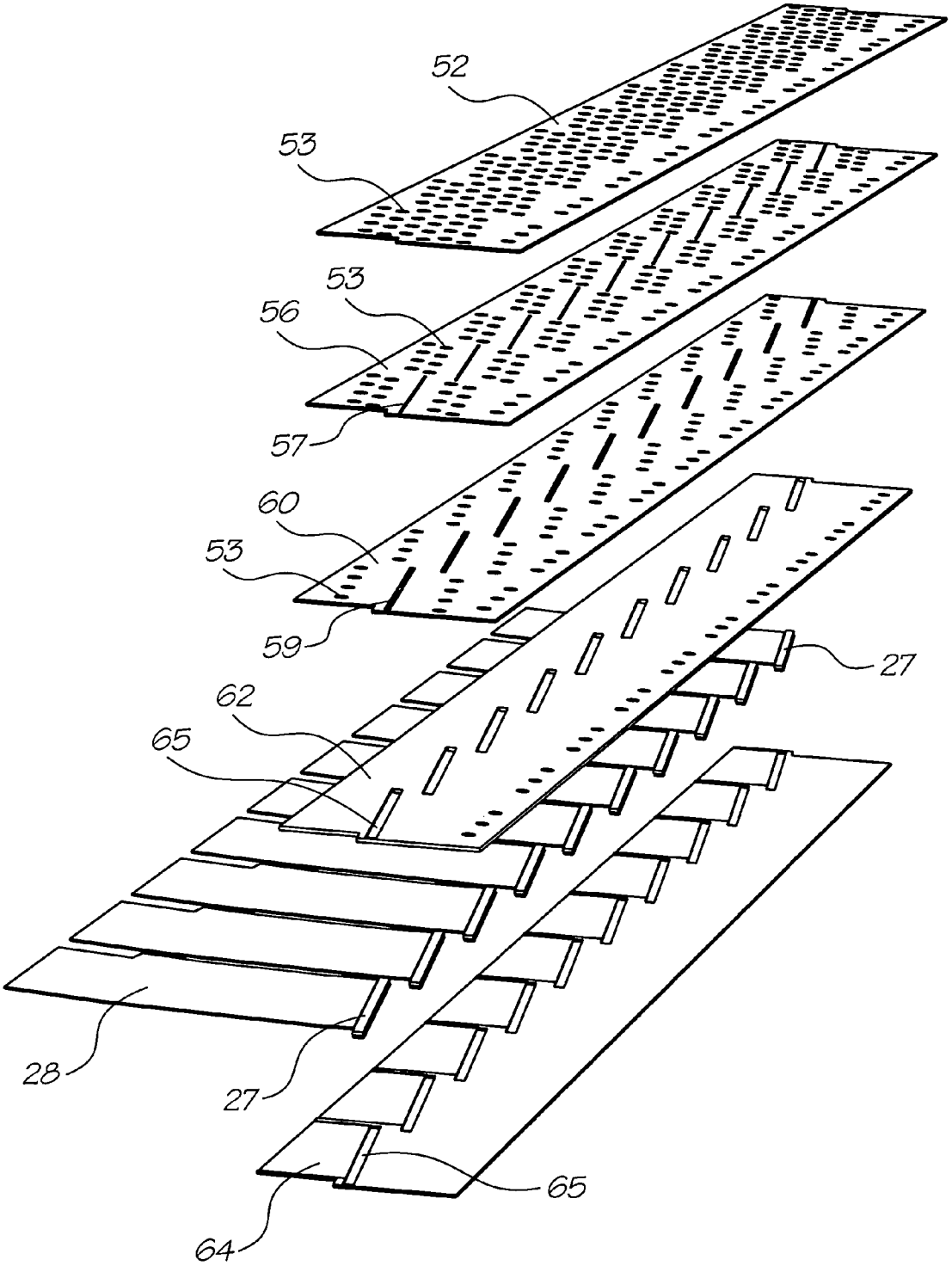

FIG. 12

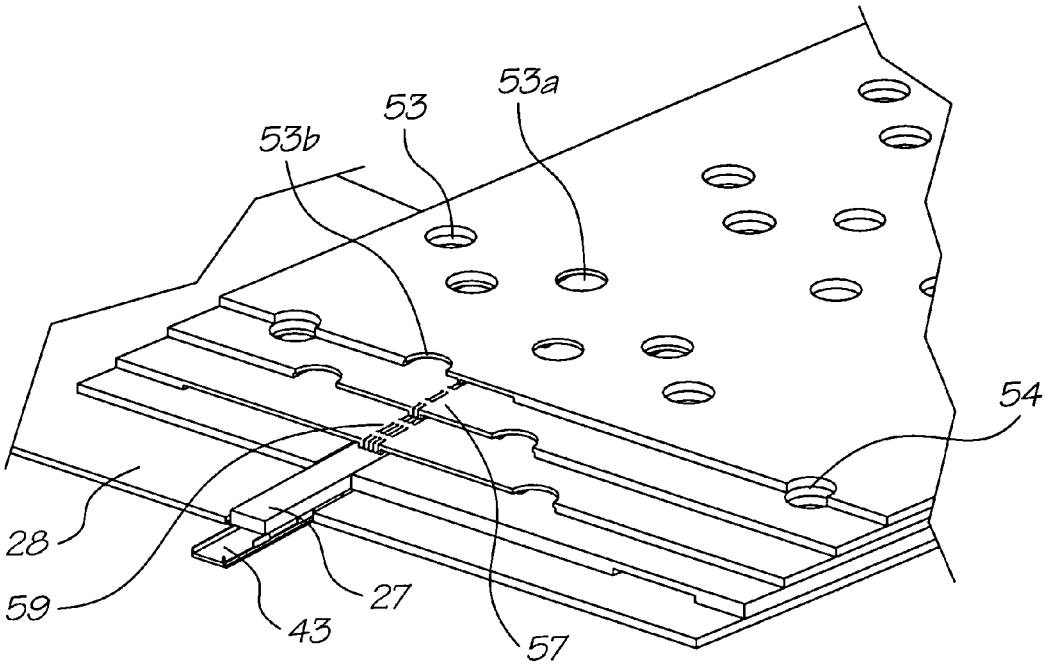
53
53a
53b
54
28
59
43
27
57

FIG. 13

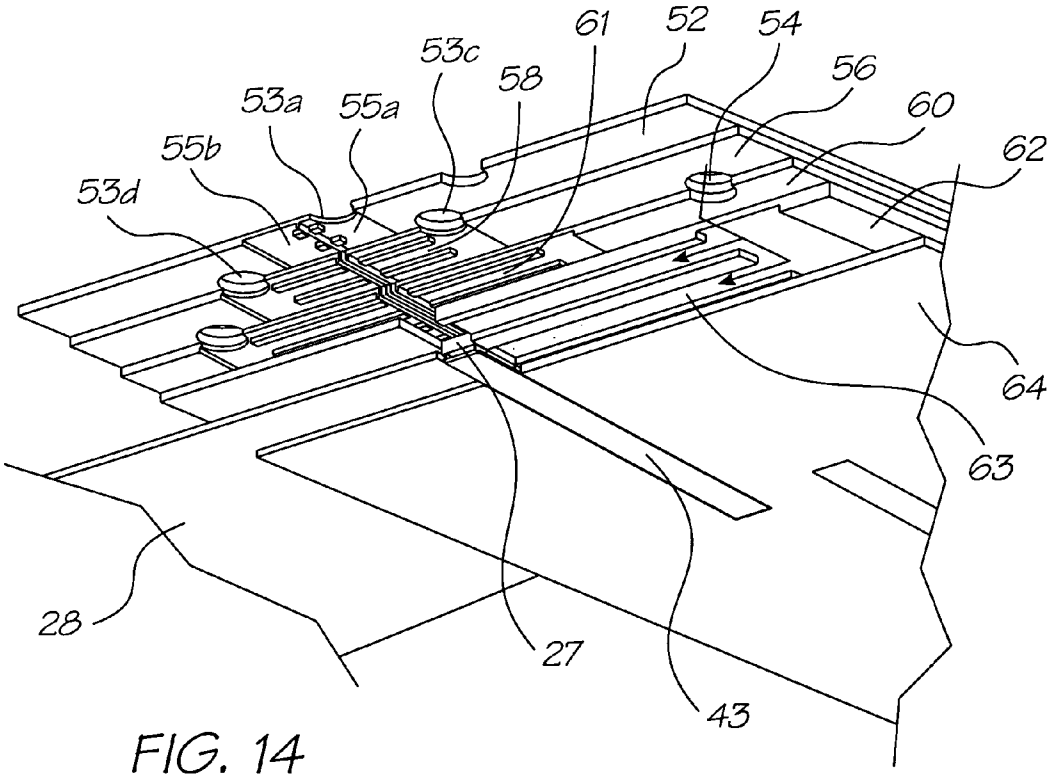
61
52
54
53c
58
56
53a
55a
60
55b
62
53d
64
63
28
27
43

FIG. 14

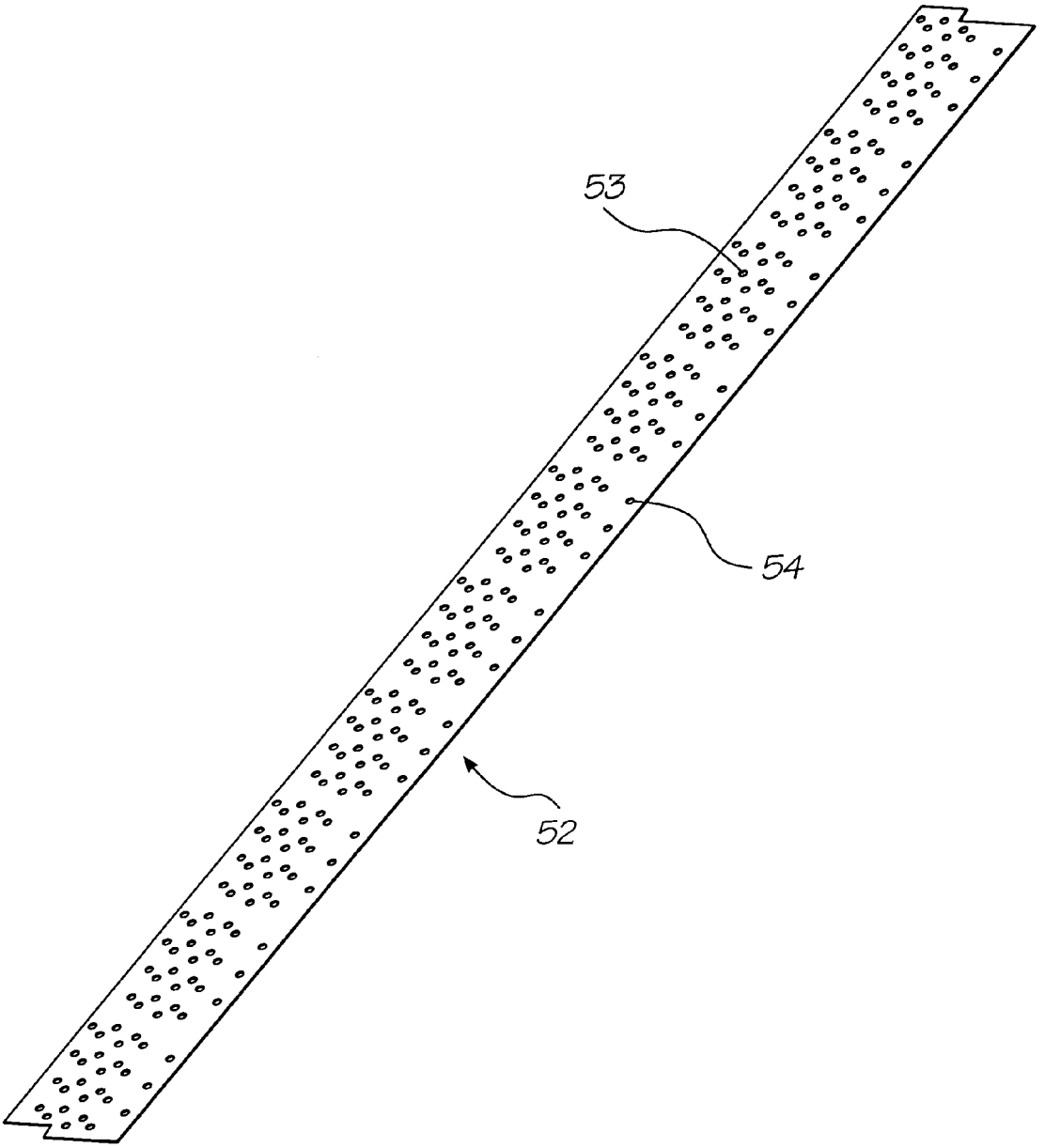

FIG. 15

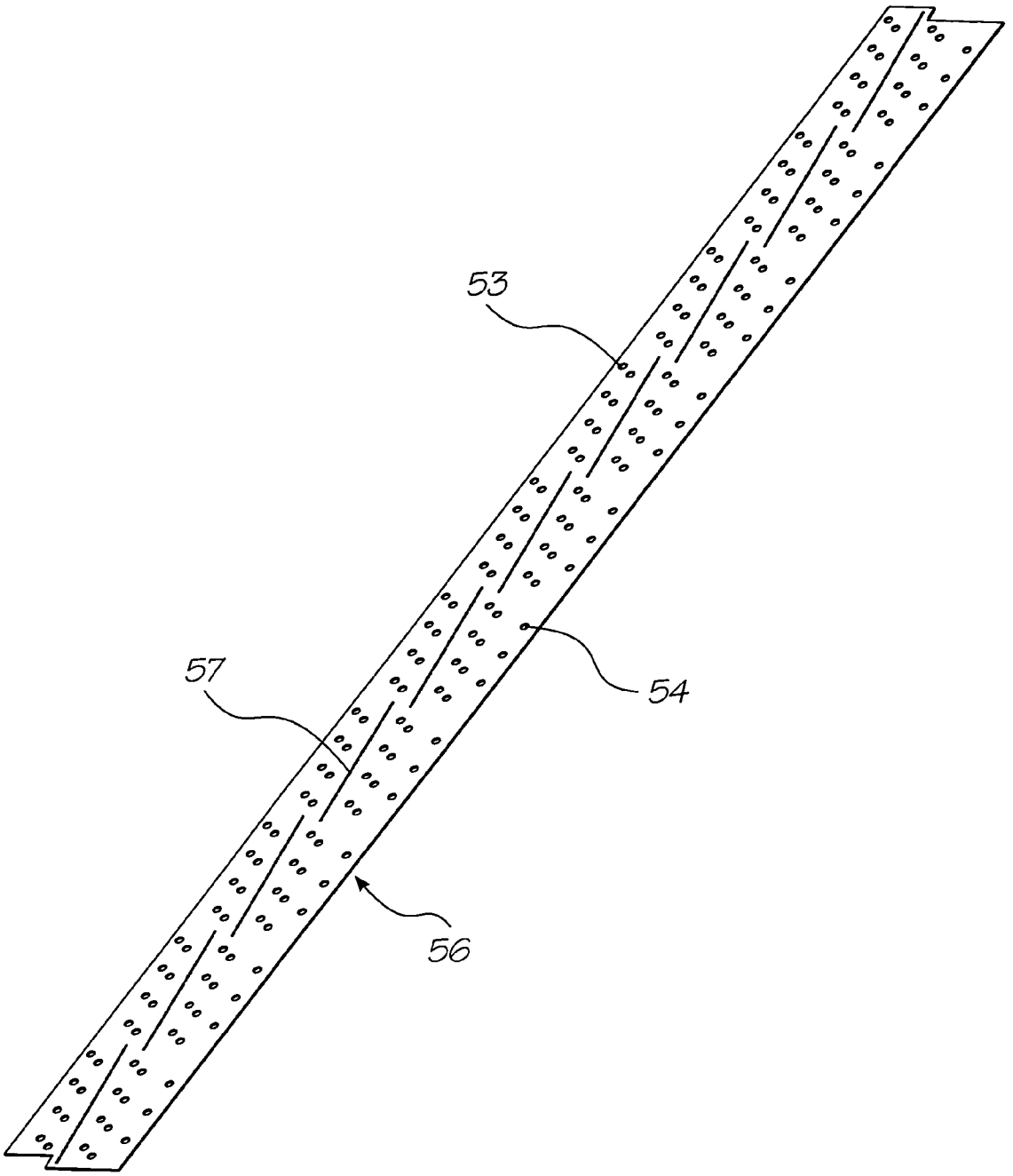

FIG. 16

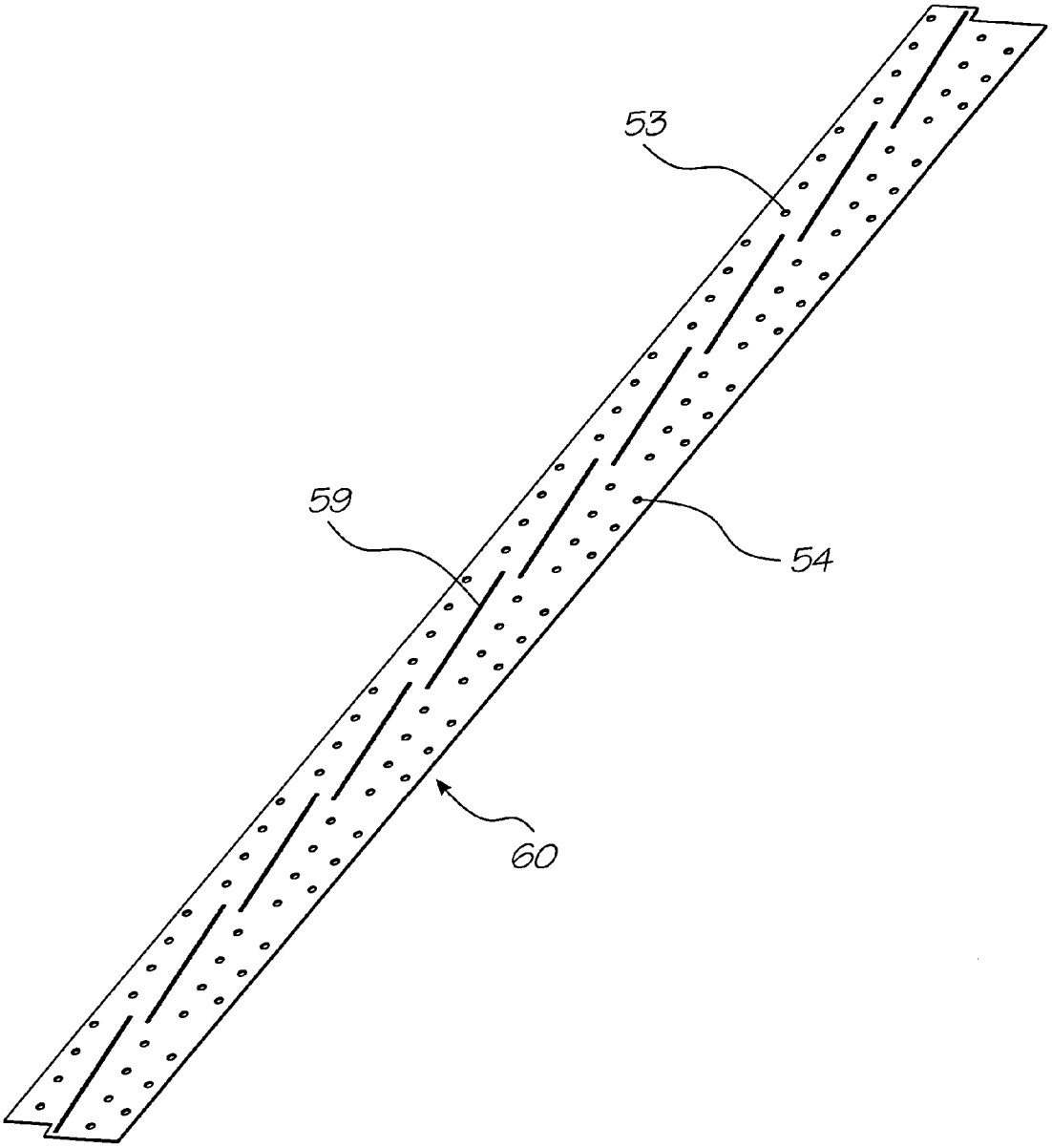

FIG. 17

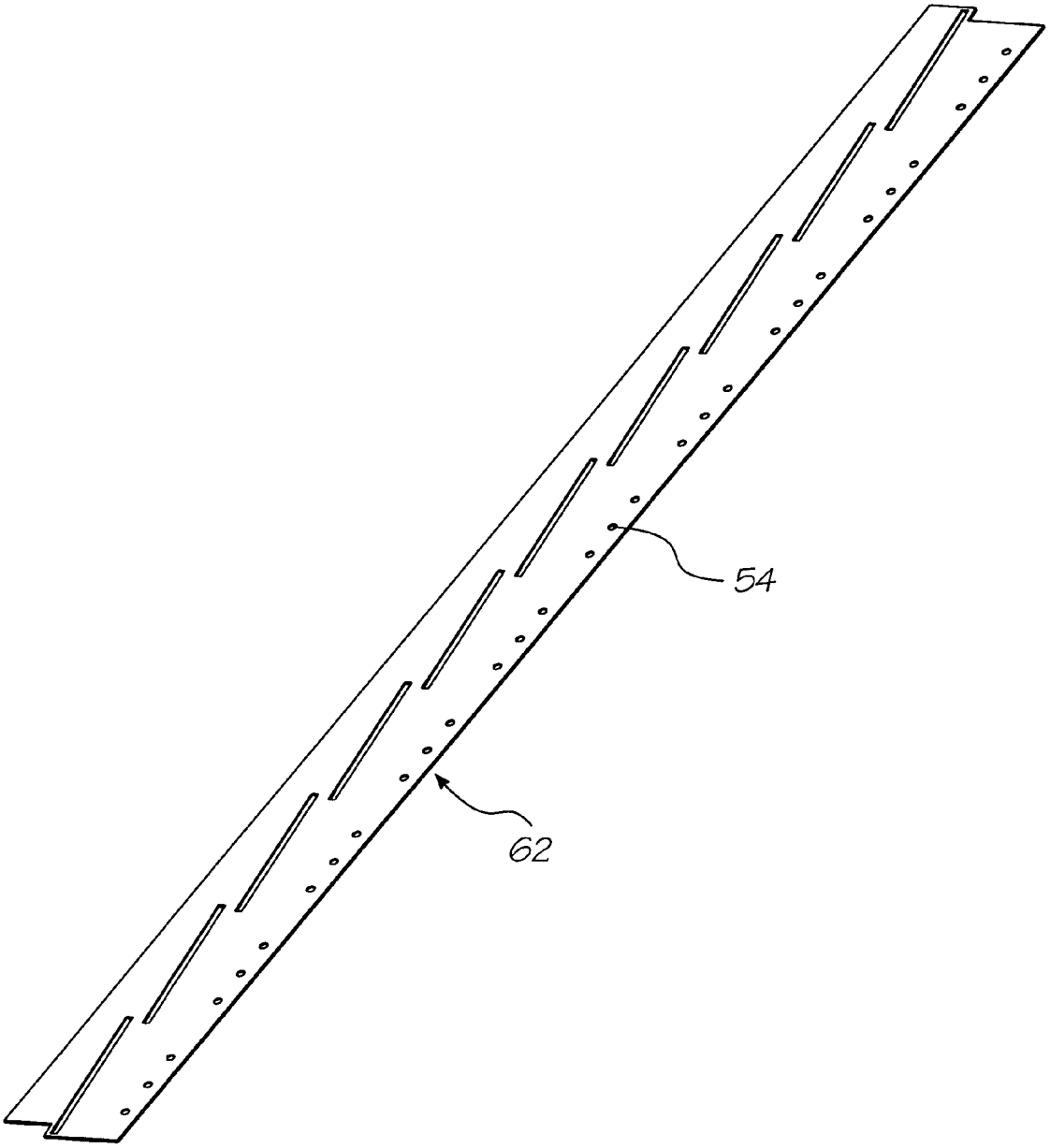

FIG. 18

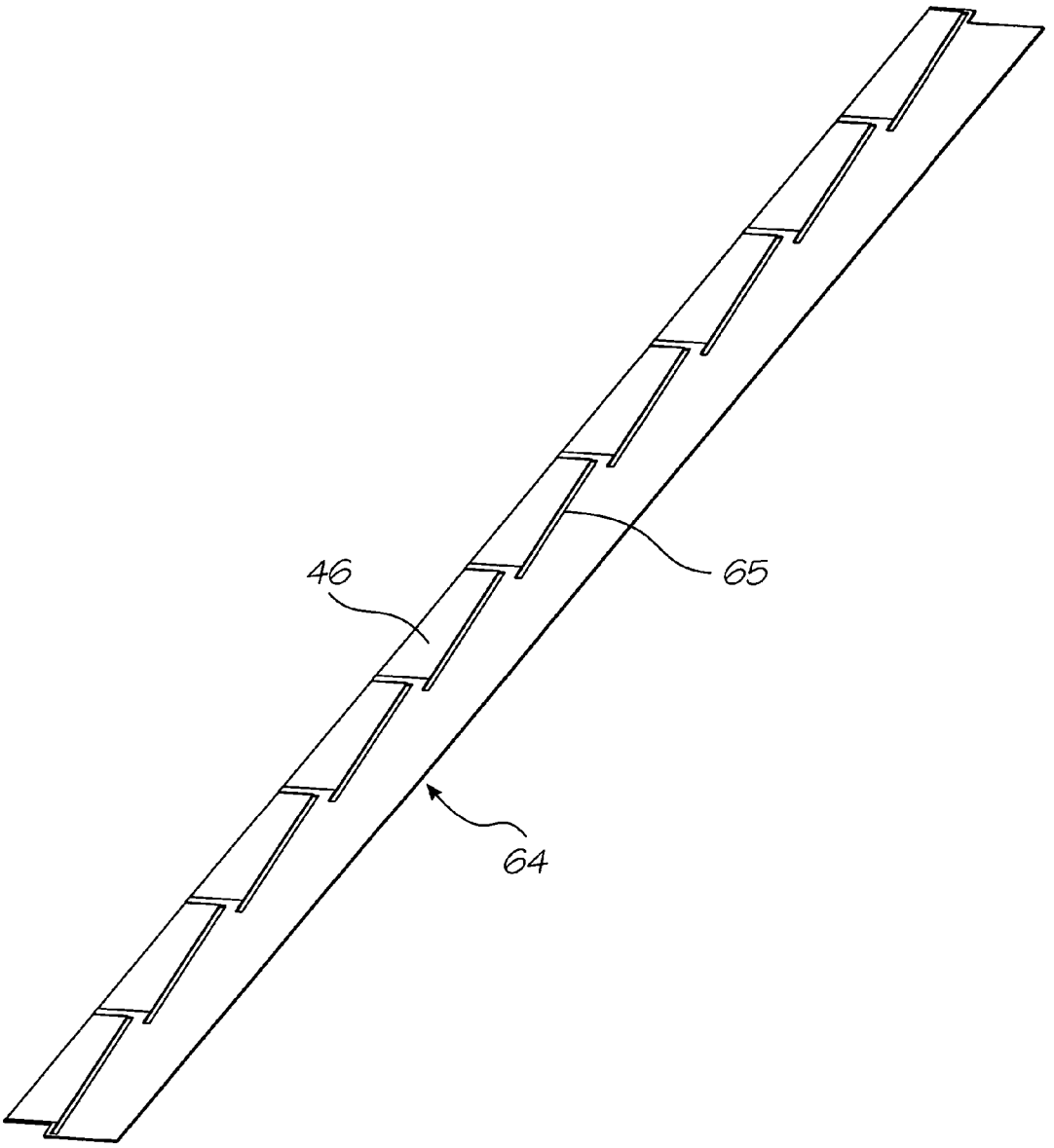

FIG. 19

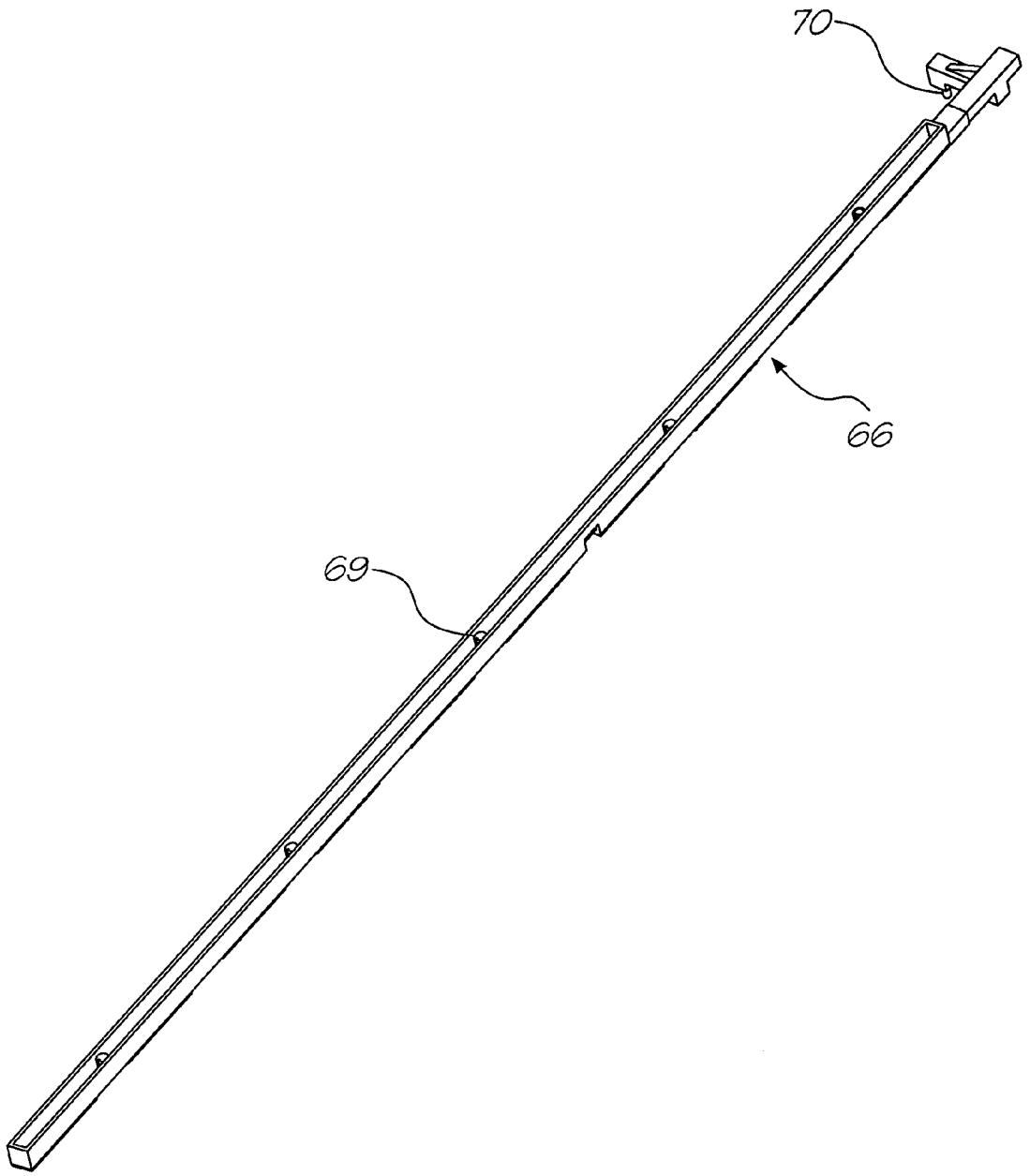

FIG. 20

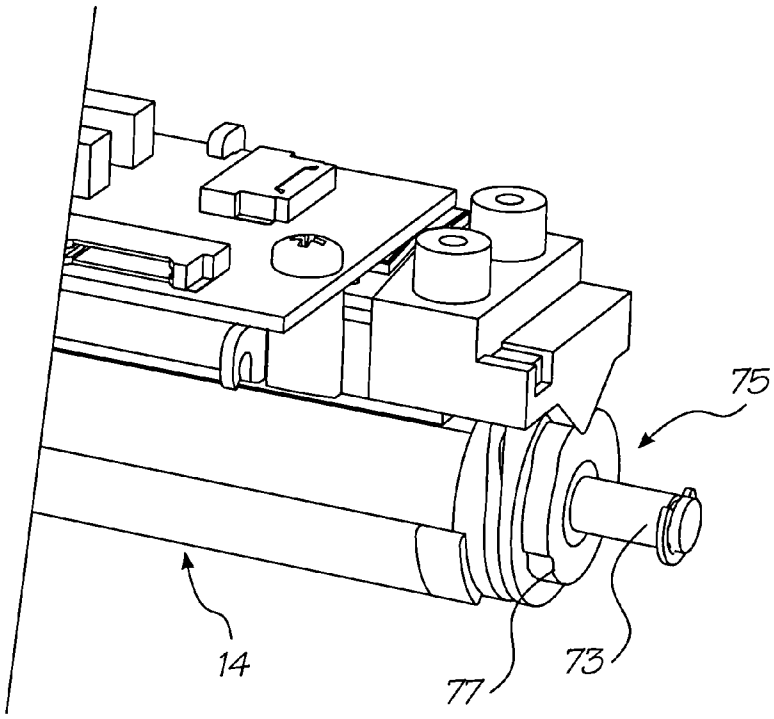

FIG. 22

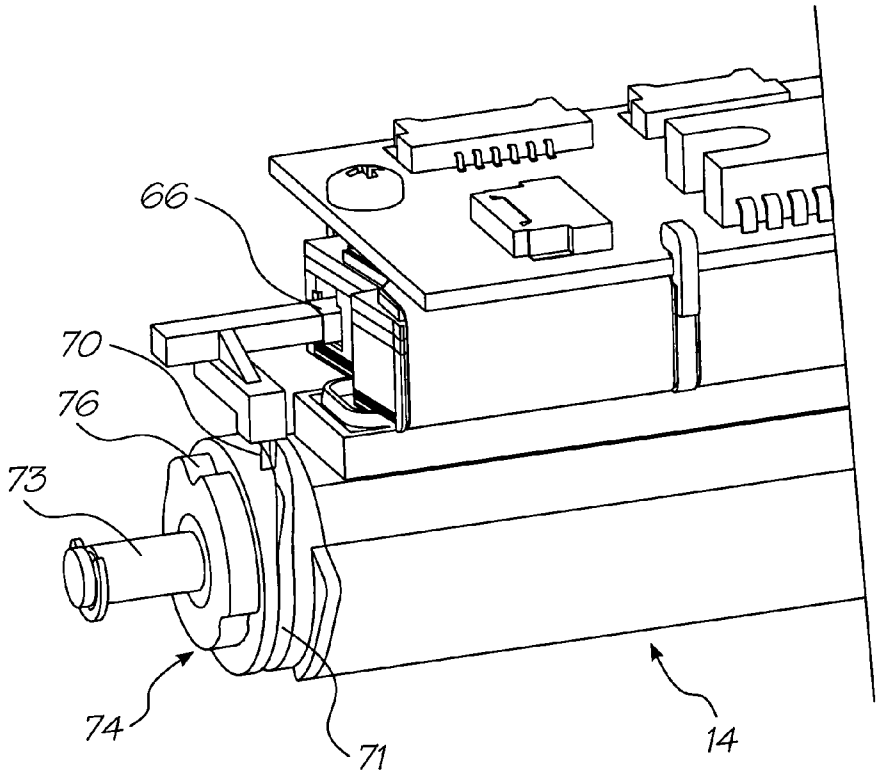

FIG. 21

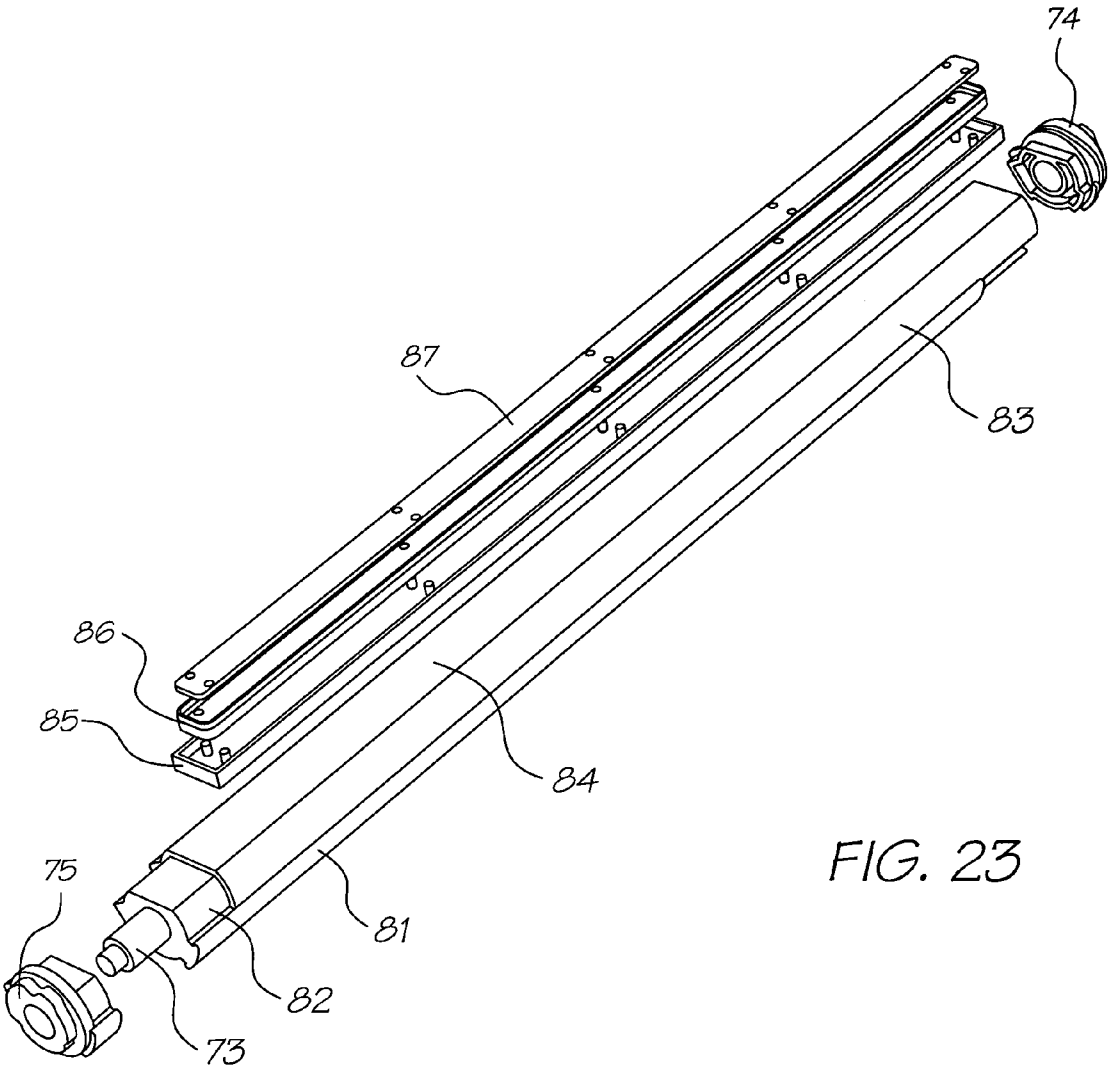

FIG. 23

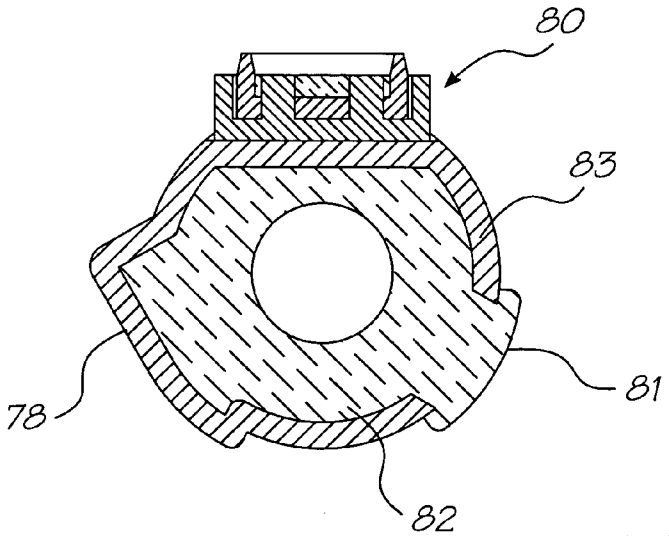

FIG. 24

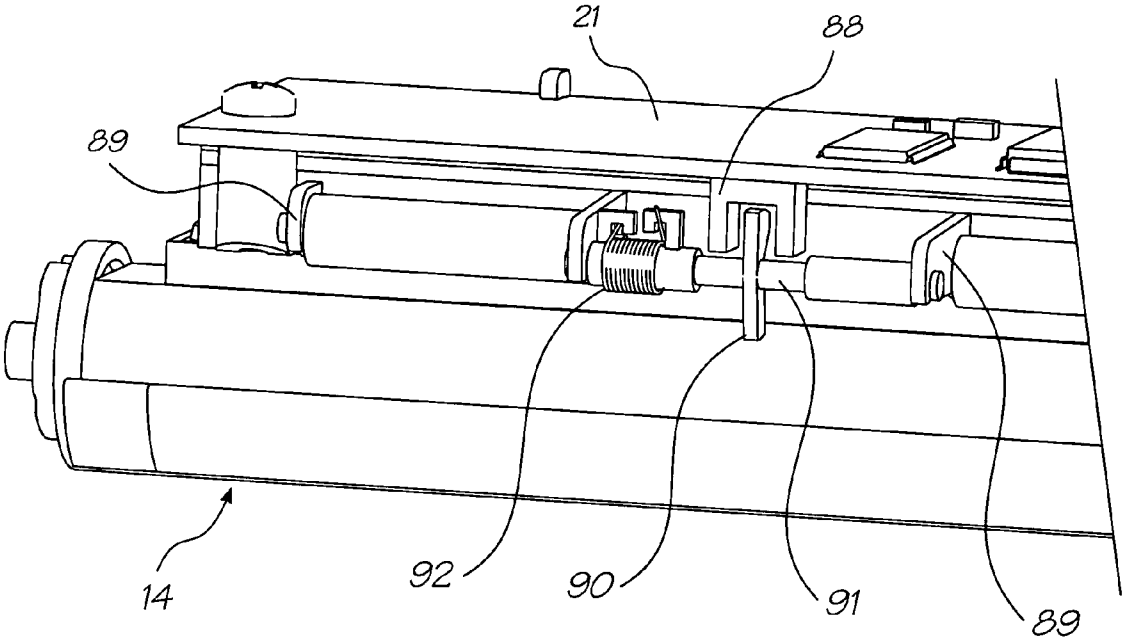

FIG. 25

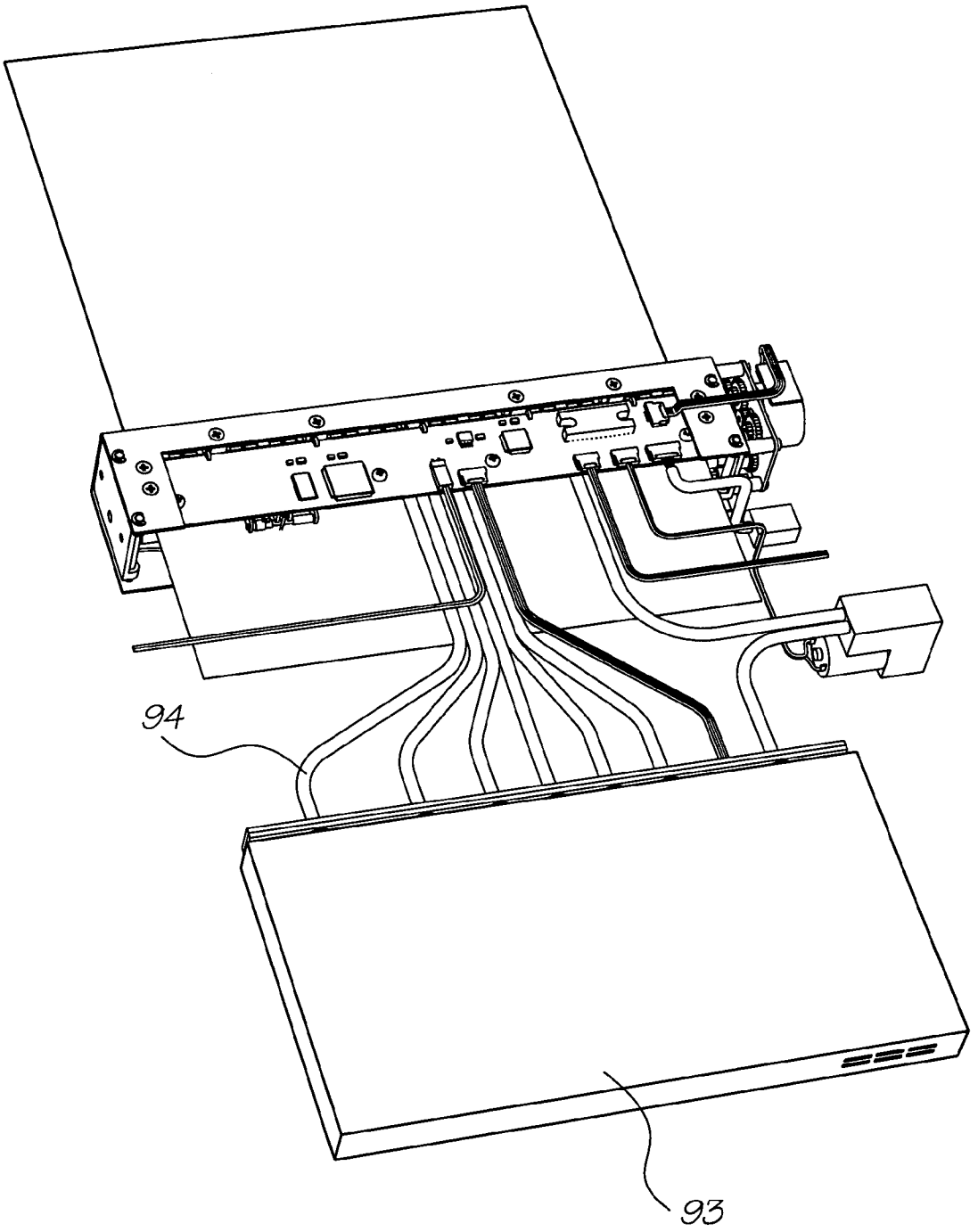

FIG. 26

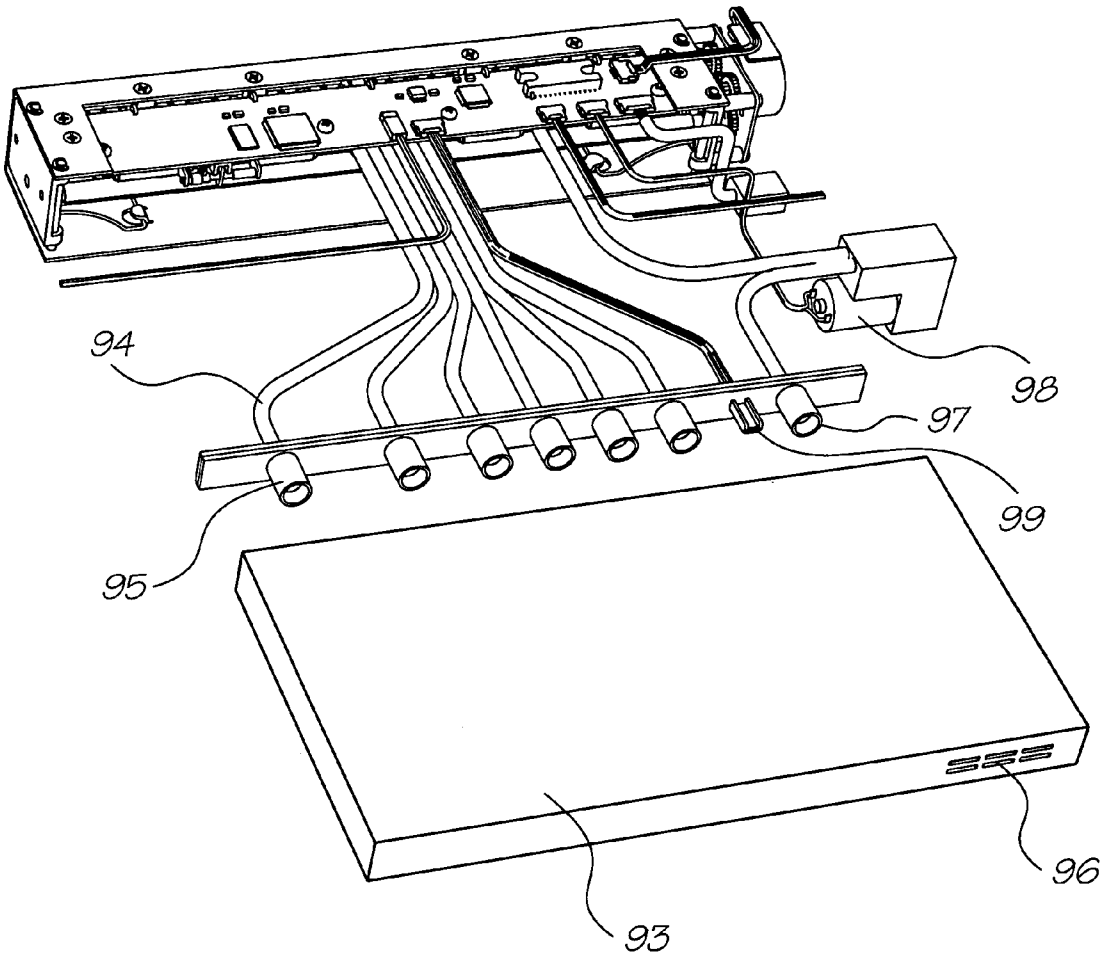

FIG. 27

INK AND AIR DISTRIBUTION WITHIN A PRINTER ASSEMBLY

This is a Continuation Application of U.S. application Ser. No. 10/172,024, filed on Jun. 17, 2002, now issued as U.S. Pat. No. 6,796,731, which is a Continuation Application of U.S. application Ser. No. 09/575,111 filed on May 23, 2000, now issued as U.S. Pat. No. 6,488,422, the entire contents of which are herein incorporated by reference.

CO-PENDING APPLICATIONS

Various methods, systems and apparatus relating to the present invention are disclosed in the following co-pending applications filed by the applicant or assignee of the present invention simultaneously with the present application:

09/575,197	09/575,195	09/575,159
09/575,132,	09/575,123	09/575,148
09/575,130	09/575,165	09/575,153
09/575,118	09/575,131	09/575,116
09/575,144	09/575,139	09/575,186
09/575,185	09/575,191	09/575,145
09/575,192	09/575,181	09/575,193
09/575,156	09/575,183	09/575,160
09/575,150	09/575,169	09/575,184
09/575,128	09/575,180	09/575,149
09/575,179	09/575,133	09/575,143
09/575,187	09/575,155	09/575,196
09/575,198	09/575,178	09/575,164
09/575,146	09/575,174	09/575,163
09/575,168	09/575,154	09/575,129
09/575,124	09/575,188	09/575,189
09/575,162	09/575,172	09/575,170
09/575,171	09/575,161	09/575,141
09/575,125	09/575,142	09/575,140
09/575,190	09/575,138	09/575,126
09/575,127	09/575,158	09/575,117
09/575,147	09/575,152	09/575,176
09/575,151	09/575,177	09/575,175
09/575,115	09/575,114	09/575,113
09/575,112	09/575,111	09/575,108
09/575,109	09/575,110	09/575,182
09/575,173	09/575,194	09/575,136
09/575,119	09/575,135	09/575,157
09/575,166	09/575,134	09/575,121
09/575,137	09/575,167	09/575,120
09/575,122		

The disclosures of these co-pending applications are incorporated herein by reference.

BACKGROUND OF THE INVENTION

The following invention relates to a laminated ink distribution structure for a printer.

More particularly, though not exclusively, the invention relates to a laminated ink distribution structure and assembly for an A4 pagewidth drop on demand printhead capable of printing up to 1600 dpi photographic quality at up to 160 pages per minute.

The overall design of a printer in which the structure/assembly can be utilized revolves around the use of replaceable printhead modules in an array approximately 8 inches (20 cm) long. An advantage of such a system is the ability to easily remove and replace any defective modules in a printhead array. This would eliminate having to scrap an entire printhead if only one chip is defective.

A printhead module in such a printer can be comprised of a "Memjet" chip, being a chip having mounted thereon a vast number of thermo-actuators in micro-mechanics and micro-electromechanical systems (MEMS). Such actuators might be those as disclosed in U.S. Pat. No. 6,044,646 to the present applicant, however, there might be other MEMS print chips.

The printhead, being the environment within which the laminated ink distribution housing of the present invention is to be situated, might typically have six ink chambers and be capable of printing four color process (CMYK) as well as infra-red ink and fixative. An air pump would supply filtered air to the printhead, which could be used to keep foreign particles away from its ink nozzles. The printhead module is typically to be connected to a replaceable cassette which contains the ink supply and an air filter.

Each printhead module receives ink via a distribution molding that transfers the ink. Typically, ten modules butt together to form a complete eight inch printhead assembly suitable for printing A4 paper without the need for scanning movement of the printhead across the paper width.

The printheads themselves are modular, so complete eight inch printhead arrays can be configured to form printheads of arbitrary width.

Additionally, a second printhead assembly can be mounted on the opposite side of a paper feed path to enable double-sided high speed printing.

OBJECTS OF THE INVENTION

It is an object of the present invention to provide an ink distribution assembly for a printer.

It is another object of the present invention to provide an ink distribution structure suitable for the pagewidth printhead assembly as broadly described herein.

It is another object of the present invention to provide a laminated ink distribution assembly for a printhead assembly on which there is mounted a plurality of print chips, each comprising a plurality of MEMS printing devices.

It is yet another object of the present invention to provide a method of distributing ink to print chips in a printhead assembly of a printer.

SUMMARY OF THE INVENTION

The present invention provides an ink distribution assembly for a printhead to which there is mounted an array of print chips, the assembly serving to distribute different inks from respective ink sources to each said print chip for printing on a sheet, the assembly comprising:

a longitudinal distribution housing having a duct for each said different ink extending longitudinally therealong,

a cover having an ink inlet port corresponding to each said duct for connection to each said ink source and for delivering said ink from each said ink source to a respective one of said ink ducts, and

a laminated ink distribution structure fixed to said distribution housing and distributing ink from said ducts to said print chips.

Preferably the laminated ink distribution structure includes multiple layers situated one upon another with at least one of said layers having a plurality of ink holes therethrough, each ink hole conveying ink from one of said ducts enroute to one of said print chips.

Preferably one or more of said layers includes ink slots therethrough, the slots conveying ink from one or more of said ink holes in an adjacent layer enroute to one of said print chips.

Preferably, the slots are located with ink holes spaced laterally to either side thereof.

Preferably the layers of the laminated structure sequenced from the distribution housing to the array of print chips include fewer and fewer said ink holes.

Preferably one or more of said layers includes recesses in the underside thereof communicating with said holes and transferring ink therefrom transversely between the layers enroute to one of said slots.

Preferably the channels extend from the holes toward an inner portion of the laminated structure over the array of print chips, which inner portion includes said slots.

Preferably each layer of the laminated is a micro-molded plastics layer.

Preferably, the layers are adhered to one another.

Preferably, the slots are parallel with one another.

Preferably, at least two adjacent ones of said layers have an array of aligned air holes therethrough.

The present invention also provides a laminated ink distribution structure for a printhead, the structure comprising:

a number of layers adhered to one another, each layer including a plurality of ink holes formed therethrough, each ink hole having communicating therewith a recess formed in one side of the layer and allowing passage of ink to a transversely located position upon the layer, which transversely located position aligns with a slot formed through an adjacent layer.

Preferably the slot in any layer of the structure is aligned with another slot in an adjacent layer of the structure and the aligned slots are aligned with a respective print chip slot formed in a final layer of the structure.

Preferably the layers are micro-molded plastics layers.

The present invention also provides a method of distributing ink to an array of print chips in a printhead assembly, the method serving to distribute different inks from respective ink sources to each said print chip for printing on a sheet, the method comprising:

supplying individual sources of ink to a longitudinal distribution molding having a duct for each said different ink extending longitudinally therealong,

causing ink to pass along the individual ducts for distribution thereby into a laminated ink distribution structure fixed to the distribution housing, wherein

the laminated ink distribution structure enables the passage therethrough of the individual ink supplies to the print chips, which print chips selectively eject the ink onto a sheet.

The present invention also provides a method of distributing ink to print chips in a printhead assembly of a printer, the method utilizing a laminated ink distributing structure formed as a number of micro-molded layers adhered to one another with each layer including a plurality of ink holes formed therethrough, each ink hole communicating with a channel formed in one side of a said layer and allowing passage of ink to a transversely located position within the structure, which transversely located position aligns with an aperture formed through an adjacent layer of the laminated structure, an adjacent layer or layers of the laminated structure also including slots through which ink passes to the print chips.

As used herein, the term "ink" is intended to mean any fluid which flows through the printhead to be delivered to a sheet. The fluid may be one of many different coloured inks, infra-red ink, a fixative or the like.

BRIEF DESCRIPTION OF THE DRAWINGS

A preferred form of the present invention will now be described by way of example with reference to the accompanying drawings wherein:

FIG. **1** is a front perspective view of a print engine assembly

FIG. **2** is a rear perspective view of the print engine assembly of FIG. **1**

FIG. **3** is an exploded perspective view of the print engine assembly of FIG. **1**.

FIG. **4** is a schematic front perspective view of a printhead assembly.

FIG. **5** is a rear schematic perspective view of the printhead assembly of FIG. **4**.

FIG. **6** is an exploded perspective illustration of the printhead assembly.

FIG. **7** is a cross-sectional end elevational view of the printhead assembly of FIGS. **4** to **6** with the section taken through the centre of the printhead.

FIG. **8** is a schematic cross-sectional end elevational view of the printhead assembly of FIGS. **4** to **6** taken near the left end of FIG. **4**.

FIG. **9**A is a schematic end elevational view of mounting of the print chip and nozzle guard in the laminated stack structure of the printhead

FIG. **9**B is an enlarged end elevational cross section of FIG. **9**A

FIG. **10** is an exploded perspective illustration of a printhead cover assembly.

FIG. **11** is a schematic perspective illustration of an ink distribution molding.

FIG. **12** is an exploded perspective illustration showing the layers forming part of a laminated ink distribution structure according to the present invention.

FIG. **13** is a stepped sectional view from above of the structure depicted in FIGS. **9**A and **9**B,

FIG. **14** is a stepped sectional view from below of the structure depicted in FIG. **13**.

FIG. **15** is a schematic perspective illustration of a first laminate layer.

FIG. **16** is a schematic perspective illustration of a second laminate layer.

FIG. **17** is a schematic perspective illustration of a third laminate layer.

FIG. **18** is a schematic perspective illustration of a fourth laminate layer.

FIG. **19** is a schematic perspective illustration of a fifth laminate layer.

FIG. **20** is a perspective view of the air valve molding

FIG. **21** is a rear perspective view of the right hand end of the platen

FIG. **22** is a rear perspective view of the left hand end of the platen

FIG. **23** is an exploded view of the platen

FIG. **24** is a transverse cross-sectional view of the platen

FIG. **25** is a front perspective view of the optical paper sensor arrangement

FIG. **26** is a schematic perspective illustration of a printhead assembly and ink lines attached to an ink reservoir cassette.

FIG. **27** is a partly exploded view of FIG. **26**.

DETAILED DESCRIPTION OF THE INVENTION

In FIGS. **1** to **3** of the accompanying drawings there is schematically depicted the core components of a print engine assembly, showing the general environment in which the laminated ink distribution structure of the present invention can be located. The print engine assembly includes a chassis **10** fabricated from pressed steel, aluminium, plastics or other rigid material. Chassis **10** is intended to be mounted within the body of a printer and serves to mount a printhead assembly **11**, a paper feed mechanism and other related components within the external plastics casing of a printer.

In general terms, the chassis **10** supports the printhead assembly **11** such that ink is ejected therefrom and onto a sheet of paper or other print medium being transported below the printhead then through exit slot **19** by the feed mechanism. The paper feed mechanism includes a feed roller **12**, feed idler rollers **13**, a platen generally designated as **14**, exit rollers **15** and a pin wheel assembly **16**, all driven by a stepper motor **17**. These paper feed components are mounted between a pair of bearing moldings **18**, which are in turn mounted to the chassis **10** at each respective end thereof.

A printhead assembly **11** is mounted to the chassis **10** by means of respective printhead spacers **20** mounted to the chassis **10**. The spacer moldings **20** increase the printhead assembly length to 220 mm allowing clearance on either side of 210 mm wide paper.

The printhead construction is shown generally in FIGS. **4** to **8**.

The printhead assembly **11** includes a printed circuit board (PCB) **21** having mounted thereon various electronic components including a 64 MB DRAM **22**, a PEC chip **23**, a QA chip connector **24**, a microcontroller **25**, and a dual motor driver chip **26**. The printhead is typically 203 mm long and has ten print chips **27** (FIG. **13**), each typically 21 mm long. These print chips **27** are each disposed at a slight angle to the longitudinal axis of the printhead (see FIG. **12**), with a slight overlap between each print chip which enables continuous transmission of ink over the entire length of the array. Each print chip **27** is electronically connected to an end of one of the tape automated bond (TAB) films **28**, the other end of which is maintained in electrical contact with the undersurface of the printed circuit board **21** by means of a TAB film backing pad **29**.

The preferred print chip construction is as described in U.S. Pat. No. 6,044,646 by the present applicant. Each such print chip **27** is approximately 21 mm long, less than 1 mm wide and about 0.3 mm high, and has on its lower surface thousands of MEMS inkjet nozzles **30**, shown schematically in FIGS. **9**A and **9**B, arranged generally in six lines—one for each ink type to be applied. Each line of nozzles may follow a staggered pattern to allow closer dot spacing. Six corresponding lines of ink passages **31** extend through from the rear of the print chip to transport ink to the rear of each nozzle. To protect the delicate nozzles on the surface of the print chip each print chip has a nozzle guard **43**, best seen in FIG. **9**A, with microapertures **44** aligned with the nozzles **30**, so that the ink drops ejected at high speed from the nozzles pass through these microapertures to be deposited on the paper passing over the platen **14**.

Ink is delivered to the print chips via a distribution molding **35** and laminated stack **36** arrangement forming part of the printhead **11**. Ink from an ink cassette **93** (FIGS. **26** and **27**) is relayed via individual ink hoses **94** to individual ink inlet ports **34** integrally molded with a plastics duct cover **39** which forms a lid over the plastics distribution molding **35**. The distribution molding **35** includes six individual longitudinal ink ducts **40** and an air duct **41** which extend throughout the length of the array. Ink is transferred from the inlet ports **34** to respective ink ducts **40** via individual cross-flow ink channels **42**, as best seen with reference to FIG. **7**. It should be noted in this regard that although there are six ducts depicted, a different number of ducts might be provided. Six ducts are suitable for a printer capable of printing four color process (CMYK) as well as infra-red ink and fixative.

Air is delivered to the air duct **41** via an air inlet port **61**, to supply air to each print chip **27**, as described later with reference to FIGS. **6** to **8**, **20** and **21**.

Situated within a longitudinally extending stack recess **45** formed in the underside of distribution molding **35** are a number of laminated layers forming a laminated ink distribution stack **36**. The layers of the laminate are typically formed of micro-molded plastics material. The TAB film **28** extends from the undersurface of the printhead PCB **21**, around the rear of the distribution molding **35** to be received within a respective TAB film recess **46** (FIG. **21**), a number of which are situated along a chip housing layer **47** of the laminated stack **36**. The TAB film relays electrical signals from the printed circuit board **19** to individual print chips **27** supported by the laminated structure.

The distribution molding, laminated stack **36** and associated components are best described with reference to FIGS. **7** to **19**.

FIG. **10** depicts the distribution molding cover **39** formed as a plastics molding and including a number of positioning spigots **48** which serve to locate the upper printhead cover **49** thereon.

As shown in FIG. **7**, an ink transfer port **50** connects one of the ink ducts **40** (the fourth duct from the left) down to one of six lower ink ducts or transitional ducts **51** in the underside of the distribution molding. All of the ink ducts **40** have corresponding transfer ports **50** communicating with respective ones of the transitional ducts **51**. The transitional ducts **51** are parallel with each other but angled acutely with respect to the ink ducts **40** so as to line up with the rows of ink holes of the first layer **52** of the laminated stack **36** to be described below.

The first layer **52** incorporates twenty four individual ink holes **53** for each of ten print chips **27**. That is, where ten such print chips are provided, the first layer **52** includes two hundred and forty ink holes **53**. The first layer **52** also includes a row of air holes **54** alongside one longitudinal edge thereof.

The individual groups of twenty four ink holes **53** are formed generally in a rectangular array with aligned rows of ink holes. Each row of four ink holes is aligned with a transitional duct **51** and is parallel to a respective print chip.

The undersurface of the first layer **52** includes underside recesses **55**. Each recess **55** communicates with one of the ink holes of the two centre-most rows of four holes **53** (considered in the direction transversely across the layer **52**). That is, holes **53***a* (FIG. **13**) deliver ink to the right hand recess **55***a* shown in FIG. **14**, whereas the holes **53***b* deliver ink to the left most underside recesses **55***b* shown in FIG. **14**.

The second layer **56** includes a pair of slots **57**, each receiving ink from one of the underside recesses **55** of the first layer.

The second layer **56** also includes ink holes **53** which are aligned with the outer two sets of ink holes **53** of the first layer **52**. That is, ink passing through the outer sixteen ink

holes **53** of the first layer **52** for each print chip pass directly through corresponding holes **53** passing through the second layer **56**.

The underside of the second layer **56** has formed therein a number of transversely extending channels **58** to relay ink passing through ink holes **53***c* and **53***d* toward the centre. These channels extend to align with a pair of slots **59** formed through a third layer **60** of the laminate. It should be noted in this regard that the third layer **60** of the laminate includes four slots **59** corresponding with each print chip, with two inner slots being aligned with the pair of slots formed in the second layer **56** and outer slots between which the inner slots reside.

The third layer **60** also includes an array of air holes **54** aligned with the corresponding air hole arrays **54** provided in the first and second layers **52** and **56**.

The third layer **60** has only eight remaining ink holes **53** corresponding with each print chip. These outermost holes **53** are aligned with the outermost holes **53** provided in the first and second laminate layers. As shown in FIGS. **9**A and **9**B, the third layer **60** includes in its underside surface a transversely extending channel **61** corresponding to each hole **53**. These channels **61** deliver ink from the corresponding hole **53** to a position just outside the alignment of slots **59** therethrough.

As best seen in FIGS. **9**A and **9**B, the top three layers of the laminated stack **36** thus serve to direct the ink (shown by broken hatched lines in FIG. **9**B) from the more widely spaced ink ducts **40** of the distribution molding to slots aligned with the ink passages **31** through the upper surface of each print chip **27**.

As shown in FIG. **13**, which is a view from above the laminated stack, the slots **57** and **59** can in fact be comprised of discrete co-linear spaced slot segments.

The fourth layer **62** of the laminated stack **36** includes an array of ten chip-slots **65** each receiving the upper portion of a respective print chip **27**.

The fifth and final layer **64** also includes an array of chip-slots **65** which receive the chip and nozzle guard assembly **43**.

The TAB film **28** is sandwiched between the fourth and fifth layers **62** and **64**, one or both of which can be provided with recesses to accommodate the thickness of the TAB film.

The laminated stack is formed as a precision micro-molding, injection molded in an Acetal type material. It accommodates the array of print chips **27** with the TAB film already attached and mates with the cover molding **39** described earlier.

Rib details in the underside of the micro-molding provides support for the TAB film when they are bonded together. The TAB film forms the underside wall of the printhead module, as there is sufficient structural integrity between the pitch of the ribs to support a flexible film. The edges of the TAB film seal on the underside wall of the cover molding **39**. The chip is bonded onto one hundred micron wide ribs that run the length of the micro-molding, providing a final ink feed to the print nozzles.

The design of the micro-molding allow for a physical overlap of the print chips when they are butted in a line. Because the printhead chips now form a continuous strip with a generous tolerance, they can be adjusted digitally to produce a near perfect print pattern rather than relying on very close toleranced moldings and exotic materials to perform the same function. The pitch of the modules is typically 20.33 mm.

The individual layers of the laminated stack as well as the cover molding **39** and distribution molding can be glued or otherwise bonded together to provide a sealed unit. The ink paths can be sealed by a bonded transparent plastic film serving to indicate when inks are in the ink paths, so they can be fully capped off when the upper part of the adhesive film is folded over. Ink charging is then complete.

The four upper layers **52**, **56**, **60**, **62** of the laminated stack **36** have aligned air holes **54** which communicate with air passages **63** formed as channels formed in the bottom surface of the fourth layer **62**, as shown in FIGS. **9***b* and **13**. These passages provide pressurised air to the space between the print chip surface and the nozzle guard **43** whilst the printer is in operation. Air from this pressurised zone passes through the micro-apertures **44** in the nozzle guard, thus preventing the build-up of any dust or unwanted contaminants at those apertures. This supply of pressurised air can be turned off to prevent ink drying on the nozzle surfaces during periods of non-use of the printer, control of this air supply being by means of the air valve assembly shown in FIGS. **6** to **8**, **20** and **21**.

With reference to FIGS. **6** to **8**, within the air duct **41** of the printhead there is located an air valve molding **66** formed as a channel with a series of apertures **67** in its base. The spacing of these apertures corresponds to air passages **68** formed in the base of the air duct **41** (see FIG. **6**), the air valve molding being movable longitudinally within the air duct so that the apertures **67** can be brought into alignment with passages **68** to allow supply the pressurized air through the laminated stack to the cavity between the print chip and the nozzle guard, or moved out of alignment to close off the air supply. Compression springs **69** maintain a sealing inter-engagement of the bottom of the air valve molding **66** with the base of the air duct **41** to prevent leakage when the valve is closed.

The air valve molding **66** has a cam follower **70** extending from one end thereof, which engages an air valve cam surface **71** on an end cap **74** of the platen **14** so as to selectively move the air valve molding longitudinally within the air duct **41** according to the rotational positional of the multi-function platen **14**, which may be rotated between printing, capping and blotting positions depending on the operational status of the printer, as will be described below in more detail with reference to FIGS. **21** to **24**. When the platen **14** is in its rotational position for printing, the cam holds the air valve in its open position to supply air to the print chip surface, whereas when the platen is rotated to the non-printing position in which it caps off the micro-apertures of the nozzle guard, the cam moves the air valve molding to the valve closed position.

With reference to FIGS. **21** to **24**, the platen member **14** extends parallel to the printhead, supported by a rotary shaft **73** mounted in bearing molding **18** and rotatable by means of gear **79** (see FIG. **3**). The shaft is provided with a right hand end cap **74** and left hand end cap **75** at respective ends, having cams **76**, **77**.

The platen member **14** has a platen surface **78**, a capping portion **80** and an exposed blotting portion **81** extending along its length, each separated by 120°. During printing, the platen member is rotated so that the platen surface **78** is positioned opposite the printhead so that the platen surface acts as a support for that portion of the paper being printed at the time. When the printer is not in use, the platen member is rotated so that the capping portion **80** contacts the bottom of the printhead, sealing in a locus surrounding the microapertures **44**. This, in combination with the closure of the air valve by means of the air valve arrangement when the platen **14** is in its capping position, maintains a closed atmosphere at the print nozzle surface. This serves to reduce evaporation

of the ink solvent (usually water) and thus reduce drying of ink on the print nozzles while the printer is not in use.

The third function of the rotary platen member is as an ink blotter to receive ink from priming of the print nozzles at printer start up or maintenance operations of the printer. During this printer mode, the platen member **14** is rotated so that the exposed blotting portion **81** is located in the ink ejection path opposite the nozzle guard **43**. The exposed blotting portion **81** is an exposed part of a body of blotting material **82** inside the platen member **14**, so that the ink received on the exposed portion **81** is drawn into the body of the platen member.

Further details of the platen member construction may be seen from FIGS. **23** and **24**. The platen member consists generally of an extruded or molded hollow platen body **83** which forms the platen surface **78** and receives the shaped body of blotting material **82** of which a part projects through a longitudinal slot in the platen body to form the exposed blotting surface **81**. A flat portion **84** of the platen body **83** serves as a base for attachment of the capping member **80**, which consists of a capper housing **85**, a capper seal member **86** and a foam member **87** for contacting the nozzle guard **43**.

With reference again to FIG. **1**, each bearing molding **18** rides on a pair of vertical rails **101**. That is, the capping assembly is mounted to four vertical rails **101** enabling the assembly to move vertically. A spring **102** under either end of the capping assembly biases the assembly into a raised position, maintaining cams **76**,**77** in contact with the spacer projections **100**.

The printhead **11** is capped when not is use by the full-width capping member **80** using the elastomeric (or similar) seal **86**. In order to rotate the platen assembly **14**, the main roller drive motor is reversed. This brings a reversing gear into contact with the gear **79** on the end of the platen assembly and rotates it into one of its three functional positions, each separated by 120°.

The cams **76**, **77** on the platen end caps **74**, **75** co-operate with projections **100** on the respective printhead spacers **20** to control the spacing between the platen member and the printhead depending on the rotary position of the platen member. In this manner, the platen is moved away from the printhead during the transition between platen positions to provide sufficient clearance from the printhead and moved back to the appropriate distances for its respective paper support, capping and blotting functions.

In addition, the cam arrangement for the rotary platen provides a mechanism for fine adjustment of the distance between the platen surface and the printer nozzles by slight rotation of the platen **14**. This allows compensation of the nozzle-platen distance in response to the thickness of the paper or other material being printed, as detected by the optical paper thickness sensor arrangement illustrated in FIG. **25**.

The optical paper sensor includes an optical sensor **88** mounted on the lower surface of the PCB **21** and a sensor flag arrangement mounted on the arms **89** protruding from the distribution molding. The flag arrangement comprises a sensor flag member **90** mounted on a shaft **91** which is biased by torsion spring **92**. As paper enters the feed rollers, the lowermost portion of the flag member contacts the paper and rotates against the bias of the spring **92** by an amount dependent on the paper thickness. The optical sensor detects this movement of the flag member and the PCB responds to the detected paper thickness by causing compensatory rotation of the platen **14** to optimize the distance between the paper surface and the nozzles.

FIGS. **26** and **27** show attachment of the illustrated printhead assembly to a replaceable ink cassette **93**. Six different inks are supplied to the printhead through hoses **94** leading from an array of female ink valves **95** located inside the printer body. The replaceable cassette **93** containing a six compartment ink bladder and corresponding male valve array is inserted into the printer and mated to the valves **95**. The cassette also contains an air inlet **96** and air filter (not shown), and mates to the air intake connector **97** situated beside the ink valves, leading to the air pump **98** supplying filtered air to the printhead. A QA chip is included in the cassette. The QA chip meets with a contact **99** located between the ink valves **95** and air intake connector **96** in the printer as the cassette is inserted to provide communication to the QA chip connector **24** on the PCB.

The invention claimed is:

1. A method of distributing ink and air to an array of print chips in a printhead assembly, the method comprising:

supplying different inks from respective sources to a longitudinal distribution housing, the housing having a respective duct for each ink that extends longitudinally along the housing;

transferring ink from each respective duct to a laminated ink distribution structure fixed to the distribution housing, the ink distribution structure having the array of print chips positioned along a surface thereof such that the ink distribution structure supplies the different inks to the print chips that selectively eject the ink onto a sheet;

supplying air from an air source to an air duct extending longitudinally along the distribution housing; and,

transferring the air along the air duct to a space between the print chips and a nozzle guard, wherein the laminated ink distribution structure is comprised of laminated plastics layers.

2. A method according to claim **1**, wherein the method includes transferring the ink and air to the printhead substantially simultaneously.

3. A method according to claim **1**, wherein the method includes selectively controlling the supply of air to prevent ink drying on the nozzle guard.

4. A method according to claim **3**, wherein the method includes selectively stopping the supply of air during periods of non-use.

5. A method according to claim **1**, wherein the method includes supplying an air supply between the print chips and the nozzle guard by using aligned air holes provided by a plurality of laminated layers of the ink distribution system with air passages provided in an outer laminated layer of the ink distribution system.

6. A method according to claim **5**, wherein the method includes selectively supplying air to air holes to thereby transfer air to the printhead chips as required.

7. A method according to claim **1**, wherein the method includes selectively supplying different inks to ink holes in the laminated layers to thereby transfer the different inks to the printhead chips as required.

8. A method according to claim **1**, wherein the method includes supplying at least one of infra-red, and fixative inks from respective ink sources to the longitudinal distribution housing.

9. A method according to claim **1**, wherein the method includes transferring the ink from an ink cassette, such that the respective ink is relayed via individual ink hoses to the respective ducts.

10. A method according to claim **1**, wherein the method includes capping the printhead when not in use.

11. A method according to claim **10**, wherein the method includes stopping the supply of air to the printhead using an air valve, thereby to maintain a closed atmosphere at the printhead.

12. A method according to claim **10**, wherein the method includes capping to reduce both the evaporation and drying of ink solvent on a nozzle.

13. A method according to claim **10**, wherein the method includes rotating a platen member, including a capping portion, such that the capping portion contacts the bottom of the printhead, sealing a nozzle of the printhead.

14. A method according to claim **1**, wherein the method includes blotting a nozzle of the printhead during start up or maintenance operations.

15. A method according to claim **14**, wherein the method includes rotating a platen member, including a body and a blotting portion, such that the blotting portion is located opposite the nozzle guard to receive ink which is drawn into the body of the platen member.

* * * * *