Sept. 4, 1956 E. DACKOR 2,761,255

POLISHING MACHINE

Filed Oct. 2, 1953 8 Sheets-Sheet 1

Fig-1

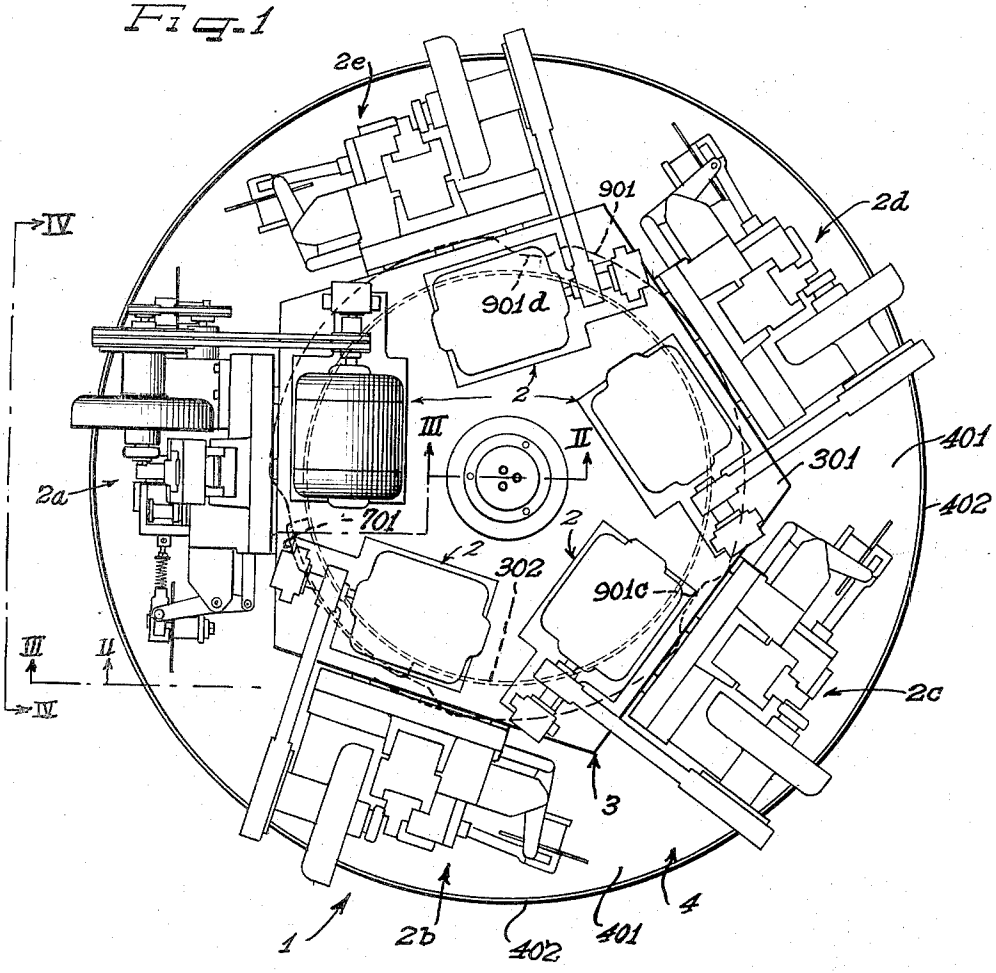

Inventor
EMIL DACKOR

by Hill, Sherman, Meroni, Gross & Simpson
Attys.

Sept. 4, 1956 E. DACKOR 2,761,255

POLISHING MACHINE

Filed Oct. 2, 1953 8 Sheets-Sheet 2

Fig. 2

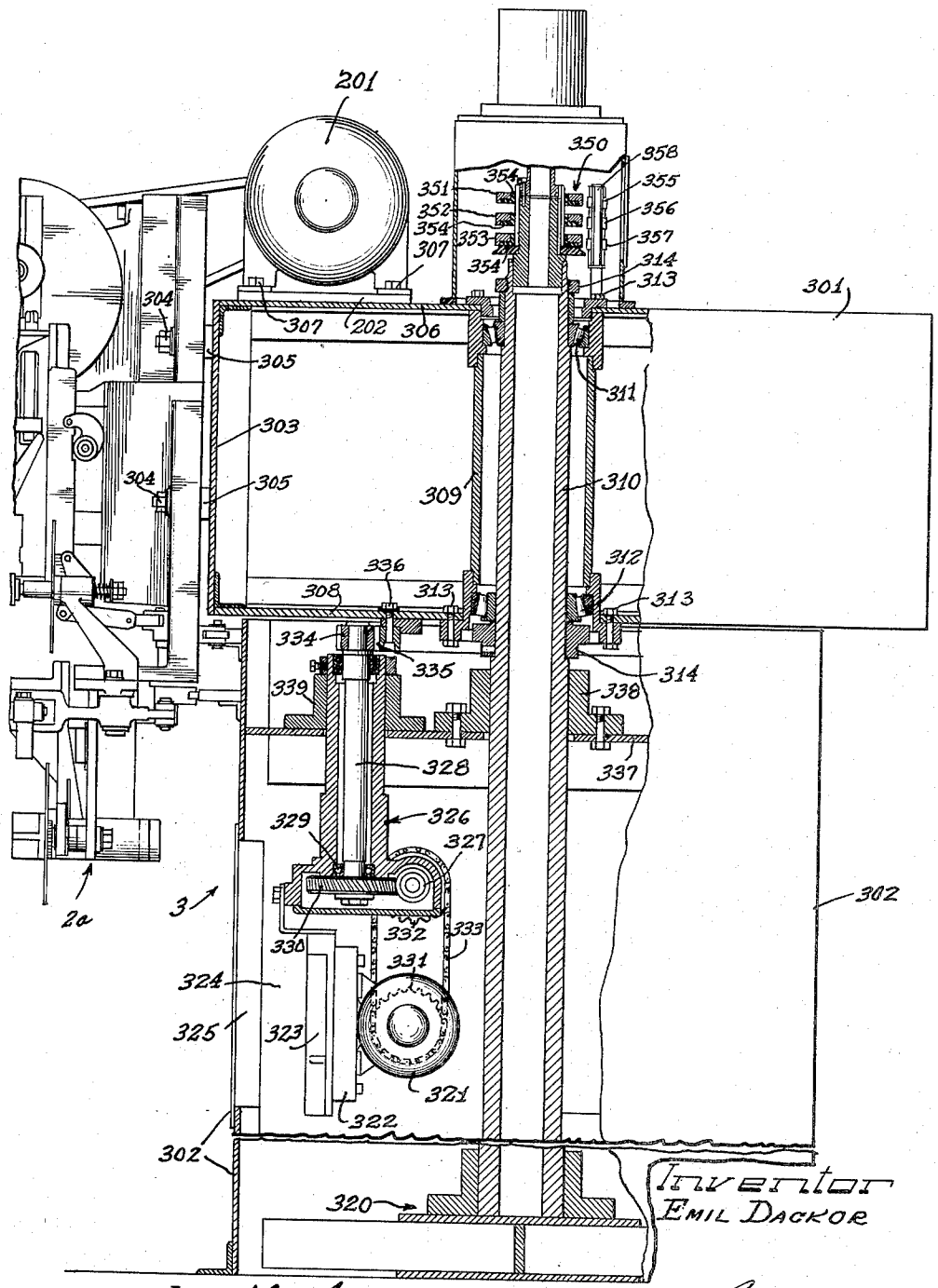

Sept. 4, 1956 E. DACKOR 2,761,255

POLISHING MACHINE

Filed Oct. 2, 1953 8 Sheets-Sheet 3

Fig. 3

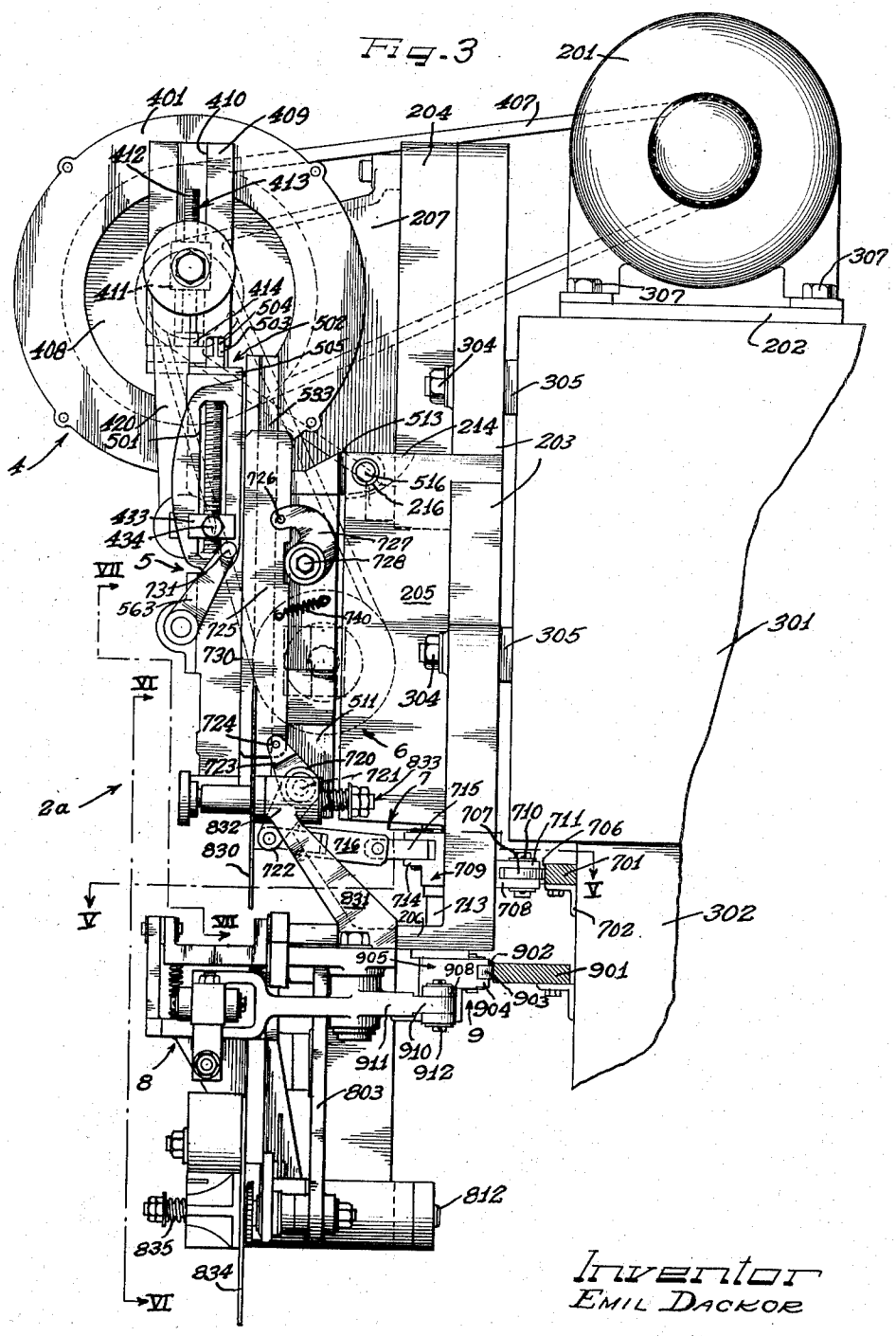

Inventor
EMIL DACKOR

by Hill, Sherman, Meroni, Gross & Simpson Attys.

Sept. 4, 1956 E. DACKOR 2,761,255

POLISHING MACHINE

Filed Oct. 2, 1953 8 Sheets-Sheet 4

Fig. 4

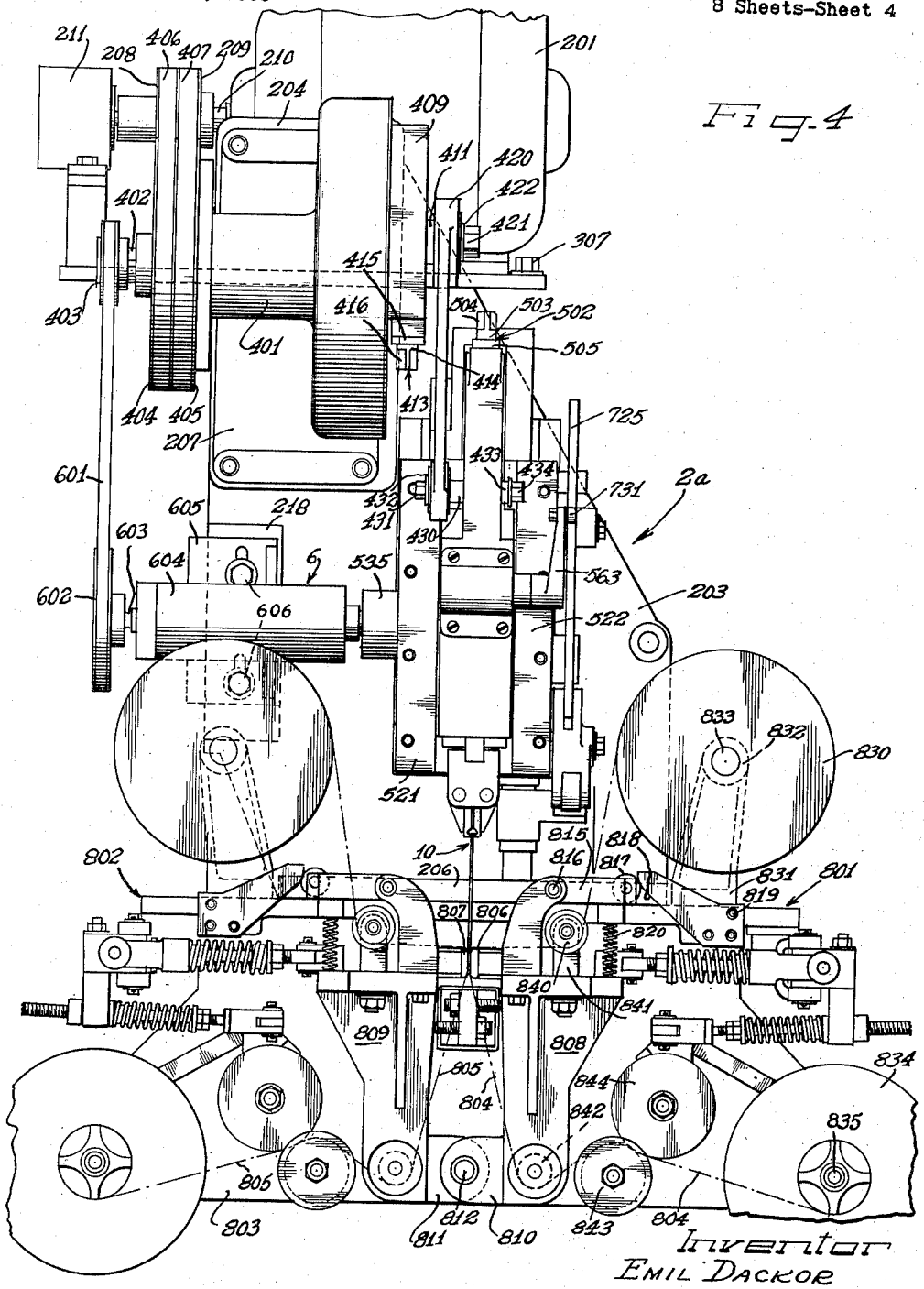

Inventor
EMIL DACKOR

by Hill, Sherman, Meroni, Gross & Simpson Attys.

Sept. 4, 1956

E. DACKOR

2,761,255

POLISHING MACHINE

Filed Oct. 2, 1953

8 Sheets-Sheet 5

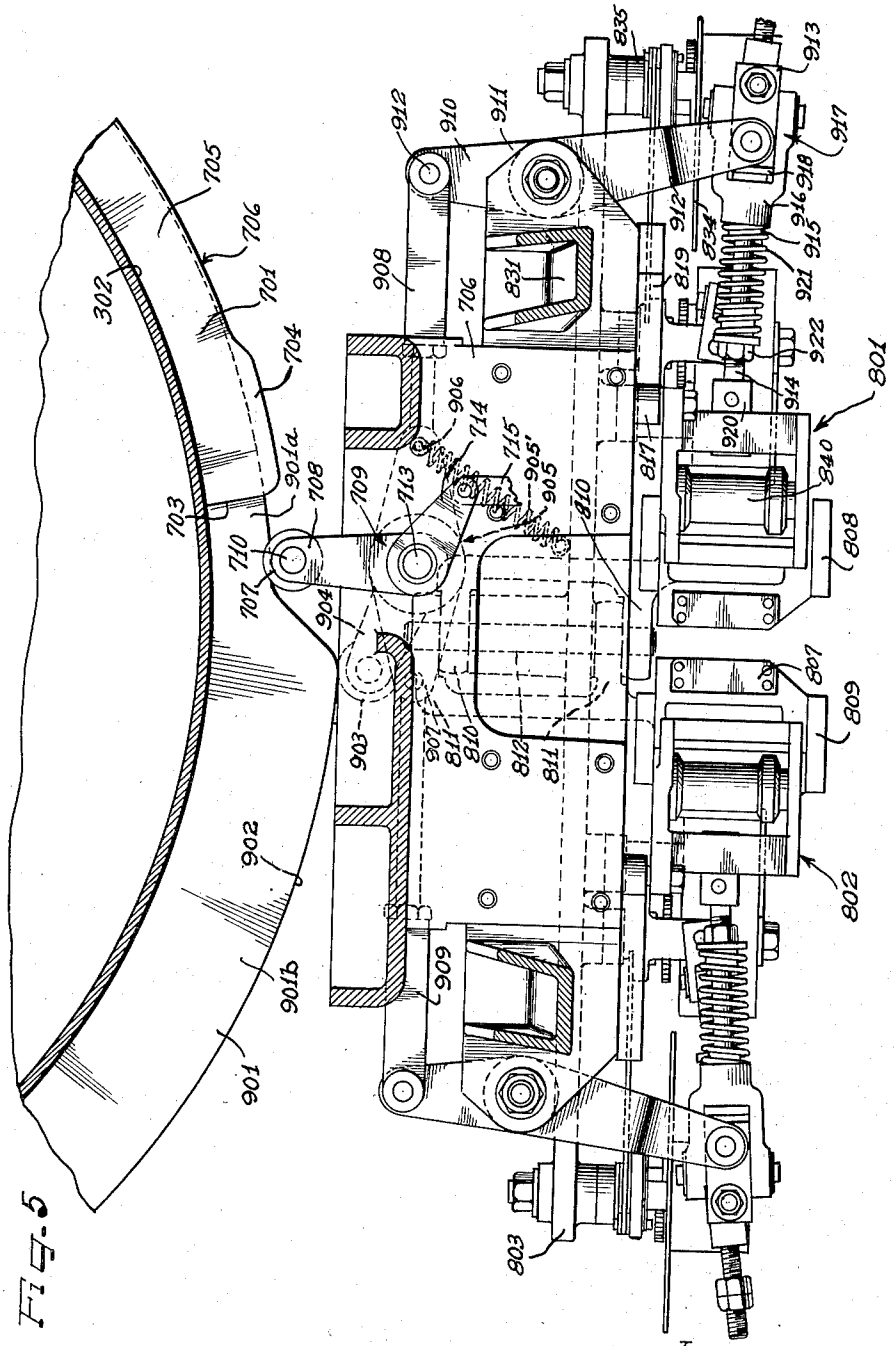

Fig. 5

Inventor
EMIL DACKOR

by Hill, Sherman, Meroni, Gross & Simpson
Attys.

Sept. 4, 1956

E. DACKOR

2,761,255

POLISHING MACHINE

Filed Oct. 2, 1953

8 Sheets-Sheet 6

Fig. 6

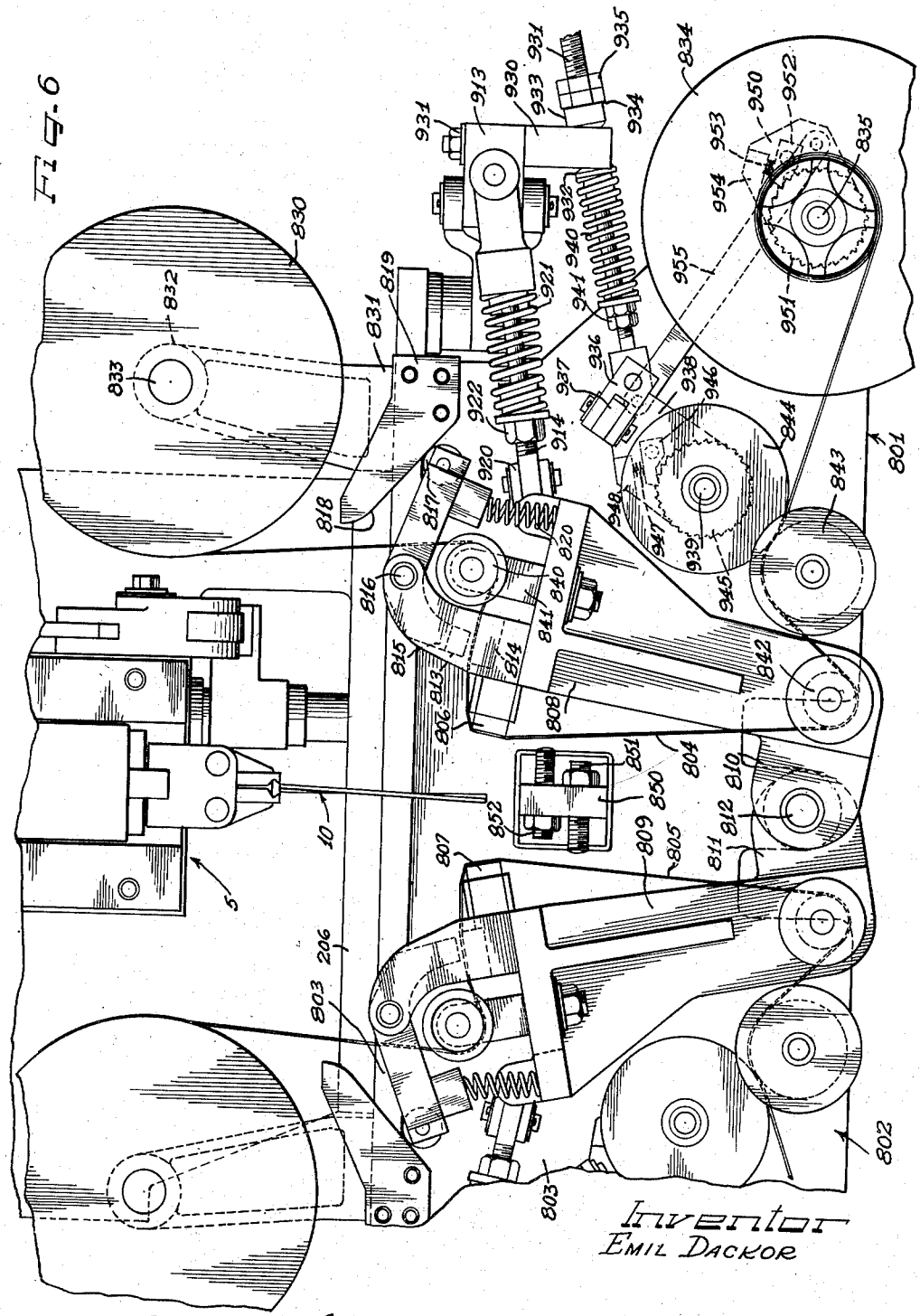

Inventor
EMIL DACKOR

by Hill, Sherman, Meroni, Gross & Simpson Attys.

Sept. 4, 1956 E. DACKOR 2,761,255

POLISHING MACHINE

Filed Oct. 2, 1953 8 Sheets-Sheet 7

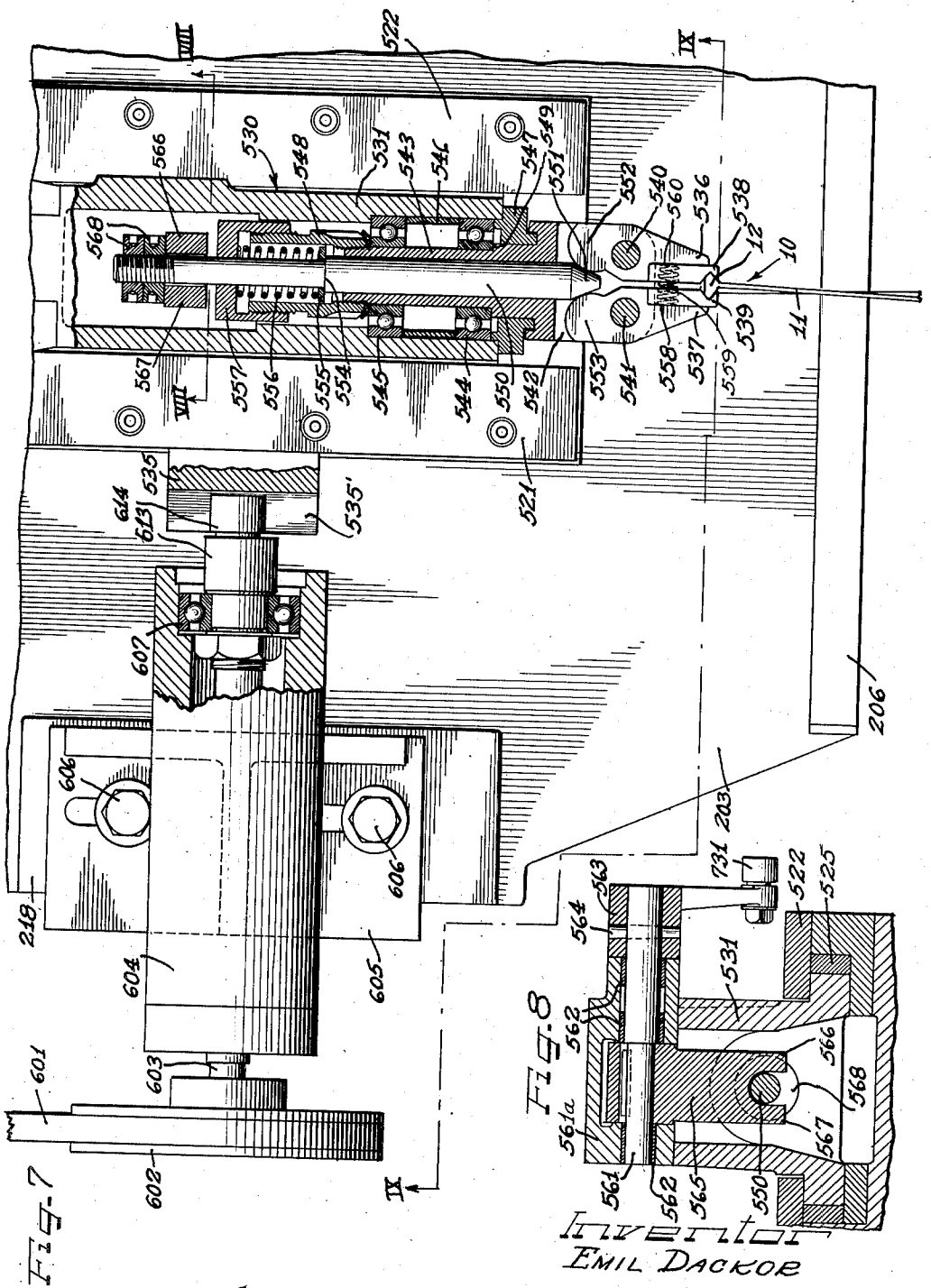

Fig. 7

Fig. 8

Inventor
EMIL DACKOR

by Hill, Sherman, Meroni, Gross & Simpson
Attys.

Sept. 4, 1956 E. DACKOR 2,761,255

POLISHING MACHINE

Filed Oct. 2, 1953 8 Sheets-Sheet 8

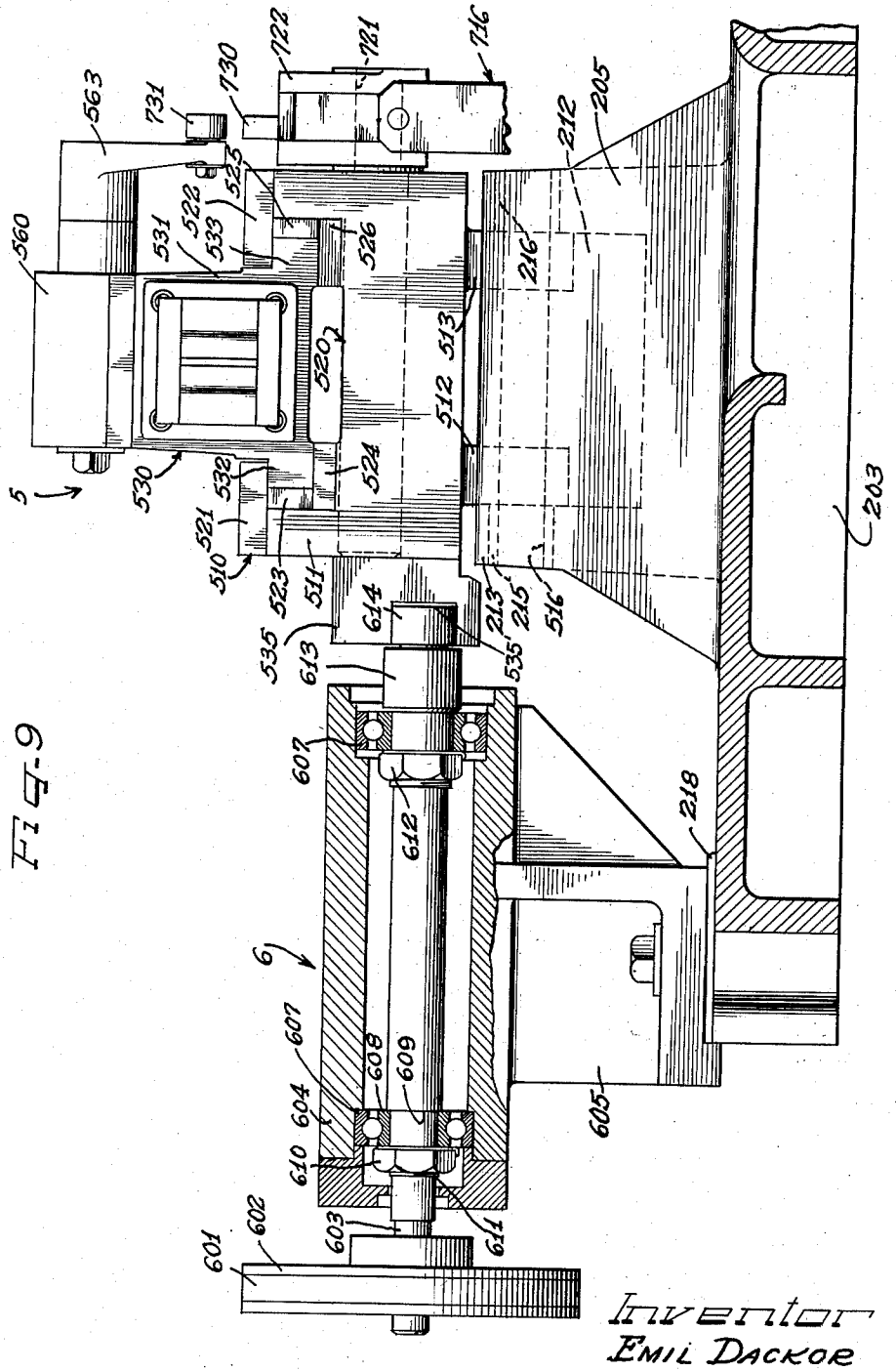

Fig-9

Inventor
EMIL DACKOR

by Kill, Sherman, Meroni, Gross & Simpson Attys.

United States Patent Office 2,761,255
Patented Sept. 4, 1956

2,761,255

POLISHING MACHINE

Emil Dackor, Euclid, Ohio, assignor to Thompson Products, Inc., Cleveland, Ohio, a corporation of Ohio

Application October 2, 1953, Serial No. 383,840

12 Claims. (Cl. 51—151)

The present invention relates to a polishing machine, and more particularly relates to a machine operable to efficiently, economically and rapidly polish a workpiece such as a turbine blade or bucket or vane or the like having oppositely disposed complex arcuate surfaces which may be of airfoil configuration or the like.

In detail, the present invention relates to a turret-type polishing mechanism of new and improved construction but in many respects similar to the polishing machine described and claimed in Patent No. 2,543,236, issued February 27, 1951, to myself, Edgar F. Nelboeck and Otto Thiel. The present invention is an improved machine incorporating many of the features of the system of the aforementioned patent.

According to the features of the present invention, a plurality of polishing units are mounted on a rotatable turret and each carries a separate workpiece for simultaneously polishing the surfaces of a plurality of workpieces. At an operator station which is a preselected position about the rotatable turret, a finished and polished workpiece is ejected or released from each successive polishing unit and a new workpiece to be polished is inserted into each successive unit for polishing.

Before the system of the above-mentioned patent was developed, polishing of such complex arcuate surfaces on oppositely disposed faces of a workpiece such as turbine blades, buckets or vanes was effected by hand polishing methods which necessarily involved long and tedious and expensive working and provided no assurance of uniformity of the finished workpieces. The system of the aforementioned patent resolved that difficulty and provided a machine readily operable to economically polish a multiplicity of workpieces simultaneously and uniformly. That machine also included a plurality of polishing units mounted on a turret-type rotary mechanism. The system of the present invention, however, provides an improved polishing system and mechanism over the system of the above-mentioned patent.

It is, therefore, an important feature of the present invention to provide a new and improved polishing machine.

It is another important feature of the present invention to provide a new and improved turret-type polishing machine wherein a number of workpieces such as turbine buckets or vanes or blades having oppositely disposed complex arcuate surfaces may be polished efficiently, economically and simultaneously.

Another object and feature of the present invention is to provide a polishing system for a workpiece such as a turbine blade wherein the workpiece is reciprocated and oscillated between a pair of relatively stationary polishing members by a workpiece holding member and operating device.

Still another object of the present invention is to provide a polishing mechanism of the horizontally rotatable turret-type wherein a number of polishing units are carried on a turret-type drive mechanism and carrying mechanism and wherein the drive mechanism and carrying mechanism is new and improved.

Still another object of the present invention is to provide a system of the class described with a new and improved power take-off system.

Still another object of the present invention is to provide a system of the class described wherein each polishing unit is provided with a pair of polishing belts each trained over a polishing pressure pad carried by an improved pad-carrying mechanism.

Still another object of the present invention is to provide each of the polishing units with a new and improved pad operator mechanism and a new and improved work clamping jaw operator mechanism.

Still another object of the present invention is to provide each of the polishing units with an improved independent jaw-operating mechanism and independent pad operator mechanism.

A still further object of the present invention is to provide each of the polishing units with a shock mounting operator system for each of the pad-carrying mechanisms.

A still further object of the present invention is to provide each of the polishing units with an improved polishing belt reeling mechanism.

Yet another object of the present invention is to provide each of the polishing units with a new and improved jaw release mechanism.

A still further object of the present invention is to provide a new and improved polishing belt locking mechanism.

Still another object of the present invention is to provide a new and improved work-holding ram operating mechanism for both reciprocating and oscillating the workpiece.

Still another object of the present invention is to provide a new and improved cam and cam follower system for operating a polishing machine of the class described in a new and improved manner.

Still other objects, features and advantages of the present invention will readily present themselves to those skilled in the art from the foregoing and from the following detailed description and from the accompanying sheets of drawings illustrating a preferred embodiment of the present invention and forming an integral part of this specification, in which like reference numerals refer to like parts, and in which:

Figure 1 is a top plan view, partially in diagrammatic illustration, illustrating a preferred embodiment of the present invention;

Figure 2 is a partial sectional view of the system of Figure 1 is taken along the line II—II of Figure 1;

Figure 3 is a side elevational view of a single polishing unit embodying the principles of the present invention as viewed along the line III—III of Figure 1;

Figure 4 is a front elevational view of a single polishing unit embodying the principles of the present invention as viewed along the line IV—IV of Figure 1;

Figure 5 is a top plan view, partially in section, of the cam and cam follower system and polishing pad carrying and operator mechanism as viewed along the line V—V of Figure 3;

Figure 6 is an enlarged front elevational view of the reeling mechanism and polishing pad operator mechanism taken along the line VI—VI of Figure 3;

Figure 7 is an enlarged front elevational view of the work-carrying ram and jaw and oscillator mechanism taken along the line VII—VII of Figure 3;

Figure 8 is a sectional view of a portion of the jaw release mechanism taken along the line VIII—VIII of Figure 7; and

Figure 9 is a bottom plan view of the jaw mechanism and workpiece holder oscillating mechanism of this embodiment of the present invention taken along the line IX—IX of Figure 7.

There is illustrated in Figure 1, partially in diagrammatic illustration, a top plan view of a machine, indicated generally at 1, embodying the principles of the present invention. The machine 1 is preferably a turret-type machine carrying a number of polishing units 2*a*, 2*b*, 2*c*, 2*d* and 2*e*. The number of these units on the machine 1 is not critical and may be as large a number as desired. The machine 1 of the present invention has been illustrated with five such units generally identified by the numeral 2, mounted on a pentagonal turret head 3 for substantially horizontal rotation about the center of the machine. The rotating head or turret table 3, of course, need not necessarily be pentagonal but it is preferred that the turret table 3 have a regular configuration which may be round or have any number of sides preferably corresponding to the number of polishing units such as the units 2*a*, 2*b*, 2*c*, 2*d* and 2*e* supported thereon and rotated thereby about the center of the polishing machine.

The turret mechanism 3 includes a turret table-type device 301 which is carried by a supporting unit 302 to rotate the polishing units about the center of the machine and over a preferably substantially circular coolant tank 4. The coolant tank 4, as illustrated, has a bottom wall 401 with an outside diameter sufficient to extend substantially to the radial extremity of the units 2 and there has an upturned flange or peripheral side wall 402. The tank structure 4 may, of course, have any desired configuration and construction but the above is preferred when employing a coolant with the system of this invention.

The turret mechanism 3 including the turret table structure 301 and the supporting structure 302 may be best understood by reference to Figure 2. As shown in this figure, the polishing unit 2*a*, along with the other polishing units which are not shown in this figure of the drawings, is supported by the side plate 303 of the rotary section 301 of the turret to which it is secured by any convenient means such as bolts or screws or studs 304. Stand-off spacers 305, which may be washers or the like, properly space the polishing units, such as the unit 2*a*, from the side walls of the rotary section 301 of the turret mechanism 3. Individual polishing unit drive motors 201 are secured through base plates or the like 202 to a turret table plate 306 by means of bolts or the like 307. The turret table plate 306 forms the upper face of the rotating section 301 of the turret mechanism 3 and is secured to the side walls 303 by any convenient means such as welding or bolting or riveting or the like, and in this preferred embodiment of the present invention, as illustrated in Figure 2, is secured to the side walls 303 and supported thereon through angle iron members or the like. The rotary turret table section 301 is also provided with a bottom plate 308 which is secured to the side wall members 303 in a like manner to the manner of securing the table plate 306 to the side walls 303.

In the geometric center of the turret assembly 3 and particularly through the rotary turret section 301, a space bounded by internal walls 309 is provided for a supporting column 310 which extends from the lower extremity of the base section 302 to the very top of the machine. This column 310 is preferably a hollow one and carries, through the interior thereof, numerous of the electrical power leads and control leads for the mechanism and system of the present invention. In addition, thrust-type roller bearing assemblies 311 and 312 are secured to the column 310 and the upper and lower turret table plates 306 and 308. The thrust bearing assemblies 311 and 312 are preferably roller-type bearings, as illustrated, but may be any other desired type of thrust bearing, and while they are preferably securely fixed to the upper and lower turret table plates 306 and 308 by machine screws or the like 313, the inner races of the thrust bearings are

adjustably secured to the hollow supporting column 310 in any convenient manner such as by positioning nuts or the like 314 threadably engaging the supporting column 310 and positioning the bearing assemblies 311 and 312.

The pedestal or base section 302 of the turret assembly includes an appropriate support 320 at the lower extremity thereof for the hollow supporting column 310. The pedestal or base section 302 also houses the rotary power mechanism for rotating the turret assembly about the center of the machine, about the supporting column 310 on the thrust bearings 311 and 312. The rotary power mechanism itself includes a convenient driving machine such as an electric motor 321 which is fixedly secured by a mounting base member or the like 322 to a cross frame 323 secured at its opposite ends to the side wall 324 which is reinforced by appropriate members 325.

Above the turret rotating drive motor 321 the supporting bracket 323 carries a journal assembly 326 housing a worm gear or the like 327 and a pinion shaft 328 mounted in appropriate bearings 329. In the region of its lower end, the pinion shaft 328 has an appropriate gear 330 secured thereto to mesh with the worm gear 327. The motor 321 and the worm 327 each carry sprocket wheels 331 and 332, respectively, which are appropriately interconnected by a sprocket chain 333. Rotational power produced at the motor 321, which is preferably an electric motor, imparts rotary motion to the worm gear 327 which in turn drives the gear 330 and the pinion shaft 328. At its upper end the pinion shaft 328 carries a pinion gear 334 which mates with a rim gear 335 or the like. This rim gear 335 is securely fastened to the lower turret plate 308 by any convenient means such as a bolt or machine screw or the like 336 and is concentric with the supporting shaft 310. Thus, rotatably driving the pinion shaft 328 rotates the pinion gear 334 and thereby drives the gear 335 and the rotary turret head 301, the rotary turret head 301 rotating about the supporting column 310 on bearings 311 and 312.

Additional supporting structure is provided within the pedestal 302 by a structural plate member 337 which is secured peripherally within the pedestal or base 302 and to the side wall structure 324 thereof carrying a bearing block 338 which supports the column 310 against distortion from the weight load thereon in compression. The structural plate 337 also carries an additional supporting element 339 which operates to support and position the journal housing 326 and thereby the pinion shaft 328.

In addition, the hollow supporting column 310, at its upper end, carries an electrical power take-off system 350 for selectively providing electrical power to the motors 201 of the polishing units 2. In high power electrical applications it is preferred to use three phase electric power brought into the system on three leads, not shown. Each of these leads would be brought through the hollow interior of the supporting column 310 and one affixed, electrically, to each slip ring or electrical power take-up ring 351, 352 and 353, which are otherwise insulated by ring insulator members 354 from the remainder of the system. A set of three brushes 355, 356 and 357 are supported on a contact-carrying post 358 which is secured to the upper turret table plate 306. The brushes 355, 356 and 357 are, of course, insulated from the carrying post 358.

Since each of the polishing units indicated generally by the numeral 2, is substantially identical to each of the other polishing units, it is necessary to describe only one of the same in detail. The polishing unit 2*a* will, therefore, be described in detail and this unit 2*a* is best viewed in full in Figures 3 and 4 of the drawings. As stated hereinabove, Figure 3 is a side elevational view of a single complete polishing unit, the unit 2*a*, and Figure 4 is a substantially full front elevational view of the same polishing unit, the unit 2*a*.

The principal operating portions of the polishing unit

2a are carried by a preferably vertically mounted frame or stand 203 which is secured to the turret wall 303 by the bolts or screws or studs 304 and spaced therefrom by the washers or the like 305, as described above. An upper pad member 204 supports a power driven ram reciprocating mechanism indicated generally at 4, while a lower pad member 205, on the main frame support 203 carries the work holding and ram mechanism indicated generally at 5. A ram oscillating mechanism, indicated generally at 6, is secured to the upstanding frame and support 203 below the power-driven ram reciprocating system 4 and laterally immediately adjacent to the work-holding mechanism 5 and the pad member 205.

In addition, the support member 203 has a lower outwardly extending flange 206 which operably supports a jaw release or work holder release operator mechanism 7, a polishing surface pad member carrying mechanism 8 and a pad member retracting operator mechanism 9.

A bracer and support member 207 (Figure 4) is secured to the forward face of the upper pad member 204 and carries a housing 401 for the power-driven reciprocator section for the polishing unit 2a. A shaft 402 is journaled in the housing 401 and in the region of one end thereof has a plurality of pulleys 403, 404 and 405 keyed thereon for rotation therewith, the rotating force to be transmitted to the shaft 402 by the pulleys 404 and 405. Each of the pulleys 404 and 405 are of substantially the same diameter and are coupled by belts or the like 406 and 407 to another pair of pulleys 208 and 209 which are to be driven by the polishing unit motor 201. This latter pair of pulleys 208 and 209 are preferably coupled to the output shaft 210 of the motor 201.

At the other end of the shaft 402 a crank disc 408 is keyed or otherwise secured thereto for rotation therewith. A crank way 409 is secured to the outer face of the crank disc 408 by any convenient attachment means such that a guide channel or track 410 running longitudinally of the crank way extends across the center of the crank disc 408 and radially outwardly therefrom predominantly in one direction. A cross head member 411 is flanged to track within the channel 410 of the guideway 409 and is longitudinally bored and threaded for locking acceptance of the threaded end 412 of a spindle indicated generally at 413. A pair of separated shoulder portions 414 facially engage opposite sides of the retainer and spacer block 415 in the region of the head 416 of the spindle 413. The spacer and retainer block 415 is fixedly secured in any convenient manner to the end of the crank way 409 nearest the center of the crank disc 408. The head end 416 of the crank spindle 413 is properly proportioned for manipulation by an appropriate tool for convenient rotation of the crank spindle 413 and thereby convenient increasing and/or decreasing of the spacing of the cross head 411 from the center of the crank disc 408 along the track channel 410 of the crank way 409.

A connecting rod 420 has one of its ends journaled on the cross head assembly 411 and retained thereon by a retainer screw such as a machine screw 421 having an enlarged head section or washer 422 at the head to retain the connecting rod 420 journaled onto an appropriately configurated portion of the cross head assembly 411. At its other end the elongated connecting rod 420 is journaled onto an appropriately configurated section of a second cross head 430 and retained thereon by a similarly appropriate retainer screw 431 and washer or the like 432.

This second cross head assembly 430 is provided with an end plate 433 secured to the opposite end thereof from the connecting rod 420 by any convenient means such as another machine screw or the like 434 and is thereby constructed to track in an elongated opening 501 in the upper portion of the front face of the work-holding assembly 5. A second spindle rod 502 threadedly engages the cross head 430 and is also provided with shoulder portions 503 at its head end 504 to facially engage a retainer plate 505

secured onto the upper end of the work-holding carriage assembly 5 immediately over the opening 501.

It will be appreciated that in this preferred embodiment of the present invention the upper end of the work-holding assembly 5 including the opening 501 and the associated cross head 430 and spindle member 502, etc. closely resemble the crank way 409 and its associated cross head 411, etc. and that these two assemblies are interconnected by the connecting rod 420 having an upper eye end journaled on the cross head 411 and a lower eye end journaled on the cross head 430. Through operation of this mechanism as the shaft 402 is rotated by the polishing unit motor 201, the work-holding assembly 5 is reciprocated, the amount of reciprocation, that is the amplitude of the reciprocation, is controlled by the position of the cross head 411 with respect to the center of the crank disc 408. This amplitude of reciprocation is adjustably controlled by the spindle 413. The vertical positioning of the work-holding assembly 5 may be adjusted also in a similar manner by rotatable manipulation of the spindle 502, the head end 504 of which is also properly configurated for acceptance of an appropriate tool.

The work-holding, clamping and release mechanism 5 which is in part reciprocated by the mechanism 4 immediately above described, is supported from the pad 205 for pivotal movement with respect thereto (Figures 3 and 9). A work holder track assembly 510 has a main track bed member 511 provided with a pair of rearwardly extending ears 512 and 513 or the like which are journaled on a pivot shaft or pin 516 which is mounted through a recess 212 in the pad block 205. The recess 212 extends less than the full distance between opposite sides of the block 205 thereby leaving pivot ears 213 and 214 thereon for acceptance of the pivot shaft 516. Sleeve members 215 and 216 are fitted into appropriate openings in the ears 213 and 214 and surround the shaft 516. The shaft 516 itself may be either secured to the pad 205 with the work holder release mechanism journaled thereon, or secured to the track assembly and journaled in the pad block ears 213 and 214 thus permitting pivotal movement of the work holder mechanism 5 with respect to the frame support about the axis of the pivot shaft 516 without opportunity for the shaft 516 to become displaced.

This pivotal arrangement for the work holder mechanism 5 is provided to permit oscillation of the unit by the oscillator mechanism 6 as described in detail below. Before examining the oscillator mechanism 6, however, detailed discussion of the work holder mechanism 5 will be substantially completed, at least with respect to the reciprocator mechanism 4.

The work holder track assembly 510 which is pivotally supported on the pivot shaft or pin 516 is principally constructed from the main track member 511. The main track member 511 is substantially channel-shaped having a central longitudinally extending channel 520 therein bounded on three sides by inner faces of the main track element 511. Buffer plates 521 and 522 are secured to the extreme front face of the main track element 511 and project a short distance laterally over the channel 520 thus providing a positive track channel in the track assembly 510. Bearing plates 523, 524, 525 and 526, which may be constructed of oilless bronze are secured to the main track member 511 and form a major portion of the raceway therein. The work-holding, clamping and release mechanism 5 also includes the work carriage indicated generally at 530. This carriage 530 is provided with a housing 531 having a flanged back face, including the laterally extending flanges 532 and 533 which track within the track bed assembly 510 and are reciprocable within the track bed as operated upon by the reciprocator mechanism 4.

As previously pointed out, the reciprocator mechanism 4 acts upon this carriage mechanism 530 through the system above described to reciprocate the carriage 530 in-

cluding the flanged housing 531 substantially vertically in the track assembly 510 therefor.

Also as stated, the work-holding assembly 5 is pivotally mounted to the frame pad 205 for oscillatory movement of the work holder in conjunction with and in cooperation with reciprocatory movement thereof. This oscillatory movement is provided to the work holder by an oscillator mechanism 6 which is best viewed in Figures 3, 4, 7 and 9. The reader's attention, however, is principally directed to Figures 7 and 9 for the best understanding of the oscillator mechanism 6.

A small pulley 403 (Figure 4) which is keyed to the shaft 402 drives a belt or the like 601 which in turn drives an oscillator mechanism drive pulley 602 keyed to an oscillator mechanism shaft 603. The oscillator mechanism shaft 603 is journaled in a journal housing 604 which is secured to a mounting bracket 605 that is adjustably mounted and secured to the main frame stand 203 preferably on a small pad 218 by any convenient securing means such as machine screws or bolts 606.

Within the journal housing 604 a pair of bearing members 607 of appropriate qualities such as frictionless bearings of the ball type or roller type are secured in place and rotatably support the oscillator mechanism shaft 603. The inner race 608 of one of the bearings 607 is seated against a shoulder portion 609 on the shaft 603 and held in place by a nut 610 threaded onto a small threaded section 611 of the shaft 603 having a smaller diameter than the principal remaining section of the shaft 603. At the other end of the shaft 603 it is still further enlarged and threaded to provide for seating of the inner race of the second bearing 607 and securing of the same to the shaft 603 by an appropriate nut 612. The end of the shaft 603 opposite to the end where the pulley 602 is keyed thereto is still further enlarged as at 613, or if it is found convenient an enlarging member such as the portion 613 may be secured to that end of the shaft 603, and outwardly therefrom there is carried a slightly eccentric portion 614 which may be either an eccentrically machined portion of the shaft 603 or a roller carried and journaled on an eccentrically machined portion of the shaft 603 or a roller carried on an eccentrically machined portion of the enlarging member 613 secured to the shaft 603 as desired or found convenient. In any event, the shaft 603 is provided at one end thereof, the end opposite to the pulley 602, with an eccentric member 614. The eccentricity of the member 614 need not be great and in a preferred embodiment of the present invention the eccentricity may be about $\frac{3}{32}$ of an inch more or less as found convenient. The important feature is that this slight eccentricity provides oscillatory movement to the workpiece to prevent surface polishing along a single path thereon, thus avoiding channeling or grooving due to grit or dirt or the like which may be present on the surfaces of the polishing belt. This subject matter will be further discussed in detail below.

An oscillator block 535 is secured to the side of the main track bed block 511 of the work holder assembly 5 immediately adjacent to the oscillator mechanism 6. This oscillator block 535 is provided with a channel 535' therethrough having a width about the same, or very slightly greater than the diameter of the eccentric roller or the like 614. The eccentric member 614 seats within the channel 535' and upon powered rotation of the shaft 603 horizontally oscillates the work holder assembly and mechanism 5 thereby pivoting the same about the pivot shaft 516. Vertical eccentricity of the member 614 is lost within the channel 535'.

From the above it will be understood that upon energization of the motor 201 and the magnetic clutch or the like 211, if the same is provided to the shaft 210 of the motor 201, the work holder mechanism carriage 530 will be reciprocated by the reciprocator mechanism 4 and the whole work holder assembly 5 will be oscillated by the oscillator mechanism 6 about the pivot pin or shaft 516.

The work holder carriage housing 531 is a substantially hollow member within which it carries a jaw mechanism as best viewed in detail in Figure 7.

A workpiece 10 such as a turbine blade or bucket or vane having a fluid guiding blade section 11 and a base 12 is held between a pair of arms or jaws 536 and 537 having jaw inserts 538 and 539, respectively. These jaws or arms 536 and 537 are journaled on bearings or the like 540 and 641, respectively, for clamping or releasing rotation of the jaws toward and away from each other at their jaw insert ends. The bearings 540 and 541 need be no more than pivot pins provided in a chuck bracket 542 at its lower extremity. The chuck bracket 542 includes a sleeve section 543 above the jaws 536 and 537 and is there journaled in bearings 544 and 545 the outer races of which are seated against the inner wall of the carriage housing 531 for rotatable mounting of the workpiece clamping jaws. The bearings 544 and 545 are firmly positioned by a bearing spacer 546 positioned therebetween, a bearing retainer ring 547 secured to the lower extremity of the carriage housing 531 and a sleeve member 548 threaded onto the upper end of chuck sleeve 543. A shoulder 549 of the chuck sleeve 543 rests against the lower side of the inner race of the bearings 544 also assisting in holding the bearings in proper position.

A pin or rod 550 is slidably fitted through the chuck sleeve 543 so that a lower tapered end 551 thereof is engageable with arcuate upper ends 552 and 553 of the jaw members 536 and 537, respectively, in camming relation. Immediately above the upper end of the chuck sleeve 543 the pin or rod 550 is provided with a shoulder 554 against which a washer or the like 555 rests. A compression spring or like biasing member 556 rests on the washer 555 and is retained in position about the rod 550 by a spring retaining cup 557 slipped over the upper end of the rod 550 and threaded onto the sleeve 548.

The spring 556 is thus operably disposed to continuously bias the pin or rod 550 in the direction of the jaw members 536 and 537 so that the tapered lower end 551 of the rod 550 is continuously biased against the camming upper ends 552 and 553 of the jaw members thereby biasing the jaw members 536 and 537 into a closed clamping locking relation with the base 12 of the workpiece 10. Raising of the pin 550 through operation of the jaw release operafor mechanism 7 operates to release the workpiece 10 from the jaw members 536 and 537 which are biased apart by a spring member or the like 558 seated in small recesses 559 and 560 in the jaw members 536 and 537 intermediately between the jaw inserts 538 and 539 and the pivot pins 540 and 541.

The work-holding mechanism and assembly 5, specifically, and the whole turret-type polishing machine 1, generally, is equipped with a jaw-release mechanism 7 for each of the polishing units. The jaw-release mechansm 7 for the polishing unit 2*a* is best illustrated, and may be best understood, in conjunction with Figures 3, 5, 7, 8 and 9. Before undertaking an understanding of the whole jaw-release mechanism and operator mechanism 7, however, the reader should first understand the operation of the portion of the jaw-release mechanism which forms a part of the work-holding carriage 530. This portion of the jaw-release mechanism is best viewed in Figures 7, 8 and 9.

A small journal box 561*a* is secured to the outer face of the carriage housing 531 and therein carries a jaw-release mechanism shaft 561 journaled in bearings 562 so that the shaft is disposed forwardly of the carriage housing 531 and transversely thereof. At one side of the carriage housing 531 and at one end of the shaft 561 a crank handle extending upwardly and rearwardly in the jaw-lock position is pinned or otherwise fixedly secured to the shaft 561 for positive rotation of the shaft with the crank handle 563. As illustrated in Figure 8 the crank handle 563 fits onto one end of the shaft 561 and is pinned into positive engagement therewith by a pin member 564.

Intermediate the ends of the shaft **561** a lever or the like **565** is keyed onto the shaft **561** for positive rotation therewith. This lever **565** has a bifurcated end portion including arms **566** and **567** which extend around the rod or pin **550** that cammingly serves to open or close the jaws **536** and **537** of the work-holding mechanism. At the upper end of the rod **550** rod-raising nut members **568** threadably engage the rod or pin **550** immediately above the area of the rod where the arms **566** and **567** of the bifurcated end portion of the lever **565** surround the rod. Thus, it may be seen that rotation of the shaft **561** by manipulation of the lever handle or crank handle **563** operates to push the rod upwardly thereby permitting opening of the jaws under the biasing force of the spring **558**, thereby releasing and/or ejecting the workpiece **10**. Rerotation of the shaft **561** returning the crank handle **563** to its normal position, returns the camming lever **565** to its normal position permitting closure and locking of the jaws **536** and **537** by action of the biasing spring **556** urging the rod or pin **550** downwardly against the arcuate cam ends **552** and **553** of the jaws **536** and **537**.

In accordance with the principles of the present invention, the polishing machine **1** is equipped to release the workpiece held by each of the polishing units **2***a*, **2***b*, **2***c*, **2***d* and **2***e* as each approaches an operator station which is a preselected position about the general periphery of the machine **1**. A preferred embodiment of this mechanism for automatically releasing or ejecting the workpiece is illustrated in conjunction with the polishing unit **2***a* in Figures 1, 3 and 5 and is indicated generally by the numeral **7**. A portion of the workpiece release operator mechanism **7** is duplicated on each of the polishing units of the machine **1** and another portion thereof is secured to the pedestal or base portion **302** of the turret mechanism **3**. Specifically, and as shown on the drawings, a workpiece release operator cam **701** is secured to the outer peripheral wall of the pedestal section **302** near the top thereof and in the vicinity of the operator station in any convenient manner such as by bolts or screws or the like affixing the same to an angle iron support or the like **702**. The cam **701** is so contoured as to have maximum radial extension in the vicinity of its leading edge **703** as it is approached by each polishing unit. Thereafter, for a short distance the cam **701** has a substantially constant radial extension as in the area **704** thereof after which the radial dimension diminishes a preselected amount for a substantially greater arc length as in the area **705** until the trailing edge of the cam **701** in the vicinity of the end of the operator station. This cam construction may be best observed in Figure 5 in elevation and in Figure 1 in invisible line illustration.

By this construction the cam **701** is provided with a camming face **706** which controls the operation of the work-release operator mechanism **7**. The cam face **706** is engaged by a roller **707** which is journaled between the arms of a first bifurcated end portion **708** of a substantially centrally journaled lever **709**. The lever **709** has an offset H shape as edge viewed (Figure 3) and the roller **707** is journaled on a pin or the like **710** between the arms **711** and **712** of the end **708** thereof. A control supporting post **713** is secured to the flange **206** of the support bracket **203** and carries the lever **709** in a journaled manner thereon.

The other bifurcated end **714** of a second arm of the lever **709** pivotally carries a link **715** which is coupled to a second substantially H-shaped lever **720** through a universal coupling unit **716**.

This second substantially H-shaped lever **720** is centrally journaled on a pin or shaft or the like **721** on the main track member **511** for substantially vertical plane pivotal movement. The universal coupling linkage **716** interconnects the lower bifurcated arm **722** of the lever **720** and the arm **714** of the lever **709** such that horizontal plane pivotal movement of the lever **709** on the post **713** imparts vertical plane pivotal movement to the lever **720**.

The upper bifurcated arm **723** of the lever **720** is pivotally pinned as at **724** to a work-release operator bar **725**. In the region of its opposite end from its connection with the lever **720**, the work-release operator bar **725** is pivotally pinned as at **726** to another lever **727** which is also journaled or pinned to the main track member **511** as at **728** for substantially vertical plane pivotal movement.

The levers **720** and **727** cooperate to support the release actuator bar **725** substantially vertically such that a leading face **730** thereof, the front edge of the bar **725**, lies in a substantially vertical line and in plane movement relation with a roller or the like **731** journaled in the free end of the work-release actuator handle or crank **563**.

This work-release operator mechanism (Figure 5) is so operative that engagement of the roller with the cam face **706** in the region **704** of the cam **701** pivots the lever **709** about the post **713** thereby pulling the lower end **722** of the lever **720** (Figure 3) rearwardly pivoting the same about the pivot **721** and moving the upper arm **723** of the lever **720** forwardly and downwardly. The lever **727** follows the movement of the upper arm **723** of the lever **720** through its positive linkage therewith via the bar **725** and the bar **725** is similarly moved forwardly and downwardly. The forward edge **730** of the bar **725** contacts the roller **731** (Figure 3) on the arm **563** and rollingly engages the same forcing the arm **563** to rotate about the axis of the shaft **561** (Figure 8), thereby rotating the shaft **561** and the lever **565**. As explained above, rotation of the shaft **561** moves the lever **565** to raise the pin **550** (Figure 7) thereby opening the jaws **536** and **537** under the force of jaw-opening biasing spring **558**, thus releasing and ejecting the workpiece **10**. As the roller **707** rides the camming face **706** of the cam **701** in the region **704** thereof the jaws **536** and **537** are opened to a maximum spacing therebetween thereby permitting the workpiece **10** to fall freely therefrom. The radial dimension of the region **704** may, of course, be so controlled that the workpiece **10** will merely be released but will not fall or be ejected by virtue of insufficient opening of the jaws **536** and **537** to permit such ejection. In this preferred embodiment of the present invention, however, the jaws **536** and **537** are opened to eject the workpiece **10** when the roller **707** rides the cam in the region **704** thereof.

As the polishing unit mechanism **2***a* continues in its movement about the machine **1** as driven by the turret mechanism **3**, the roller **707** leaves the region **704** of the cam **701** and moves into the region **705** of lesser radial extension thereby slightly retracting the release operator bar **725** and in turn slight retracting the release operator handle or crank **563** to move the jaws **536** and **537** slightly closer together. In this region of operation the jaws **536** and **537** are separated by a distance sufficient to permit free insertion or removal of a new workpiece **10**. The spacing between the jaws here is not sufficient to permit dropping or ejection of the workpiece **10** but is small enough to support the workpiece **10**.

Continued movement of the polishing unit mechanism **2***a* past the trailing edge of the cam **701** and out of the operator station releases the release operator mechanism from the cam **701** thereby retracting the release-operator bar **725** completely from the release handle or crank **563** thereby permitting the pin **550** to cammingly wedge between the upper ends of the jaws **536** and **537** thus clamping the workpiece **10** between the jaws. The bar **725** is retracted under a biasing force provided by any convenient means such as a biasing tension spring **740** hooked to the main track member **511** at one end and to the bar **725** at its other end.

As it was pointed out most briefly above, the work-holding mechanism **5** is arranged and positioned to hold the workpiece **10** between a pair of polishing surfaces presented to the workpiece on a polishing pad mechanism, etc. **8**. The polishing surface mechanism **8** forming a preferred embodiment of the present invention and operative in accordance with the principles thereof is illustrated

in and may be best understood in conjunction with Figures 3, 4, 5 and 6. The lower portion of Figure 3 illustrates the polishing surface mechanism 8 in side view, while the lower portion of Figure 4 illustrates the same in front view and Figure 5 is a top elevational view of a portion thereof. Figure 6 is an enlarged front elevational view of a portion of this mechanism.

The polishing surface mechanism 8 includes a pair of retractable, pivotally mounted, polishing head and reel mechanisms 801 and 802 which are substantially identical to each other and symmetrically arranged to each present a polishing surface to the workpiece 10. A carriage plate 803 secured to the flange portion 206 of the main support bracket 203 and extends substantially across the entire width of the polishing unit 2a supporting the several parts and elements of each of the halves 801 and 802 of the polishing surface mechanism 8.

The polishing surface provided on each of the mechanism sections 801 and 802 is provided by training a polishing belt, such as the belts 804 and 805 which may be sandpaper or sanding cloth or emery cloth or the like, over a polishing pad 806 and 807, respectively. The polishing pads 806 and 807 are preferably constructed from a resilient material such as a rubber-like material and are mounted on pad brackets 808 and 809, respectively, for pivotal movement toward and away from each other and the workpiece 10. For accomplishment of this pivotal movement the pad brackets 808 and 809 have pivot ears or eyelets 810 and 811, respectively, at their lower ends whereat they are journaled on a pin or shaft 812 which is positioned in line with the workpiece 10 and workholding mechanism 5 and secured to the polishing system carriage plate 803.

Since each of the polishing sections 801 and 802 are substantially identical in construction and symmetrically assembled, a description of one of the same, 801, will operate to describe both thereof. For simplicity of explanation and understanding only the polishing mechanism section 801 will be referred to for the following detail assembly description.

As stated, the pad bracket 808 carries the polishing pad 806 over which the polishing surface belt 804 is trained. The pad bracket 808 also carries a belt clamp 813 including a stationary lower jaw 814 and a retractable jaw 815. The retractable jaw 815 is formed as a bent lever-like construction pivoted substantially centrally on a pin 816 held in the upper reaches of the pad bracket 808. The end of the clamping lever 815 opposite to the actual clamping jaw end thereof carries a cam roller 817 journaled thereon to rollingly engage a polishing belt clamp-release cam surface 818 on a cam block 819 affixed in its position on the supporting structure. Biasing means such as the compression spring 820 biases the pivoted jaw arm into clamping relation over the lower jaw 814 and further biases the cam roller 817 into engagement with the camming surface 818 of the cam block 819.

The belt-clamping and cam arrangement is so constructed that when the polishing pad bracket 808 is retracted to the position seen therefor in Figure 6, the jaws are separated from each other and from the polishing belt 804 through action of the roller 817 riding on the camming surface 818. With the polishing pad bracket urging the belt 804 into polishing engagement with the workpiece 10, the polishing belt clamping mechanism 813 is substantially released from the cam block 819 permitting the spring or the like 820 to urge the jaws of the clamp into clamping relation. This latter position is seen in the general front assembly view of Figure 4.

The polishing belt 804 is supplied from a supply reel or the like 830 positioned over the cam block 819 and supported for unreeling rotation on a reel bracket 831 at an upper eye therein as at 832. In the assembly at the upper eye 832 of the reel-supporting bracket 831 the reel 830 is journaled for rotation and provided with a friction dragging brake assembly 833 adjustably controlling the drag on the reel 830 when the belt 804 is pulled therefrom through operation of the hereinafter described automatic belt polishing surface feed mechanism.

A take-up reel 834 is journaled in the carriage plate 803 somewhat below the supply reel 830 and behind the pad carriage bracket 808. The reel 834 is also supplied with a hub braking mechanism 835 which is adjustably controlled and prevents free rotation of the take-up reel 834.

The polishing belt 804 is supplied from the supply reel 830 with its polishing surface facing outwardly and is successively trained over a positioning roller 840 journaled on a small bracket or the like 841 immediately behind the polishing pad and belt-clamping jaws, between the belt-clamping jaws 814 and 815, over the polishing pad 806 which is resiliently urged outwardly, over a second positioning roller 842 journaled on the bracket 808 adjacent one of the pivot ears 810, between a pair of feed driving rollers 843 and 844 with the roller 844 controllably rotated by the belt feed mechanism and the roller 843 urging the belt 804 into close engagement with the roller 844 so that rotation of the roller 844 will operate to move the belt 804 longitudinally, and about the hub of the take-up reel 834.

Each of the polishing units, such as the unit 2a, is equipped with an automatic polishing pad and polishing surface retraction mechanism and polishing belt feed mechanism 9 which is operable to retract the polishing pads and pad mounting brackets and to feed a preselected increment of the polishing belt forwardly thereby releasing the workpiece from the polishing unit mechanism 8 and providing a new polishing surface on the belt over the polishing pad at the operator station and at other preselected positions about the periphery of this turret-type polishing machine 1. The pad-retractor and belt-feeding mechanism 9 is somewhat similar to the automatic workpiece release mechanism 7 in that it is provided with a cam 901, Figures 3 and 5, secured to the pedestal section 302 of the turret support and extending peripherally thereabout as seen in invisible line plan view in Figure 1. The outer peripheral surface 902 of the cam 901 is the camming surface controlling the operation of the retracting and belt feed mechanism 9 and is engaged by a roller or the like 903 journaled in an arm 904 of a three arm lever indicated generally at 905, Figures 3 and 5. The three arm lever 905 is centrally journaled on a pivot post which for convenience of construction may be a downward extension of the pivot post 713 of the jaw-release mechanism and operator mechanism 7.

The other two arms 906 and 907 of the three arm lever 905 are diametrically opposite in their extension from the hub center of the lever and are linked by adjustable links 908 and 909, respectively, to other levers in this retraction and belt-feed mechanism.

As was mentioned above, opposite halves 801 and 802 of the pad assembly and polishing surface belt mechanism were substantially identical and therefore only one half, the section 801, was described in detail in assembly. Similarly, the retraction and belt-feed operator mechanism 9 in addition to that part of the same which was described above, includes substantially identical sections one for each half 801 and 802 of the polishing pad and belt system. Therefore, for purposes of simplicity, only one half will be described, and that half will be in conjunction with the section 801 described in detail.

The link 908 pivoted for horizontal pivotal movement on the arm 906 of the three arm lever 905 is pinned at its other end to one arm 910 of a retraction lever 911 through a pin or the like 912, Figure 5.

The retraction lever 911 is journaled in the horizontal upper flange of the carriage plate 803 for substantially horizontal rotation and at the end of its other arm 912 pivotally carries a universal coupling block 913.

A retractor rod 914 is threadably connected or similarly

secured to an adapter-limiting plug **915** which passes through an opening in the bight section **916** of a forked swivel connector **917** pivotally pinned or the like to the universal coupling block **913** for limited pivotal movement between the ears on the arm **912** of the lever **911**. The forked coupling member **917** is mounted for substantially vertical pivotal movement about a substantially horizontal axis. The limiting member **915** is provided with a shoulder or the like **918** between the arms of the forked member **917** to seat against the bight section **916** when the fork member is pulled to a retracted position thereby to pull the retracting rod **914**.

At the other end of the retracting rod **914** it is pinned to a small pivot block **920** which is in turn pivotally pinned perpendicularly to the pad carriage **808**. A buffer spring **921** is carried on the retracting rod **914** between the forked connector member **917** and a spring compression adjusting nut **922** threaded onto the rod **914**.

The universal coupling block **913** also carries thereunder a feed rod block **930** which is secured thereto by any convenient means such as stud and bolt or machine screw or the like **931**. The block **930** has a passage therethrough, not shown, through which passes a belt feeder rod **931**. The passage through the block **930** is preferably substantially larger than the diameter of the rod **931** and is still further enlarged on opposite faces of the block **930** to seatingly accept substantially spherically faced abutment washers **932** and **933** on the rod **931**. The feeding rod **931** is also threaded for a substantial portion of its length and a pair of locking nuts **934** and **935** do threadably engage the same and adjustably retain the spherical faced washer **933** thereon. Behind the locking nuts **934** and **935** the threaded end of the rod **931** is substantially free; at its other end the rod **931** is pivotally connected to a pivot link **936** which is in turn perpendicularly pivotally connected by a pin or the like to an ear or the like **937** on a plate **938** which is journaled on the shaft **939** for the feed roller **844**. A buffer spring **940** is carried between the second substantially spherical faced seating washer **932** and adjusting nut **941** threaded onto the rod **931**.

The feed roller **844** has a serrated disc or wheel or ratchet wheel **945** secured thereto for rotation therewith. The teeth of this ratchet wheel **945** are engaged by a pivotally mounted spring biased pawl member **946** carried by the plate **938** and biased by a spring or the like **947** mounted between the pawl **946** and a spring backing member **948** mounted on the plate **938**.

A similar construction at the take-up reel **834** includes a plate **950** which is journaled about the axis of the reel **834** and a serrated disc or ratchet wheel **951** mounted for fixed rotation about the axis of the reel **834** together with the reel **834**. A pawl member **952** is pivotally secured to the plate **950** and is biased into engagement with the teeth of the ratchet wheel **951** by a spring or the like **953** which also engages a mounting block or similar device **954** secured to the plate **950**. A link **955** is pivotally engaged with the plate **938** at one end and the plate **950** at the other end.

As previously pointed out, the other section **802** of the polishing surface pad and reeling assembly is identically and oppositely equipped with these above-identified and described retracting and reeling members in proper association. With both of the sections **801** and **802** so equipped and constructed and linked together for equal and opposite retraction and belt-feeding through engagement with the cam **901** and travel thereacross. Automatic retraction pad members and automatic feeding of new increments of the polishing belt may be effected at the operator station and at other preselected positions about the periphery of this turret-type polishing machine.

The cam **901** with its camming face **902** is so shaped that as the polishing unit **2***a* approaches the operator station about the machine **1**, the roller **903** on the lever **905** encounters a region **901***a* of substantially reduced radial extension on the cam **901**. The cam roller **903** following the surface **902** of the cam **901** into the area **901***a* causes the lever **905** to rotate substantially horizontally about the axis of its supporting post, an extension of the post **713**, thereby pulling the links **908** and **909** inwardly towards the center of the polishing unit **2***a* under the force of bias spring **905'**.

While the cam roller **903** is riding on the cam **901** at the area thereof where it is of greatest radial extension, as at **901***b*, the polishing pads are positioned in their closed or actual polishing positions as viewed from the top in Figure 5 and from the front in Figure 4. When the cam roller **903** is riding on the face **902** of the cam in the region **901***a* thereof, the polishing pads are retracted to the position seen therefor in Figure 6; movement of the pads from the position of Figures 4 and 5 to the position of Figure 6 is effected when the cam roller passes from the area **901***b* to the area **901***a* and each section **801** and **802** operates precisely symmetrically so that only one of the same need be described for clarity.

Continuing now with the operation of this system, the link **908** having been drawn towards the center of the polishing unit **2***a* pivots the lever **911** so that the arm **912** thereof moves outwardly from the center of the polishing unit. The arm **912** of the lever **911** moving outwardly draws with it the retracting rod **914** and the belt feeding rod **931**. The polishing bracket and its associated parts are drawn backward or retracted with the retracting rod **914** and the cam roller **817** rolling on the camming surface or clamp-release cam surface **818** of the clamp release cam **819** opens the jaws **814** and **815** of the belt clamp **813**.

At the same time, while the belt feed rod **931** is drawn rearwardly, the plates **938** and **950** are rotated clockwise as viewed in Figure 6. Through this movement of the plates **938** and **950** the pawls **946** and **952** are also rotated in a clockwise direction as viewed in Figure 6 over several teeth of the ratchet wheels **945** and **951**.

Both of the sections **801** and **802** are at this time retracted from the workpiece **10** and both of the belts **804** and **805** are released from their associated clamps on the pad carriages **808** and **809**. At this time the feed mechanism is also cocked for feeding a new increment of the polishing belt to the polishing faces of the pads **806** and **807**. The belt is fed forwardly and the polishing pads are again urged into polishing engagement with the workpiece **10** as the unit **2***a* leaves the operator station. In the passage of the unit **2***a* through the operator station, the polished workpiece **10** is ejected from the clamping and work-holding mechanism **5** and a new workpiece is inserted therein as described above.

Now, as the unit **2***a* passes out of the operator station the cam roller **903** is again urged outwardly by an increase in the radial extension of the cam **901** (note invisible dotted line illustration of cam **901** in Figure 1) thereby urging the linkage to the position seen therefor in Figures 4 and 5. By effecting this closure of the pads and pad carriage mechanisms, the plates **938** and **950** are rotated counterclockwise, as viewed in Figure 6. The pawls **946** and **952** engaging the serrated ratchet plates **945** and **951** operate to also rotate those ratchets counterclockwise thus rotating belt-driving wheel **844** and take-up spool **834** in a counterclockwise direction pulling the belt **804** forwardly by a preselected increment from the supply reel **830**. The increment is preferably sufficient to present a whole new polishing surface over the face of the resilient pad **806**. At the same time that the pad carriages **808** and **809** are moved to their polishing positions the jaws **815** and **814** of the clamp **813** are closed under the force of the biasing member **820** and permitted to so close by the cam and roller group **819** and **817**.

To prevent the pads **806** and **807** from being forced into too tight an engagement with the workpiece **10**, adjustable stop means **850** is provided on the outer face of the main

carriage plate 803 between the carriages 808 and 809. The stop means 850 preferably carries a pair of adjustably threaded screw and nut combinations 851 and 852 positioned as shown in Figures 4 and 6 to butt against the facing edges of the carriages 808 and 809.

Adjustment of the stop means 850 may possibly require the carriages 808 and 809 to stop prior to completed radial outward movement of the roller 903 on the cam 901. The roller 903 is nevertheless permitted full movement since the rods 914 and 931 are loosely shock mounted through their appropriate brackets and continued outward movement of the roller 903 merely urges the block 930 to shock-absorbing engagement with the spring 940 and the forked member 916 into shock-absorbing engagement with the spring 921.

This spring-forcing means also assists in mantaining the polishing surfaces in resilient engagement with the faces of the workpiece 10, as the workpiece is reciprocated and oscillated as described above; and permits self-equalizing of the pressure of the belts and pads against the surfaces of the workpiece.

In order to insure proper high surface polished finishes to the workpiece 10 which may be a turbine blade or bucket or vane or the like having opposed complex arcuate surfaces, the polishing machine 1 is provided with means to feed new increments of the polishing belts to the polishing pads at preselected points along the periphery of the machine. Therefore, cam 901 is provided with additional area of reduced radial extension at spaced points therealong. The particular number of these areas is not critical, it is preferred that the cam 901 be provided with two such areas 901*c* and 901*d* of short arc length and of a radial dimension substantially identical to the radial dimension of the area 901*a*. Note Figure 1. As the polishing unit 2*a* approaches each of the areas 901*c* and 901*d* individually, the areas 901*c* and 901*d* being spaced apart a distance substantially equal to the distance that they are each spaced from the operator station, the belt-feeding and pad-retracting mechanism is operated quickly to retract the pads, feed the belt forwardly by a slight increment, and reclose the pads and the two polishing faces onto the workpiece 10 which may continue to reciprocate and oscillate or which may be stopped by actuation of the magnetic clutch or deenergization of the motor 201 as desired.

It should also be noted from Figures 1 and 5 that at the operator station the reduced radial extension area 901*a* of the cam 901 is of greater arc length than the arc length of the cam 701 for the work-release operator mechanism and extends in both directions, clockwise and counterclockwise from the end of the cam 701. This dimensioning of these cams is provided so that the workpiece polishing pads and polishing surfaces will be retracted from the workpiece prior to stoppage of movement and/or release of the workpiece by the workpiece release operator mechanism. In this manner and through combined reciprocation and oscillation of the workpiece, the workpiece is polished to a high surface finish without scratches, mars or flaws thereon.

From the above detailed description of the mechanical construction of this preferred system embodying the principles of the present invention and from the described detailed description of the operational characteristics of portions of the machine individually, it will be understood that the machine 1 for polishing turbine blades or other workpieces is operative to uniformly polish such workpieces rapidly and economically. As the turret of the machine rotates, the work-holding mechanism is reciprocated and oscillated thus reciprocating and oscillating the workpiece thereby avoiding travel of the workpiece through a single defined path. By such reciprocation and oscillation surface mars or scratches due to possible imperfections in the polishing surface itself, or from such other causes as dirt or grit or the like is avoided most efficiently. In addition, this turret-type machine is operative to advance new polishing surfaces to the workpiece for polishing the same at a number of points about the periphery of the machine, thereby further insuring high surface polishing.

Further, polishing machines embodying the principles of the present invention, such as the turret-type polishing machine 1, are operative to release and/or eject the workpiece at any preselected position above the periphery of the machine which position may be considered as a stop station or operator station for the machine. The particular work-holding and ejection mechanism is operative, as described, to eject the workpiece by opening the jaws the necessary spacing therefor and to thereafter close a sufficient distance to permit insertion of a new workpiece and hold the same and to still thereafter clamp the same. The polishing surfaces of this embodiment of the principles of the present invention are retracted from the workpiece before it is released and stopped and are closed upon the new workpiece after it has been clamped for polishing movement.

It will be understood from the foregoing that numerous modifications and variations may be made without departing from the true spirit and scope of the novel concepts of the present invention. I therefore do not wish to be limited to the precise construction shown and described but intend by the appended claims to claim all such modifications and variations as fall within the scope of my invention.

I claim as my invention:

1. A polishing machine comprising, a support mechanism, a rotatable member carried by said support mechanism, a plurality of polishing devices secured to said rotatable member and rotatable therewith, cam means secured to said support mechanism, a workpiece holder in each of said polishing devices, workpiece polishing means operably disposed to engage opposite faces of a workpiece held by said holder, means to retract said polishing means from a workpiece, means to release a workpiece from said holder, first cam follower means to actuate said retracting means independent of said release means, and second cam follower means to actuate said release means independent of said retracting means, said cam means and said first and second cam follower means cooperating to actuate said retracting means prior to actuation of said release means.

2. A polishing machine comprising, a support mechanism, a rotatable member carried by said support mechanism, a plurality of polishing devices secured to said rotatable member and rotatable therewith, cam means secured to said support mechanism, a workpiece holder in each of said polishing devices, mechanism to reciprocate said holder, mechanism to oscillate said holder, workpiece polishing means operably disposed to engage opposite faces of a workpiece held by said holder, means to retract said polishing means from a workpiece, means to release a workpiece from said holder, first cam follower means to actuate said retracting means independent of said release means, and second cam follower means to actuate said release means independent of said retracting means, said cam means and said first and second cam follower means cooperating to actuate said retracting means prior to actuation of said release means.

3. A polishing machine comprising, a support mechanism, a rotatable member carried by said support mechanism, a plurality of polishing devices secured to said rotatable member and rotatable therewith, cam means secured to said support mechanism, a workpiece holder in each of said polishing devices, a pair of resilient pad members, a separate polishing belt trained over each pad member to provide polishing surfaces contiguous with said pad members, a supply reel for each belt, a take-up reel for each belt, means to periodically advance said belts over said pad members by an increment sufficient to supply a fresh polishing surface thereover, means to retract said polishing surfaces away from a workpiece in

said holder, means to release a workpiece from said workpiece holder, first cam follower means to actuate said retracting means independent of said release means, and second cam follower means to actuate said release means independent of said retracting means, said cam means and said first and second cam follower means cooperating to actuate said retracting means prior to actuation of said release means.

4. A polishing machine comprising, a support mechanism, a rotatable member carried by said support mechanism, a plurality of polishing devices secured to said rotatable member and rotatable therewith, cam means secured to said support mechanism, a workpiece holder in each of said polishing devices, opposed resilient polishing pad members on opposite sides of said holder, a separate polishing belt trained over each pad member for presenting a pair of opposed polishing surfaces, a supply reel for each belt, a take up reel for each belt, means to periodically advance said belt including a ratchet and pawl assembly arranged to drive said take-up reel, means to retract said polishing surfaces from a workpiece carried by said holder, means to release a workpiece from said holder, first cam follower means to actuate said retracting means independent of said release means, and second cam follower means to actuate said release means independent of said retracting means, said cam means and said first and second cam follower means cooperating to actuate said retracting means prior to actuation of said release means.

5. A polishing mechanism for polishing opposed surfaces of a workpiece comprising, a workpiece carrying mechanism, means to simultaneously impart both reciprocatory motion and oscillatory motion to said carrying mechanism, resilient polishing pad member disposed on opposite sides of a workpiece in said carrying mechanism polishing belts trained over said pad members respectively for active polishing by the portions thereof contiguous with said pad members thereby forming polishing surfaces, and means to periodically advance said belts past said pad members by increments sufficient to position a new polishing portion of the belt thereover.

6. A polishing mechanism for polishing opposed surfaces of an elongated workpiece comprising, a workpiece carrying mechanism including a track member, a ram member slidably arranged and guided in the track member, mechanism to reciprocate said ram member in the track member, further mechanism to transversely oscillate said track member and said ram member, a pair of resilient polishing pad members, a polishing belt trained over each of said pad members for active polishing by the portion thereof contiguous with said pad members, a polishing belt supply reel, a polishing belt take up reel, and means to periodically advance said belts past said pad members by an increment sufficient to train a new polishing portion of said belt over said pad member, said means to periodically advance said belt including a ratchet and pawl assembly arranged to drive said take-up reel by a preselected increment.

7. In a polishing mechanism operable to polish oppositely disposed complex arcuate surfaces of a workpiece, in combination, a pair of oppositely disposed polishing belts, work-holder means having a releasable jaw mechanism arranged to position a workpiece between said polishing belts, mechanism to reciprocate said work-holder means, means to oscillate said work-holder means, a jaw release mechanism, a polishing belt retracting mechanism operable independently of said jaw release mechanism, and means to actuate said belt retracting mechanism prior to actuation of said jaw release mechanism to retract the polishing belts from the workpiece prior to release of a workpiece from the jaw mechanism.

8. In a polishing mechanism operable to polish oppositely disposed complex arcuate surface of a workpiece, in combination, a pair of oppositely disposed polishing belts, jaw mechanism arranged to position a workpiece between said polishing belts, mechanism to reciprocate said jaw mechanism, means to oscillate said jaw mechanism, a jaw release mechanism, a belt retracting mechanism operable independently of said jaw release mechanism, means to actuate said belt retracting mechanism prior to actuation of said jaw release mechanism to release a workpiece therefrom and to operate said jaw release mechanism to grip a workpiece prior to return of the retracting mechanism into position to engage the workpiece with the polishing belts.

9. A turret type polishing machine which comprises a rotatable support, a plurality of polishing units mounted circumferentially around said support, stationary cams disposed around said support, cam followers on each of said polishing units coacting with said cams, workpiece holders on each of said polishing units, a prime mover on each of said polishing units to actuate said holders, opposed polishing belts on each unit, means for pressing said belts against opposite faces of a workpiece carried by said holder on each unit, means for retracting said polishing belts from said workpiece, means for opening and closing said workpiece holder, and said cam followers coacting with said cams to control said means as the rotatable support advances the units around the cam.

10. An automatic polishing machine which comprises a rotatable support, a plurality of polishing units mounted circumferentially around said support, circumferential stationary cams around said support adjacent the polishing unit on the support, a workpiece holder on each unit, opposed polishing means on opposite sides of a workpiece held by said holder, means for opening and closing the holder, means for opening and closing the polishing means, and cam followers on said units coacting with said cams to control said opening and closing means at preselected positions around the work holder.

11. An automatic turret type polishing machine which comprises a carrier rotatable about a vertical axis, a plurality of polishing units mounted on said carrier circumferentially thereof, stationary cams disposed around said vertical axes adjacent said polishing units, each polishing unit having workpiece carrying jaws and opposed polishing belts for acting on opposite surfaces of a workpiece carried by said jaws, means for moving said belt toward and away from a workpiece carried by the jaws, cam follower means coacting with said cams as the units rotate around the vertical axis on the support for first retracting said polishing means, then advancing said polishing belts and thence closing said retracting means against the workpiece and additional cam follower means coacting with said cams for first opening the jaws to discharge a workpiece, thence partially closing said jaws to permit insertion of a new workpiece and thence completely closing said jaws to clamp the workpiece.

12. A polishing machine which comprises a rotatable support mechanism, a plurality of polishing units positioned circumferentially about said support mechanism and carried on said support mechanism, stationary cam means circumferentially fixed to said support mechanism, each of said polishing units including a pair of oppositely disposed polishing means, work holding means arranged to position a workpiece between said polishing means, a work holding release mechanism, means to retract said pair of oppositely disposed polishing means from the workpiece, a polishing surface on each of said oppositely disposed polishing means, means to renew said polishing surface, cam follower means coacting with said means to retract said polishing means and said cam means to retract said polishing means at preselected positions about said support mechanism and further cam follower means coacting with said cam means to coact with said means to renew said polishing surfaces at predetermined positions circumferentially about said support mechanism.

(References on following page)

References Cited in the file of this patent

UNITED STATES PATENTS

Re. 16,141	McDonough	Aug. 11, 1925
676,700	Roper	June 18, 1901
1,459,085	Black	June 19, 1923
1,490,631	Newkirk, et al.	Apr. 15, 1924
1,905,651	Raule	Apr. 25, 1933
2,082,020	Moon	June 1, 1937
2,123,171	Hamilton	July 12, 1938
2,261,902	Indge	Nov. 4, 1941
2,461,948	Whitehead	Feb. 15, 1949
2,543,236	Dackor et al.	Feb. 7, 1951