(No Model.)

H. ZEA.

SWIVEL.

No. 590,749. Patented Sept. 28, 1897.

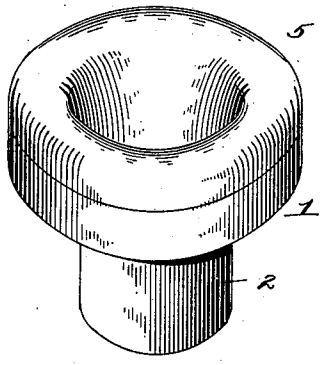

Fig. 1.

Fig. 2.

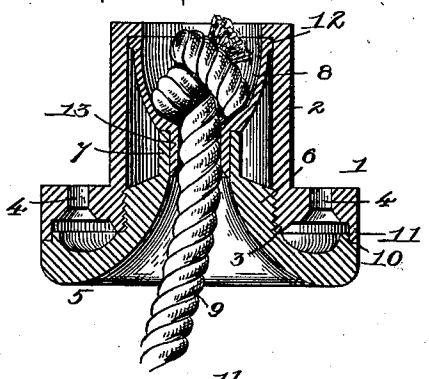

Fig. 3.

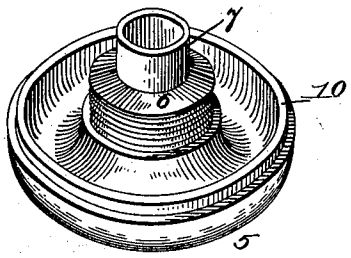

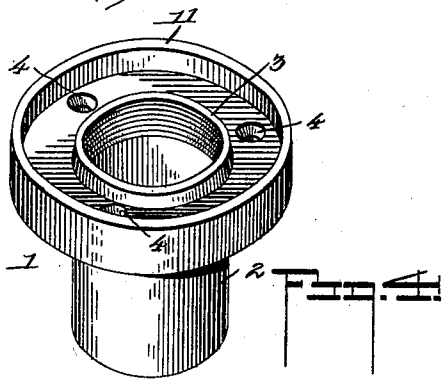

Fig. 4.

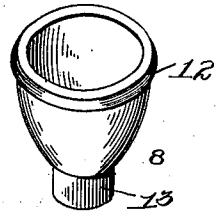

Fig. 5.

Inventor
Harlen Zea,

Witnesses
T. L. Mockabee
V. B. Hillyard.

By Pjs. Attorneys.
C. A. Snow & Co.

THE NORRIS PETERS CO., PHOTO-LITHO., WASHINGTON, D. C.

UNITED STATES PATENT OFFICE.

HARLEN ZEA, OF MILWAUKEE, WISCONSIN.

SWIVEL.

SPECIFICATION forming part of Letters Patent No. 590,749, dated September 28, 1897.

Application filed August 8, 1896. Serial No. 602,139. (No model.)

To all whom it may concern:

Be it known that I, HARLEN ZEA, a citizen of the United States, residing at Milwaukee, in the county of Milwaukee and State of Wisconsin, have invented a new and useful Swivel, of which the following is a specification.

This invention relates to means for suspending punching-bags generally resorted to in physical training and exercises for developing the muscles and organs of the body. The swivel connection may be used with advantage wherever a rope, cord, or line is to be coupled by means of a universal joint to a fixed part.

The invention is of especial advantage for the purpose designed, as it enables the punching-bag to return quickly when recovering from the effect of a blow, obviates wabbling, which is the source of the greater part of the annoyance experienced by persons using the punching-bag, prevents cutting and wearing away of the rope, and is responsive to any torsion of the rope, is neat in appearance, durable, and effective for attaining the objects in view.

For a full understanding of the merits and advantages of the invention reference is to be had to the accompanying drawings and the following description.

The improvement is susceptible of various changes in the form, proportion, and the minor details of construction without departing from the principle or sacrificing any of the advantages thereof, and to a full disclosure of the invention an adaptation thereof is shown in the accompanying drawings, in which—

Figure 1 is a perspective view of the swivel. Fig. 2 is a vertical section thereof, showing a rope in position. Fig. 3 is a detail view of the base. Fig. 4 is a detail view of the bell-mouthed cap. Fig. 5 is a detail view of the cup.

Corresponding and like parts are referred to in the following description and indicated in the several views of the drawings by the same reference-characters.

The base 1 may have any desired form and, as shown, is of circular outline, and is provided with a tubular extension 2, having an inner flange 3 at its outer end, and which is threaded internally at the end adjacent to the base. The base is formed with a series of openings 4, which receive screws or like fastenings for attaching the swivel to a ceiling, beam, or other fixed support, the tubular extension 2 entering a bore or opening provided in the support for its reception. The base appears as an annulus and is flanged at its inner and outer edges, the openings 4 being located between the said flanges.

The cap 5 is of corresponding shape to the base and is centrally apertured and flares outwardly from the central opening, forming a bell-mouth. A boss 6 is formed on the rear face of the cap and is exteriorly threaded to make screw-thread connection with the inner end of the tubular entension 2, thereby securing the cap and base together. A nipple 7 is formed with the boss 6 and provides a support for the cup 8, which receives the knotted end of the rope, cord, or line 9. An annular rim 10 projects from the rear face of the bell-mouthed cap and is adapted to enter the outer flange 11 of the base 1, so as to provide a snug and tight joint between the cap and base. The rim 10, in conjunction with the flange 11, receives the lateral thrust incident to the swinging of the punching-bag, thereby preventing the loosening of the screw-thread connection between the cap and base.

The cup 8 has an outer bead 12 at its open end and which engages with the inner wall of the tubular extension 2, thereby centralizing the cup and preventing any lost motion thereof within the part 2. A thimble 13, at the inner end of the cup and projecting therefrom, fits comfortably within the nipple 7 and acts jointly with the bead 12 to prevent any wabbling of the cup when the swivel is in operation. The inner flange 3 prevents outward displacement of the cup and retains the latter in place within the tubular extension 2.

To apply the swivel, the cap is disconnected from the base and the support to which the base is to be attached is provided with a mortise or bore to receive the tubular extension 2, after which the base is placed against the support and secured thereto by passing screws, nails, or like fastenings through the openings 4. The cord or line 9 is passed through the central opening of the bell-

mouthed cap and through the cup, and its projecting end is knotted and the rope drawn back so as to seat the knot within the cup, after which the cap is secured to the base in the manner set forth. The fastenings employed for attaching the base to its support are concealed by the cap, thereby giving to the device a neat and attractive appearance. By reason of the peculiar disposition of the parts the cup will turn when the rope is subjected to any torsion, thereby preventing the twisting and wabbling of the punching-bag. The flaring of the mouth prevents any appreciable wear or cutting of the rope and results materially in quickly returning the punching-bag after a blow has been delivered thereon.

Having thus described the invention, what is claimed as new is—

1. In a swivel, the combination of a cap having a central opening, and having the walls of the opening flaring outwardly, forming a bell-mouth, and a cup rotatably fitted to the smaller or inner end of the cap and adapted to receive the knotted end of a rope or line, substantially as described for the purpose specified.

2. In a swivel, the combination of a base, a cap adapted to be positively secured to the base and having a bell-mouth, and a cup supported by the cap and adapted to receive the knotted end of a rope or line, substantially as and for the purpose specified.

3. In a swivel, the combination of a base having a flange, a bell-mouthed cap having a rim to form a snug joint with the flange of the base, means for connecting the cap to the base, and a cup supported by the cap and adapted to turn freely thereon and receive the knotted end of a rope or line, substantially as set forth.

4. In a swivel, the combination of a base having a tubular extension, a bell-mouthed cap-adapted to be secured to the base, and a cup located within the tubular extension of the base and supported by the cap, substantially as set forth.

5. In a swivel, the combination of a base having a tubular extension provided at its outer end with an inner flange, a bell-mouthed cap constructed to be secured to the base, and a cup having an outer bead and located within the tubular extension and held therein by the inner flange, and supported by the cap and adapted to turn freely thereon, substantially as set forth.

6. The herein-described swivel, comprising a base having a series of openings, inner and outer flanges, and a tubular extension formed with an inner flange, a bell-mouthed cap having a rim to form a snug joint with the outer flange of the base, and having a boss forming a screw-thread connection with the tubular extension of the base, and having a nipple, and a cup having an outer bead and a thimble, the latter snugly fitting within the nipple of the cap and located within the tubular extension of the base, substantially as shown for the purpose described.

In testimony that I claim the foregoing as my own I have hereto affixed my signature in the presence of two witnesses.

HARLEN ZEA.

Witnesses:
HENRY W. GETZLOFF,
A. R. BRIGHT.