Dec. 12, 1939. G. F. SCRIVEN 2,183,410

BEDTRAY AND BEDSIDE TABLE

Filed Sept. 24, 1938 2 Sheets-Sheet 1

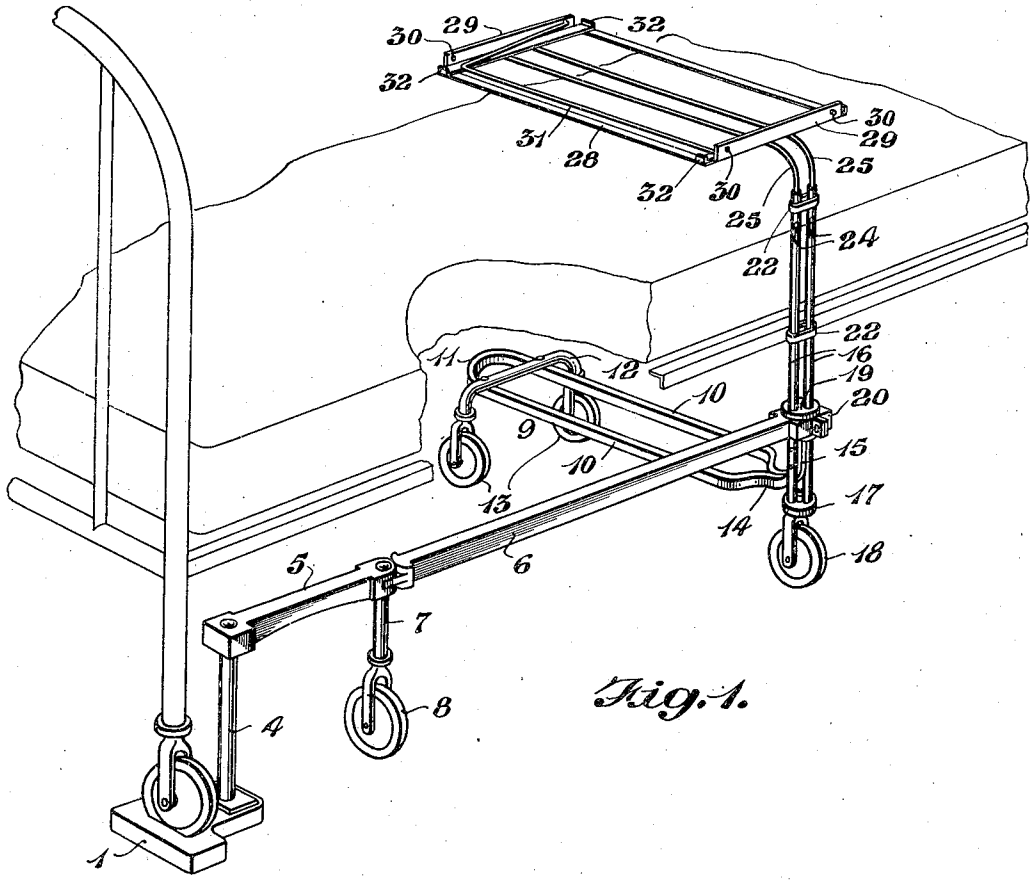

Fig. 1.

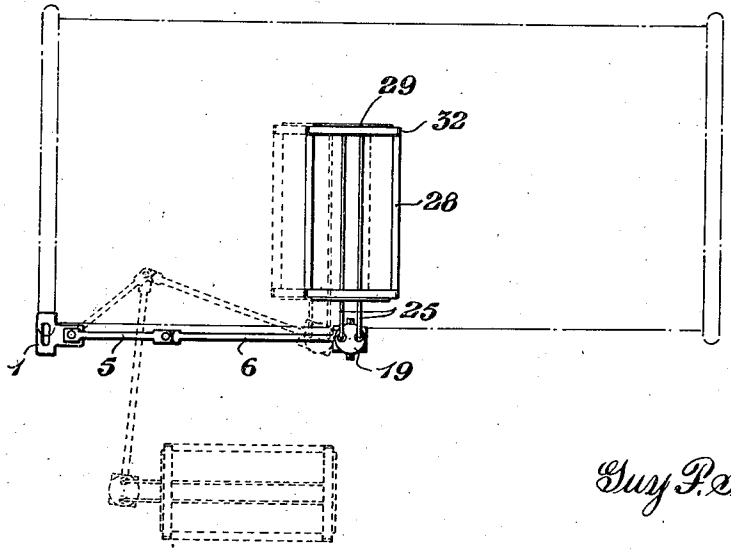

Fig. 2.

Inventor
Guy F. Scriven,

By Albert G. Freeman

Attorney

Dec. 12, 1939. G. F. SCRIVEN 2,183,410

BEDTRAY AND BEDSIDE TABLE

Filed Sept. 24, 1938 2 Sheets-Sheet 2

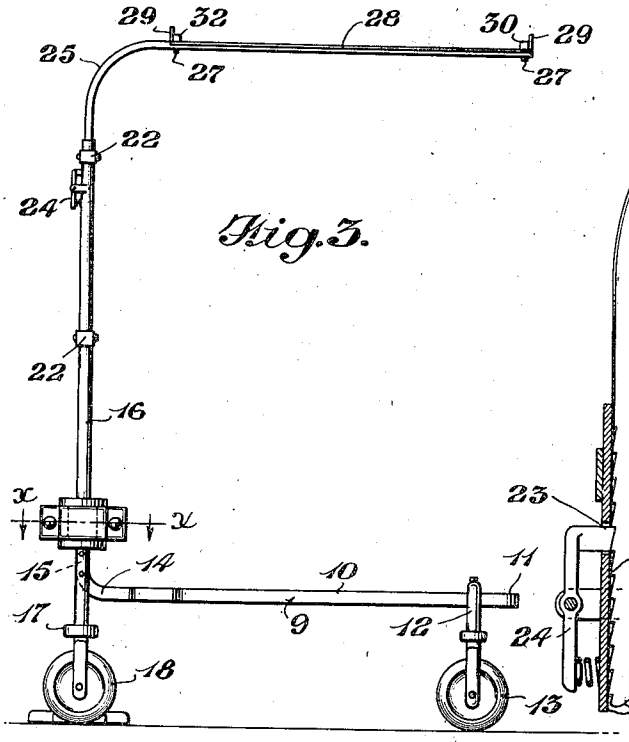

Fig. 3.

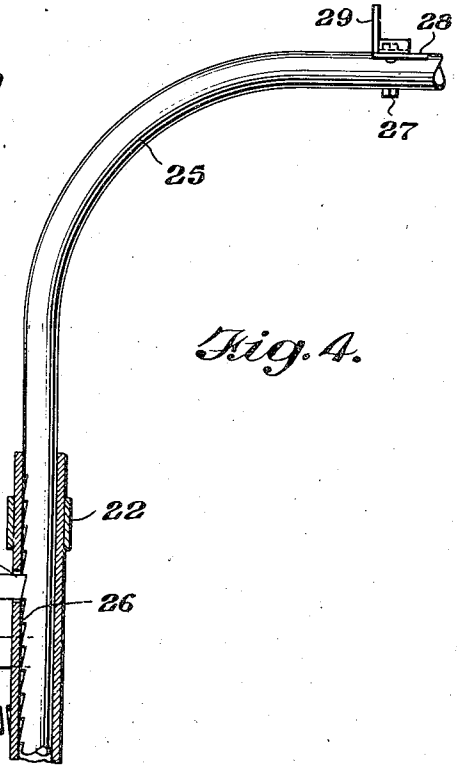

Fig. 4.

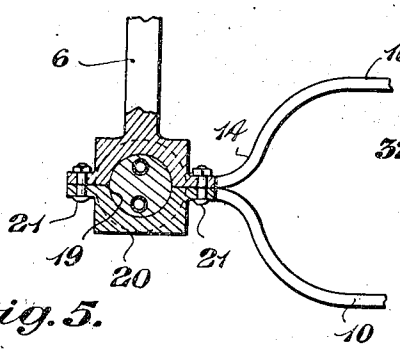

Fig. 5.

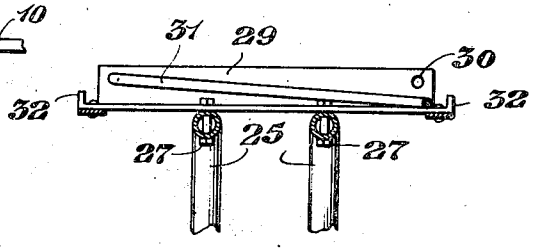

Fig. 6.

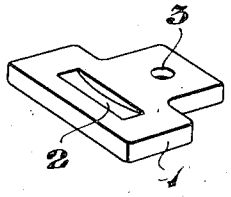

Fig. 7.

Inventor

Guy F. Scriven,

By Albert Phillips Freeman

Attorney

Patented Dec. 12, 1939 2,183,410

UNITED STATES PATENT OFFICE

2,183,410

BEDTRAY AND BEDSIDE TABLE

Guy F. Scriven, Sioux Falls, S. Dak.

Application September 24, 1938, Serial No. 231,603

3 Claims. (Cl. 45—60)

This invention relates to a bedtray and bedside table, and pertains more particularly to a device for use by invalids or convalescents, although the same is not restricted to such use.

Heretofore, serious injuries have resulted from the use of bedtrays at present on the market, due to tilting or upsetting thereof, with consequent spilling of hot liquids or other articles upon the user when the same is accidently struck during turning or other movements.

In order to overcome the foregoing and other objections, it is the primary object of this invention to provide a device of the above character which is substantially rigid in use and which may be readily maintained in operative position.

Another important object of this invention is to provide a device of the above character which is maintained in position by the weight of the bed with which same is used.

Another important object of this invention is to provide a device of the above character which is readily and quickly adjusted to its operative or inoperative position with respect to the user.

Another important object of this invention is to provide a device of the above character which is readily and quickly adjusted to a position for use as a bedtray or support or to a position as a bedside table without altering its construction or interchanging the parts thereof.

Still another important object of this invention is to provide a device of the above character which is of simple construction, readily manufactured, and one which may be placed upon the market at a reasonable cost.

The foregoing and other objects and advantages will be readily apparent throughout the course of the following description and drawings, in which:

Figure 1 is a fragmentary perspective view of the device associated with a bed,

Figure 2 is a plan view of the device, showing in dotted lines, various positions of adjustment with respect to a bed, the latter also being shown in dotted lines,

Figure 3 is an end elevation of the invention,

Figure 4 is a fragmentary sectional view of the adjustable tray support,

Figure 5 is a fragmentary sectional view on line x—x of Fig. 3,

Figure 6 is a fragmentary sectional view of the tray holder, and

Figure 7 is a perspective view of the bed engaging base member.

Referring in detail to the drawings, 1 designates a base member of substantially T-form when viewed in plan, provided with a caster receiving depression 2, and a spaced socket 3.

Mounted within the socket 3 as by screw-threads or any other suitable fastening means, is one end of a vertical standard 4 to the opposite or upper end of which is pivotally connected one end of a horizontally extending arm 5.

Hingedly connected to the opposite end of arm 5, for horizontal swinging movement relative thereto, is a second horizontally extending arm 6, said arms being maintained and supported in hinged relation by means of the vertically extending pintle 7 carried by caster 8.

A tray supporting carriage 9, of substantially U-form, has its arms 10 adjacent the bight portion 11 thereof connected to an inverted U-shaped axle 12, the depending free ends of which are adapted to receive ground engaging casters 13. The free ends of the arms 10 are bent inwardly, as at 14, and upwardly as at 15, and are rigidly connected to a pair of spaced vertically extending tubular standards 16, the lower ends of which are connected, in any suitable manner to a disk 17 carried by a caster 18.

A bearing 19 is secured to the tubular standards 16 adjacent the lower ends thereof, and is connected to the opposite free end of arm 6 by means of clamp 20 and bolts 21. The tubular standards 16 are further held in spaced relation by means of metal encircling bands 22 secured thereto as by welding or the like.

Adjacent their upper ends, the tubular standards 16 are each provided with an opening 23 through which is received the free end of a pivoted spring pressed latch 24 carried by each of said standards, for a purpose to be hereinafter more fully described.

Slidably mounted in each of the tubular standards 16 is a substantially right angle rod 25, the lower ends of which are serrated as at 26 for adjustable engagement by the spring pressed latch 24.

The horizontal upper ends of the rods 25 have secured thereto as by means of bolts 27, a tray frame 28. The upstanding ends 29 of which are formed with spaced openings 30 adapted to receive an outturned end of a detachable U-shaped support 31. The tray 28 adjacent each of its end edges is provided with upstanding parts 32 between which is received a detachable tray (not shown).

In operation, the base 1 is placed beneath a bed so that a caster carried thereby is received within the depression 2 thereof whereby the weight

of the bed maintains the base in firm contact with a supporting surface.

The hinged joint constituted by the adjacent ends of the bars **5** and **6** and the pintle **7** is then moved inwardly beneath the bed to the dotted line position shown in Fig. 2 whereby the tray and its support may be adjusted longitudinally of the length of the bed so as to move same toward and away from the user. Thus, the device when used as a bed tray is in the position shown in Fig. 1.

When it is desired to use the device as a bedside table, the joint between bars **5** and **6** is moved inwardly beneath the bed about the standard **4** and the carriage **9** is then swung about the bearing **19** as a pivot so as to assume a position to one side of the bed as also shown in dotted lines in Fig. 2.

During the use of the device as a bed tray, the U-shaped support **31** is removed from the upstanding ends **29** of the tray frame and the tray (not shown) is then placed in horizontal position between the ends of the tray frame **29** and the upstanding parts **32** whereby the tray will be held in a horizontal position for supporting liquids or the like.

If it is desired to use the tray frame for reading or writing either in position over the bed or to one side thereof, the U-shaped support **31** is placed in position as shown in Fig. 1 and the tray (not shown) is then placed thereon so that the tray will be held in an inclined position. It is to be particularly noted that the U-shaped support **31** may be turned end for end or reversed so that the device may be used upon one side of the bed or the other.

It is obvious that vertical adjustment of the tray support may be readily accomplished through the medium of the vertical slidable rods **25** and the spring pressed latches **24**.

It is to be understood that the form of my invention, herewith shown and described, is to be taken as a preferred example of same, and that various changes in the shape, size and arrangement of parts may be resorted to, without departing from the spirit of my invention or the scope of the subjoined claims.

Having thus described my invention, I claim:

1. A bedside table including a pair of spaced vertical tubular standards, means to rigidly connect the standards, caster-bearing means connected to the lower ends of the standards, means to mount the standards for movement to occupy varying positions with respect to the bed, a pair of spaced tray-carrying rods having angular outer ends slidably received in the respective standards and each formed with a series of latch-receiving parts, latch means carried by each of the standards and engageable with selective ones of the latch-receiving parts, and means having floor engaging parts cooperating with the mounting means and connected to the standards to sustain the latter in vertical position.

2. A bedside table including a pair of spaced vertical tubular standards, means to rigidly connect the standards, caster-bearing means connected to the lower ends of the standards, means to mount the standards for movement to occupy varying positions with respect to the bed, a pair of spaced tray-carrying rods having angular outer ends slidably received in the respective standards, adjusting means to hold the rods in various vertical positions, a carriage embodying a substantially U-shaped member having its free ends extending vertically and secured to the standards in the space between the latter, and an inverted U-shaped axle secured to and transversely of the sides of the U-shaped member between the ends thereof and having casters on its ends.

3. A bedside table, including a member formed to seat on a floor and having a caster-receiving part so as to hold the member against the floor by the weight of the bed, a vertical standard connected to the member so as to lie rearwardly of an end of the bed, a horizontal arm pivoted to the standard so as to be movable to underlie the bed bottom, a caster having a pintle connected to the outer end portion of the arm to support the latter against downward movement, a second horizontal arm pivoted at its inner end portion to the caster pintle so as to be also supported by the pintle against downward movement, and being also movable to underlie the bed bottom, a vertical tray-carrying member pivoted to the outer end portion of the second named arm, a caster connected to the lower end of said vertical member, an inwardly extending carriage connected at its outer end to said vertical member at substantially right angles thereto and to underlie the bed bottom, and casters carried by the inner end of the carriage.

GUY F. SCRIVEN.