US00D735728S

(12) United States Design Patent

Kim et al.

(10) Patent No.: US D735,728 S
(45) Date of Patent: ** Aug. 4, 2015

(54) **TELEVISION RECEIVER FRAME**

(71) Applicant: **Samsung Electronics Co., Ltd.**, Suwon-si (KR)

(72) Inventors: **Eui-Seok Kim**, Sungnam-Si (KR); **Su-An Choi**, Seoul (KR)

(73) Assignee: **Samsung Electronics Co., Ltd.**, Suwon-si (KR)

(**) Term: **14 Years**

(21) Appl. No.: **29/468,700**

(22) Filed: **Oct. 2, 2013**

Related U.S. Application Data

(63) Continuation of application No. 29/445,933, filed on Feb. 19, 2013, now Pat. No. Des. 699,231.

(30) **Foreign Application Priority Data**

Dec. 12, 2012 (KR) 30-2012-0060018

(51) **LOC (10) Cl.** **08-07**

(52) **U.S. Cl.**
USPC **D14/451**

(58) **Field of Classification Search**
USPC D14/371–375, 125–129, 336, 337, 448, D14/451, 452, 492, 376–382, 450, 239; 341/12; D6/300, 311–313, 308, 708, D6/310; 348/180, 184, 325, 739; D19/2; 361/679.05–679.07, 679.21
CPC G06F 3/0412; G06F 3/016; G06F 3/0488; G06F 3/011; G06F 3/038; G06F 3/03543; G06F 3/0338; G06F 3/0202; G06F 3/0219; G06F 3/0213; G06F 1/1616; G06F 3/023; G06F 3/04883; G02F 1/13338; G02F 1/1313; G02F 1/1333; G02F 1/135; G02F 1/132; G02F 1/133308; G02F 1/134309; G02F 1/13718; G09G 3/3648; G06K 15/1525; B41J 2/465; G03F 7/70291; G02B 27/0172; G02B 5/30; G02B 2207/0118; G02B 27/0101; F16M 13/02; F16M 13/00; F16M 11/10; F16M 11/04; F16M 2200/08; F16M 11/2021; A47B 21/0314; A47B 88/044; A47B 2021/0335; H02G 3/126; F16B 47/00; F16B 47/006; A47G 1/17; A47K 2201/00
See application file for complete search history.

(56) **References Cited**

U.S. PATENT DOCUMENTS

D31,165	S	*	7/1899	Stiles	D6/300
D37,087	S	*	8/1904	Collins, Jr.	D6/300
899,329	A	*	9/1908	Shorigi	40/765
2,203,737	A	*	6/1940	Moore	40/788
2,668,477	A	*	2/1954	Shaikun	359/854
2,777,232	A	*	1/1957	Kulicke et al.	40/780
2,950,556	A	*	8/1960	Larios	40/788
3,394,479	A	*	7/1968	Siegler	40/786

(Continued)

Primary Examiner — Deanna L Pratt
Assistant Examiner — Katie Mroczka
(74) *Attorney, Agent, or Firm* — NSIP Law

(57) **CLAIM**

The ornamental design for a television receiver frame, as shown and described.

DESCRIPTION

FIG. **1** is a front perspective view of a television receiver frame showing our new design;
FIG. **2** is a front view thereof;
FIG. **3** is a rear view thereof;
FIG. **4** is a left-side view thereof;
FIG. **5** is a right-side view thereof;
FIG. **6** is a top view thereof;
FIG. **7** is a bottom view thereof; and,
FIG. **8** is a rear perspective view thereof.
The broken lines are for environmental purposes only and form no part of the claimed design.

1 Claim, 7 Drawing Sheets

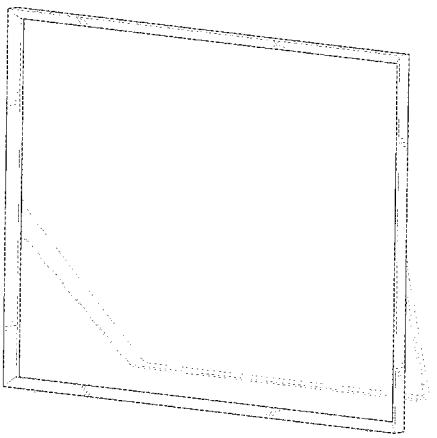

(56) **References Cited**

U.S. PATENT DOCUMENTS

4,177,590	A	*	12/1979	Tushner et al.	40/792
4,529,278	A	*	7/1985	Nugent	359/870
D452,995	S	*	1/2002	Barry	D6/300
6,967,635	B2	*	11/2005	Hung	345/32
D519,117	S	*	4/2006	Lewis	D14/374
D532,823	S	*	11/2006	Pena Angarita	D19/52
D572,676	S	*	7/2008	Niitsu	D14/126
D572,677	S	*	7/2008	Niitsu	D14/126
D600,695	S	*	9/2009	Niitsu et al.	D14/371
D623,653	S	*	9/2010	Okoshi et al.	D14/450
D635,689	S	*	4/2011	Van Faasen et al.	D25/60
D649,663	S	*	11/2011	Tarter et al.	D25/199
D657,792	S	*	4/2012	Lee et al.	D14/374
D666,619	S	*	9/2012	May	D14/447
D684,379	S	*	6/2013	Sim	D6/300
D691,572	S	*	10/2013	Lee et al.	D14/126
D695,700	S	*	12/2013	Seong	D14/126
D699,205	S	*	2/2014	Kim et al.	D14/126
D699,231	S	*	2/2014	Kim et al.	D14/239
D699,697	S	*	2/2014	Moon et al.	D14/126
D710,702	S	*	8/2014	Damatov	D9/456
D718,731	S	*	12/2014	Lee et al.	D14/126

* cited by examiner

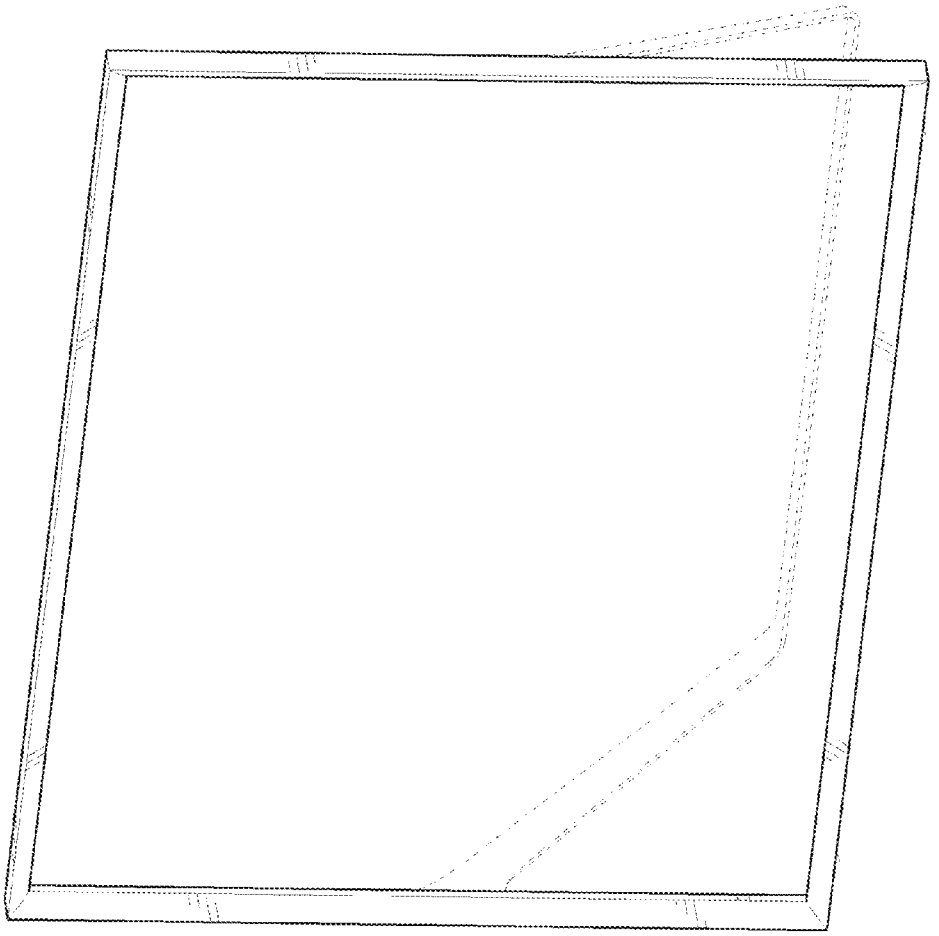

FIG. 1

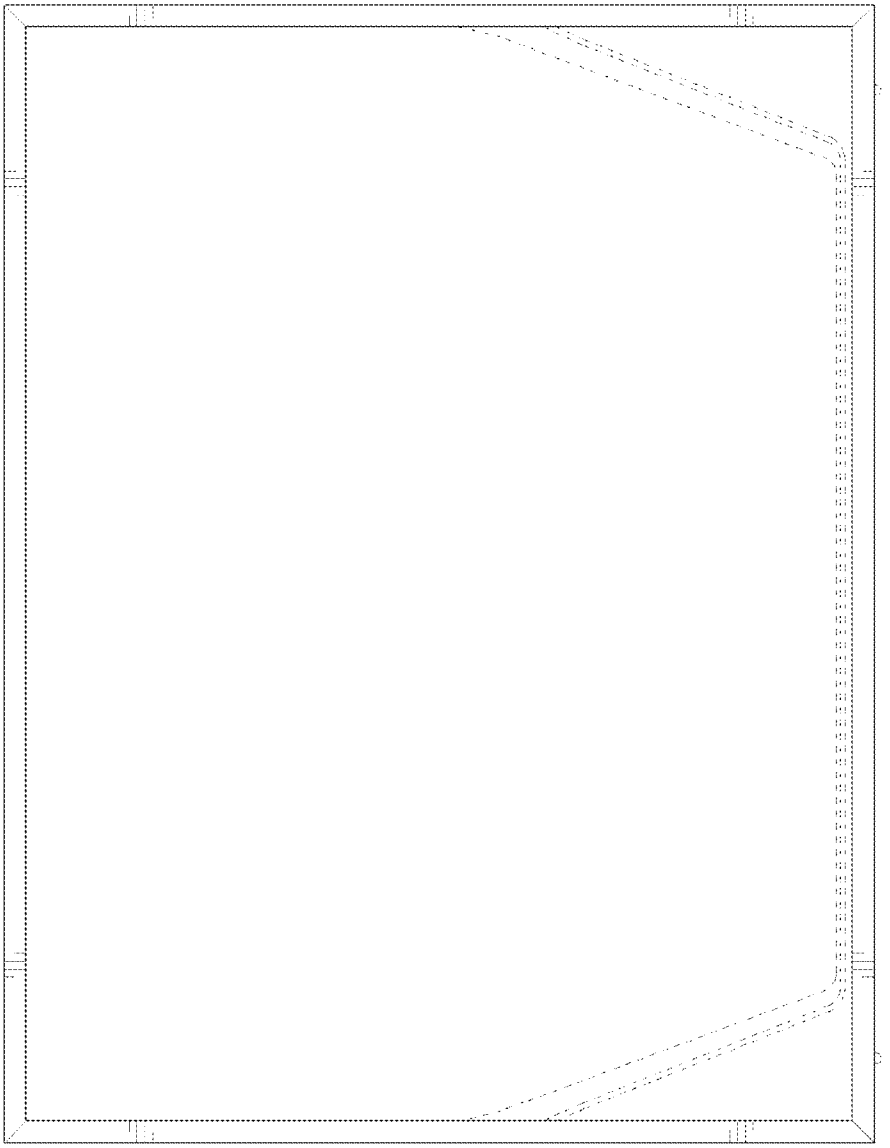

FIG. 2

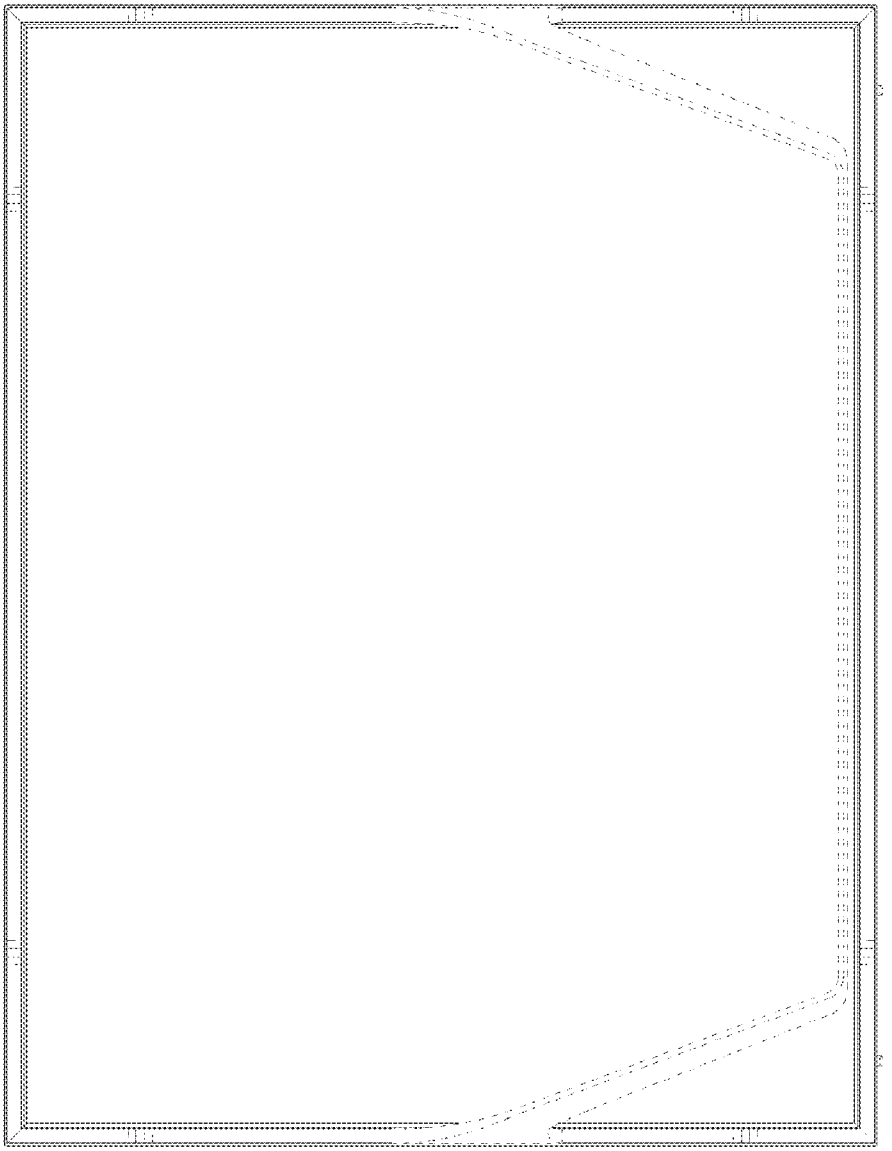

FIG. 3

FIG. 5

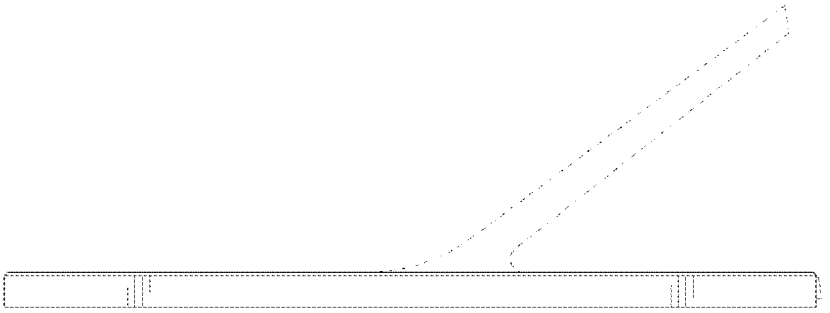

FIG. 4

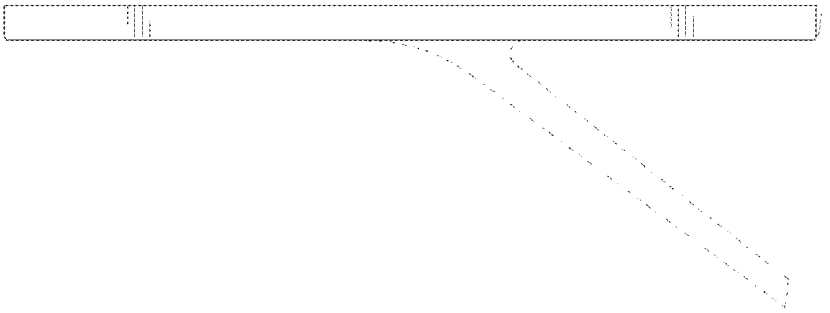

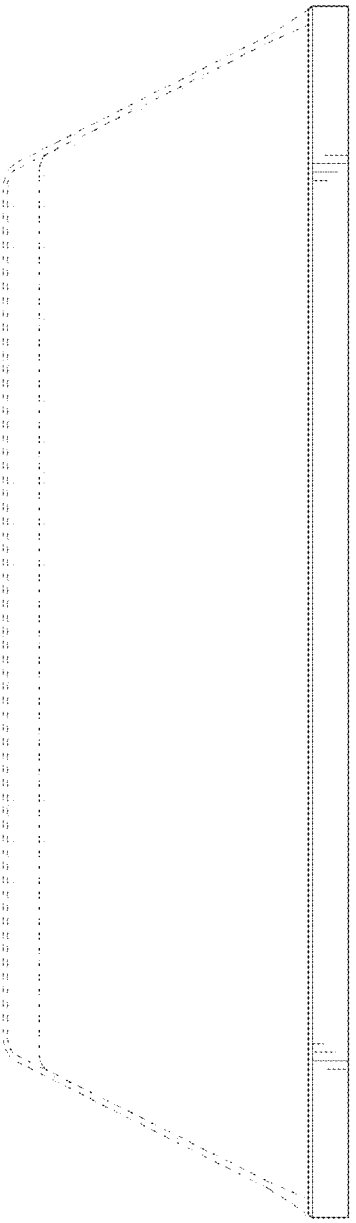

FIG. 6

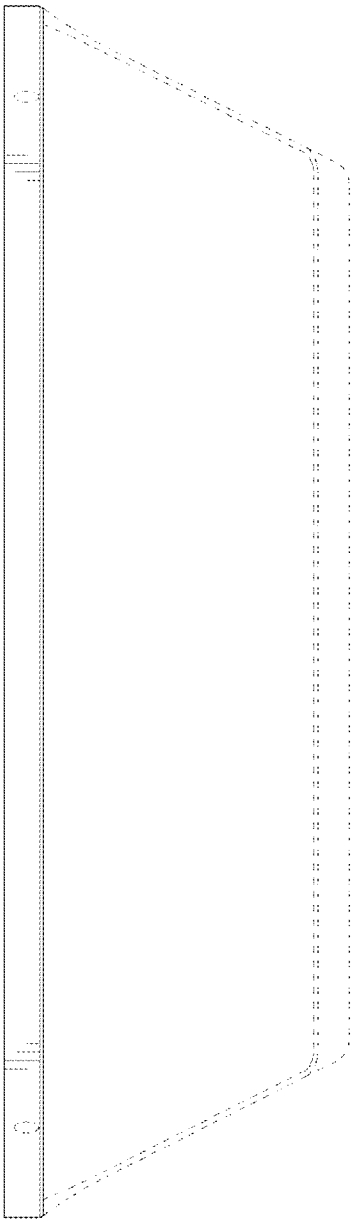

FIG. 7

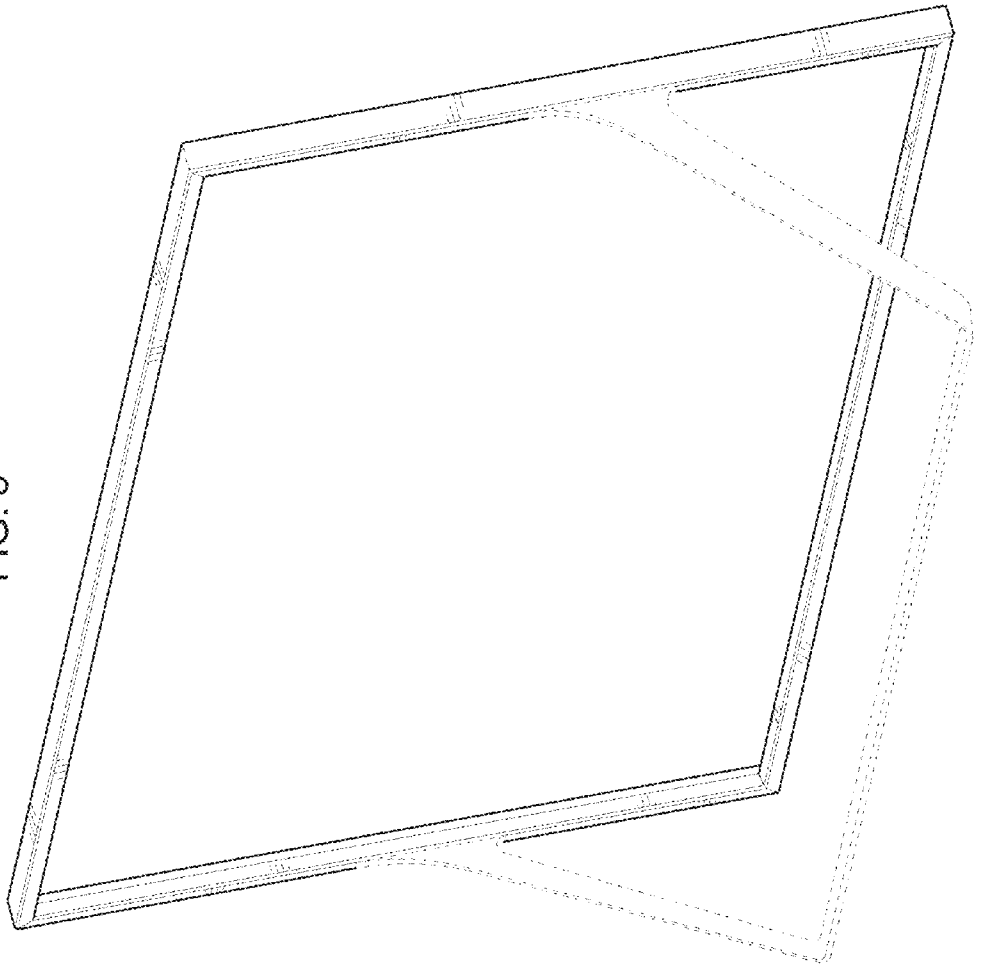

FIG. 8