April 18, 1950 V. W. SAFRANSKI 2,504,733

DISPENSER FOR STRAWS AND THE LIKE

Filed Feb. 17, 1948 2 Sheets-Sheet 1

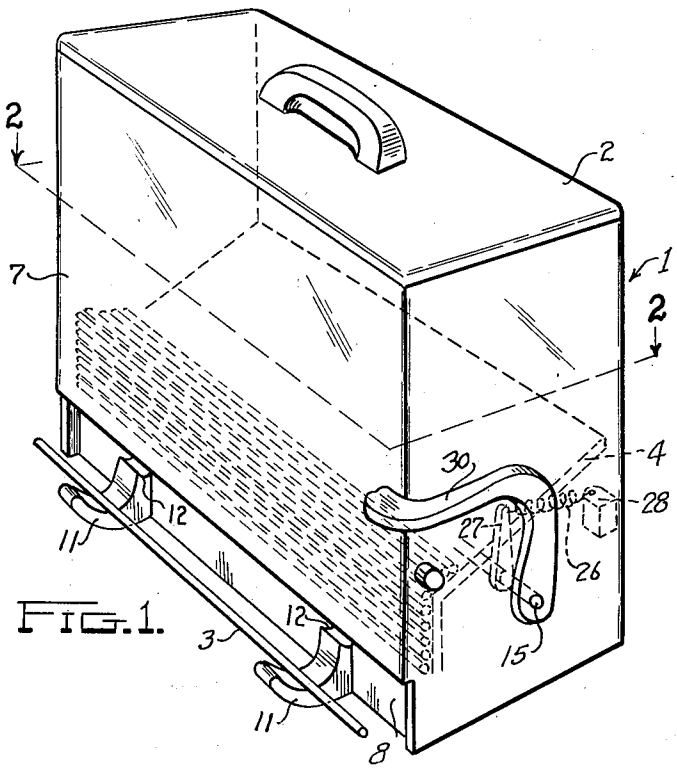

FIG. 1.

FIG. 2.

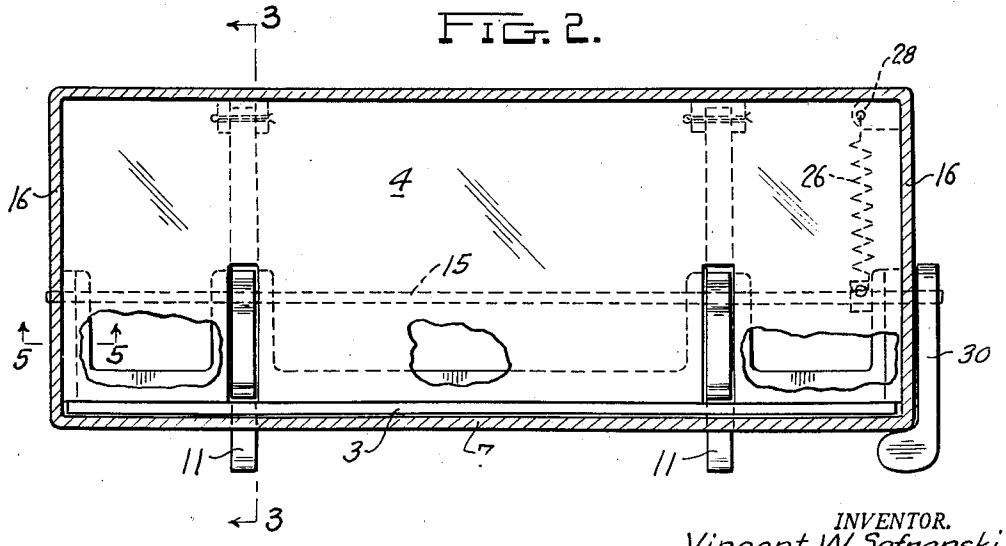

INVENTOR.
Vincent W. Safranski
BY Owen & Owen.

ATTORNEYS

April 18, 1950 V. W. SAFRANSKI 2,504,733

DISPENSER FOR STRAWS AND THE LIKE

Filed Feb. 17, 1948 2 Sheets-Sheet 2

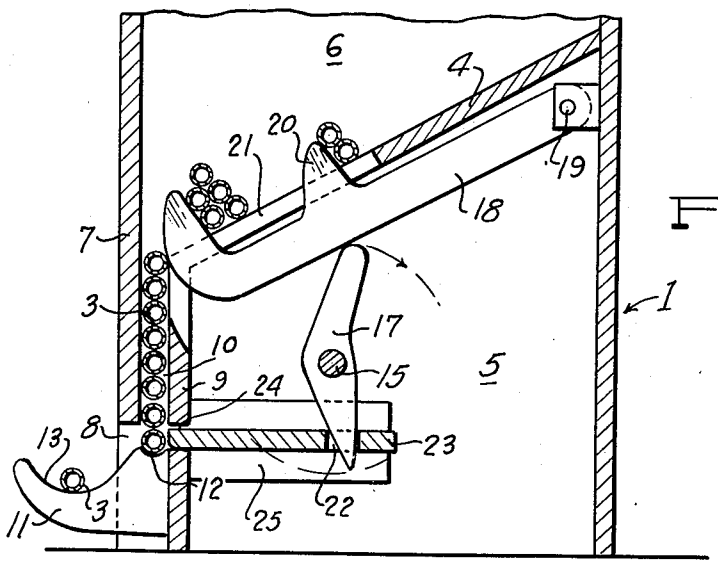

FIG. 3.

FIG. 4.

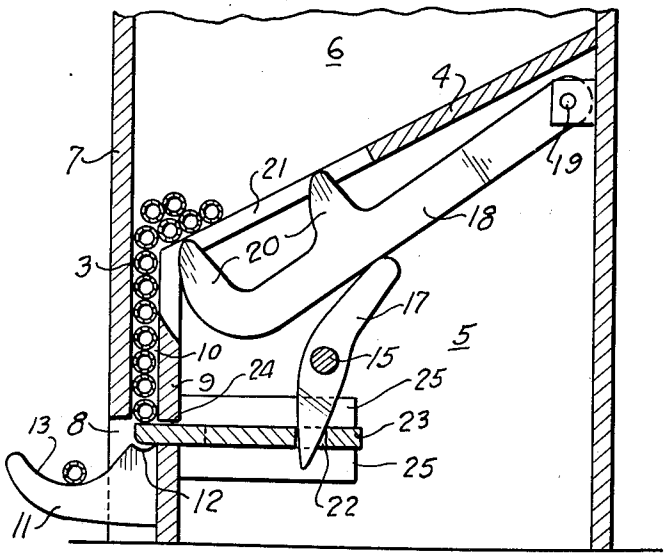

FIG. 5.

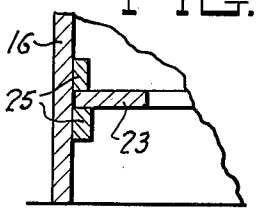

INVENTOR.
Vincent W. Safranski
BY Owen & Owen,
ATTORNEYS

Patented Apr. 18, 1950

2,504,733

UNITED STATES PATENT OFFICE

2,504,733

DISPENSER FOR STRAWS AND THE LIKE

Vincent W. Safranski, Toledo, Ohio

Application February 17, 1948, Serial No. 8,938

1 Claim. (Cl. 312—83)

1

This invention relates to improvements in dispensing apparatus of the type employed for ejecting straws or other small slender articles from a container.

An object of the invention is the provision of a novel dispensing apparatus of this class of simple and efficient construction with few operable parts, and which is easily operated to eject individual articles from the container.

Further objects and advantages of the invention will be apparent from the following detailed description and from the accompanying drawings illustrating one embodiment thereof, in which:

Fig. 1 is a perspective view of an apparatus embodying the invention, with one article shown in fully ejected picking-up position; Fig. 2 is a horizontal cross-section on the line 2—2 in Fig. 1; Figs. 3 and 4 are enlarged vertical sections on the line 3—3 in Fig. 2, with the movable parts in different positions of operation, and Fig. 5 is an enlarged fragmentary section on the line 5—5 in Fig. 2.

Referring to the drawings, 1 designates a box-like container of rectangular form in cross-section having a removable top 2 and being of suitable depth to hold a quantity of straws or other articles 3 to be dispensed. The bottom 4, which is downwardly and forwardly inclined, is disposed a distance above the base edge of the container to provide a space 5 below and a space 6 above the bottom in which latter the articles 3 are contained. The front wall 7 of the container terminates short of the lower container edge to provide a dispensing opening 8, and the bottom 4 at its front lower end terminates short of said front wall substantially the width or diameter of the articles 3, and then continues down to the base edge of the container in the form of a wall or partition 9. This partition cooperates with the front wall 7 to form a vertical chute or dispensing way 10 leading to the top of the front opening 8.

Article supporting fingers 11 project forwardly from the lower portion of the partition 9 through and forwardly of the opening 8 a distance below the top of such opening substantially equal to the diameter of the articles 3, as shown. The fingers 11 are spaced lengthwise of the opening 8 and each has a shallow cross recess 12 at the inner end of its top side edge in vertical register with and substantially the width of the dispensing way 10 to provide seats for the lowermost article 3 in said way and prevent it from continuing by gravity out through the opening 8. The top edge of fingers 11 extend downward, forward and then

2

upward from the front edges of the recesses 12 to provide concaved seats 13 to support the articles in hand grasping position when ejected from the recesses 12.

The article agitating and dispensing means for the articles 3 includes a shaft 15 mounted lengthwise of the container within the space 5 and journaled at its ends in the end walls 16 and carrying cross pieces 17 in spaced relation lengthwise thereof. The upper ends of the cross pieces 17 engage the under sides of agitating fingers 18 to impart vertical rocking movements thereto when the shaft is rocked in a direction to move the upper ends of the members 17 forward. The fingers 18 are pivoted at their rear ends in the rear of the container slightly below the bottom 4, as shown at 19, and the fingers project forwardly therefrom adjacent to the partition 9 and are provided on their tops with one or more spurs 20 for projecting up through registering slots 21 in the forward edge portion of the bottom 4 to engage and effect agitation of the articles 3 in the lower portion of the space 6 when the fingers 8 are raised.

The lower ends of the cross members 17 engage loosely in openings 22 in an ejector slide 23, which is guided for horizontal reciprocatory movements with its forward end working through a slot 24 in the partition 9 immediately above the recesses 12 in the fingers 11. The ejector 23 is guided by strips 25 on the ends of the container and when the ejector slide is moved forward its forward edge portion engages and ejects an article 3 from the recesses 12, and in such position is disposed under the next article in order and supports the column of such articles in the dispensing way 10, as shown in Fig. 4. When the slide 23 is retracted, the column of articles in the way 10 lower the width of one article so that the lowermost article in the column then rests in the recesses 12.

The shaft 15 with its cross members 17 is normally held in the position shown in Fig. 4, with the slide 23 projected forward and the agitating finger 18 lowered by a coiled contractile spring 26 connecting an arm 27 on the shaft to an anchoring part 28 at the rear of the container. In this position the slide 23 is held forward in discharge-way obstructing position and the agitating finger 18 is supported in lowered position with the ends of its spurs 20 below the top surface of the floor 4 so as to permit the articles 3 to freely pass down the floor to the discharge-way 10. When the shaft 15 is released after having been rocked to the position shown

in Fig. 3, it is returned by the action of the spring to the normal position shown in Fig. 4, and the lowermost article 3 in the way 10, which is then resting in the recesses 12, will be ejected forward from such recesses into the larger recesses or seats 13 of the fingers 11. The shaft 15 projects beyond one end of the container 1, the right end in the present instance, and is provided with an arm 30 which preferably extends upwardly and forwardly from the shaft to convenient position at the forward end of the container for easy manipulation. In the present instance, two agitating fingers 18 and two rocker members 17 are provided so that the movable parts of the apparatus comprise merely the ejector slide 23, the two fingers 18 and the rocker shaft 15 with its cross members 17.

I wish it understood that my invention is not limited to any specific construction, arrangement or form of the parts, as it is capable of numerous modifications and changes without departing from the spirit of the claim.

Having thus described my invention, what I claim as new, and desire to secure by United States Letters Patent, is:

In an apparatus of the class described, a container for articles to be dispensed, said container having a front wall and a bottom inclined downwardly and forwardly to a point adjacent said front wall, said front wall having an article discharge opening in its lower portion, guide means extending downwardly from the forward edge of said bottom at the rear of said front wall and cooperating therewith to form a discharge-way leading from the container space above the bottom to said opening, means forming article rests in register with the lower end of said discharge-way and disposed a distance below the top of

said opening corresponding substantially to the diameter of the articles to be dispensed whereby an article resting on said last means will support the next succeeding article at a position in said way above the top edge of said opening, ejector means reciprocally movable over said rest to eject an article therefrom and then to be retracted to permit another article to lower from the discharge-way onto the rest, agitating fingers pivoted below said bottom and projecting forwardly thereunder and rockable to project parts thereof up through the bottom and into article agitating position in the container, a rock-shaft disposed between said fingers and ejector means, cross members on said shaft engaging said fingers and ejector means and operable by a rocking of the shaft in one direction to raise the fingers to agitating position and to retract the ejector means and operable when rocked in the opposite direction to lower said fingers and impart a forward ejecting movement to the ejector means, and means yieldingly holding said shaft in said last rocked position.

VINCENT W. SAFRANSKI.

REFERENCES CITED

The following references are of record in the file of this patent:

UNITED STATES PATENTS

Number	Name	Date
1,396,720	Mouawad	Nov. 8, 1921
2,218,041	Hutaff	Oct. 15, 1940

FOREIGN PATENTS

Number	Country	Date
80,784	Germany	Apr. 29, 1895