May 22, 1934. W. H. BOSWORTH 1,959,777

DRIVING CONNECTION

Filed Feb. 10, 1932 2 Sheets-Sheet 1

Fig. 1.

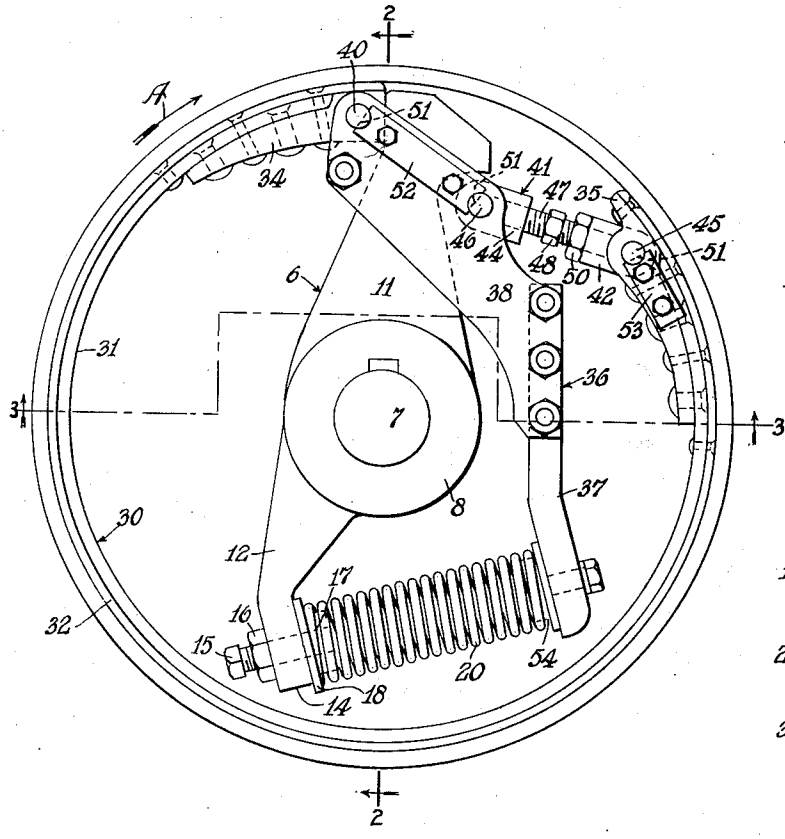

Fig. 2.

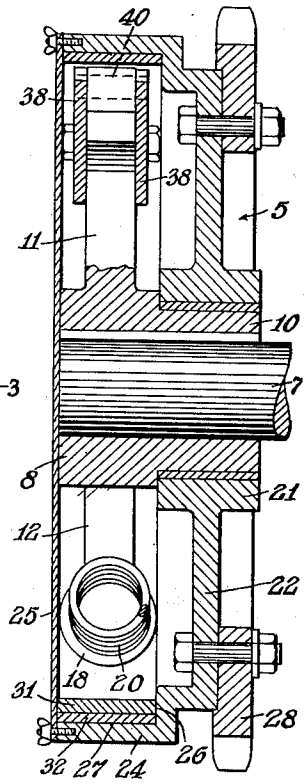

Fig. 3.

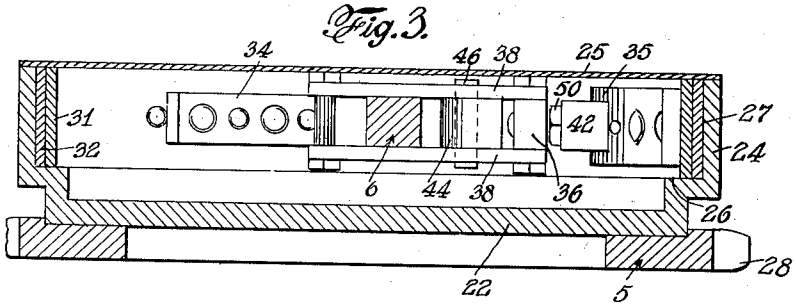

INVENTOR

William H. Bosworth

BY

Williams, Brick & Evans

ATTORNEYS

May 22, 1934. W. H. BOSWORTH 1,959,777

DRIVING CONNECTION

Filed Feb. 10, 1932 2 Sheets-Sheet 2

Fig. 4.

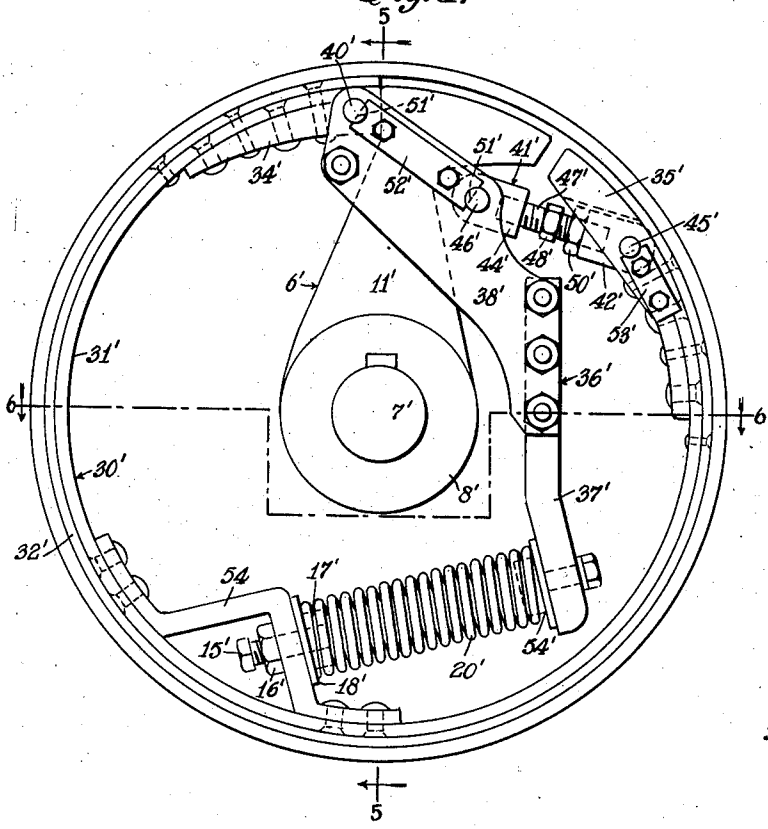

Fig. 5.

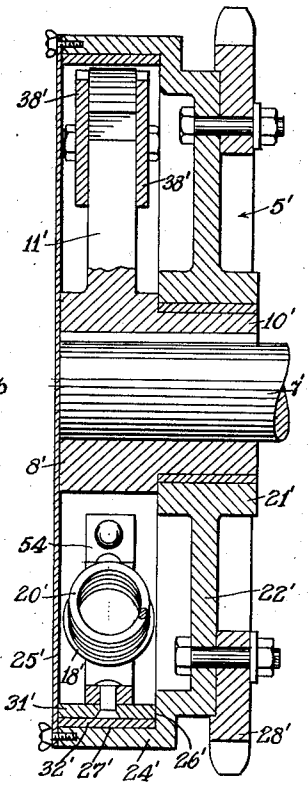

Fig. 6.

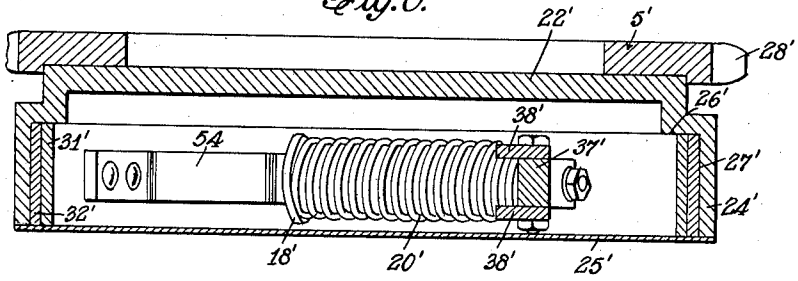

INVENTOR

William H. Bosworth

BY

Williams, Rich & Gross

ATTORNEYS

Patented May 22, 1934 1,959,777

UNITED STATES PATENT OFFICE

1,959,777

DRIVING CONNECTION

William H. Bosworth, Yonkers, N. Y., assignor to George Haiss Manufacturing Co., Inc., New York, N. Y., a corporation of New York

Application February 10, 1932, Serial No. 592,059

2 Claims. (Cl. 64—99)

This invention relates to driving connections of the torque-responsive-slip-on-over-load type, the connection herein shown being particularly adapted for use in wagon loaders and excavators of the type described in United States Patent No. 1,790,810, granted February 3, 1931, to R. C. Haiss.

Wagon loaders and excavators of the above type are characterized by an endless conveyor, including a plurality of buckets, carried by endless chains which are driven from a suitable power source, such as an internal combustion engine, operatively connected to suitable head sprockets through the medium of a head shaft at the upper end of the conveyor, the conveyor chains being utilized to transmit power of rotation to a digging and feeding mechanism, at the lower end of the conveyor, which is employed to loosen the material to be loaded and move it into the path of the conveyor buckets.

In a wagon loader or excavator of the type above generally described, it is desirable to provide means at a point intermediate the conveyor and the power source for relieving the digging mechanism, as well as the power unit and driving connections between such unit and the digging mechanism, of undue strain under over-load conditions, such for example, as when the digging mechanism encounters an obstruction of such proportions as would stall the engine or cause damage to the machine.

An object of the invention is to provide a simple, reliable, effective and otherwise satisfactory driving connection of the torque-responsive-slip-on-over-load type by which power may be transmitted from the power unit to the driving shaft of the conveyor, whereby, although the machine as a whole including its power unit is relieved of undue strains, it will resume functioning the instant the opposition to normal operation is overcome or removed.

Other objects and advantages of the invention will become apparent from the following description, taken in connection with the accompanying drawings, in which—

Fig. 1 is a view in elevation of the driving connection embodying this invention, the cover plate being removed; Fig. 2 is a sectional view taken on line 2—2 of Fig. 1, the cover plate being shown in position, Fig. 3 is a sectional view taken on line 3—3 of Fig. 1; Fig. 4 is a view similar to that of Fig. 1, and showing a modified form of the invention; Fig. 5 is a sectional view taken on line 5—5 of Fig. 4, and Fig. 6 is a sectional view taken on line 6—6 of Fig. 4.

Referring to Figs. 1 to 3 inclusive, the driving connection embodying this invention includes a driving member 5 and a driven member 6, the latter of which comprises a shaft 7, which may be the head shaft of a conveyor of the type hereinbefore generally described. The driven member 6 further comprises a hub 8, which is secured to the shaft 7 and is provided at one end with a bearing portion 10. The hub 8 is formed with a radially projecting torque arm 11 and with a substantially diametrically opposite abutment in the form of a radial arm 12. The abutment 12 is formed at its outer end with a foot portion 14, provided with a cap screw 15, the shank portion of which carries a lock nut 16 by which the cap screw may be securely locked against rotation. The cap screw 15 projects through the foot portion 14 and into the socket 17 of a spring-receiving boss 18, adapted to receive one end of a compression spring 20 and hold it against displacement on the abutment 12. The cap screw 15 functions to vary the compression force of the spring 20 so that the point, considered in terms of torque measured in inch pounds, at which the driving member may slip with respect to the driven member, may be varied.

The driving member 5 includes a hub portion 21, which is journalled on the bearing portion 10 of the driven member 6 and is provided with a disc 22, the outer margin of which is formed with an annular flange 24 to which may be detachably connected a cover plate 25, the annular flange 24 being stepped intermediate its outer edge and its point of connection with the disc 22 so as to provide a shoulder 26, which forms an annular channel 27. Secured to the disc 22, is a power transmitting element, such as a sprocket 28, by which the driving member 5 may be operatively connected to a suitable power unit such as an internal combustion engine, not shown.

Within the annular channel 27, is disposed an expansible and contractible friction element 30 of the split-ring type which includes a more or less resilient split ring 31, to which is connected a strip 32 of suitable friction material such as brake lining. The friction element 30 also includes a pair of end blocks 34 and 35, the former of which is connected to the split ring 31 adjacent the outer end of the torque arm 11, and the latter of which is connected to the other end of the split ring as shown in Fig. 1.

The actuating means for the friction element 30 comprises a lever 36, which includes an arm 37, to the opposite sides of which lever are connected a pair of plates 38, which are disposed at opposite sides of the torque arm 11 and are pivotally con-

nected to the end block 34 by a pivot pin 40. The lever 36 is pivotally connected at a point intermediate its ends to the end block 35 by an adjustable link 41 which, together with the lever 36, constitutes a toggle connection between opposite ends of the friction element 30. The link 41 includes a pair of internally screw-threaded link or socket members 42 and 44, the former of which is pivotally connected to the end block 35 by a pivot pin 45, and the latter of which is disposed intermediate the plates 38 and is pivotally connected thereto by a pivot pin 46. The link 41 also includes a connector screw 47, the opposite ends of which are screwed into the socket members 42 and 44, the lead of the threads of the opposite ends of the connector screw being such that the effective length of the link 41 may be increased or decreased by turning the connector screw in one direction or the other, whereby the proper initial toggle-angle, in relation to the force of the compression spring 20, may be obtained to insure, regardless of brake-band wear on the friction element 30, maintenance of the point, considered in terms of torque measured in inch pounds, at which relative rotation takes place between the driving member 5 and the driven member 6. Preferably the connector screw 47 is provided intermediate its ends with a wrench-receiving portion 48 to which a wrench may be applied to enable the adjustment of the link 41 to be easily made. Also the connector screw 47 is provided with a lock nut 50 which may be screwed down into firm engagement with the adjacent socket member 42, whereby the link 47 may be locked in any given position of adjustment. In order that the pivot pins 40, 45 and 46 may be locked against longitudinal displacement, they are provided on their cylindrical surfaces with notches 51 adapted for the reception of locking plates 52 and 53 which may be placed in their respective positions shown in Figure 1 and there secured to the lever 36 and to the block 35, respectively, by suitable means, such as lag screws.

The compression spring 20, hereinbefore referred to, is disposed intermediate the free end of the lever 36 and the foot portion 14 of the abutment 12, the spring being held against displacement with respect to the lever 36 by a spring-receiving boss 54 which is rigidly secured to the outer end of the arm 37 and differs from the spring-receiving cup 18 hereinbefore particularly described only in that it is non-adjustable. By reason of the relation of the spring 20 to the lever 36, such spring functions to maintain the friction element 30 in intimate engagement with the inner wall of the annular flange 24 of the driving member 5, and thereby tends to maintain a driving connection between the driving member 5 and driven member 6 at all times, even under over-load conditions when the driving member is permitted to slip with respect to the driven member. Because of the adjustability of the spring 20, the point, considered in terms of torque measured in inch pounds, at which the driving member 5 is permitted to slip with respect to the driven member 6 may be within a reasonably wide range, it being understood that the greater the compression force of the spring 20 the greater will be the maximum load before the driving member can slip with respect to the driven member.

In operation, the driving member 5 is rotated in the direction of the arrow A in Figure 1, and the friction element 30 is maintained in an expanded condition and in intimate contact with the flange 24 of the driving member under the influence of the spring 20, with the result that the driven member is rotated due to the abutting engagement of the block 34 with the torque arm 11 of the driven member. As abnormal operating conditions are encountered which tend to retard rotation of the driven member 6, certain forces are set up, as will be readily understood from the mathematical equations set forth in United States Reissue Patent No. 12,627, granted to H. B. Stilz, April 2, 1907, which forces upon reaching overload proportions, cause the friction element 30 to slip on the flange 24, notwithstanding the force exerted by the spring 20, thereby permitting the driving member to then rotate with respect to the driven member which at that time remains stationary and continues to so remain until excessive load conditions cease to exist, whereupon a driving action between the driving and driven members is again established.

Although the members 5 and 6 of the driving connection shown in Figs. 1 to 3, inclusive, have been respectively referred to as a driving member and as a driven member, it is obvious that the member 6 may be employed as the driving member and the member 5 employed as the driven member in which case the driving connection, as a whole, when rotated in a direction opposed to the direction of rotation indicated by the arrow A in Fig. 1, will function in the manner above described.

Referring to the modified form of the invention shown in Figs. 4 to 6, inclusive, wherein primed reference characters, corresponding to the unprimed reference characters employed in Figs. 1 to 3, inclusive, are used to designate such elements of the modified form of the invention as have previously been described, it will be noted that the compression spring 20', instead of cooperating with an abutment carried by the hub 8', cooperates with an abutment 54 secured to the split ring 31' of the friction element 30'. The abutment 54 is preferably V-shaped and thus provides ample clearance intermediate its arms and the split ring to permit a suitable tool, such as a wrench, to be applied to the cap screw 15' and the lock nut 16' when it is desired to vary the compression force of the spring 20'. Aside from the above changes the modified form of the invention is the same as the driving connection shown in Figs. 1 to 3, inclusive, except that the head or outer end of the torque arm 11' is of greater arcuate length so that it more nearly engages the end block 35', which is a part of the friction element 30' and which is of a somewhat greater arcuate length than the corresponding end block 35 so as to leave but a slight clearance between itself and the torque arm when the torque arm is in abutting engagement with the end block 34' at the opposite end of the friction element.

A detailed description of the operation of the modified form of the driving connection is deemed unnecessary, in view of the herein described operation of the form of invention shown in Figs. 1 to 3, inclusive, but it is desired to emphasize the fact that the modified form of the invention will so function as to permit relative rotation between the members 5' and 6' under abnormal load conditions regardless of which of these members is the driving member and regardless of whether the driving connection is rotated in one direction or the other, it being understood that power of rotation is transmitted from one member to the other by reason

of the abutting engagement of the torque arm 11' with the end block 34', when the driving connection is rotated in one direction, and by reason of the abutting engagement of the torque arm 11', with the end block 35', when the driving connection is rotated in the opposite direction. Also, it will be understood that, regardless of the direction of rotation and regardless of which of the members 5' and 6' is the driving member, the member that is being driven under normal operating conditions but permitted to slip with respect to the driving member under abnormal operating conditions remains stationary until excessive load conditions cease to exist, whereupon the driving connection between the driving and driven members is again established.

It will be understood that various changes, other than those herein shown and described, may be made without departing from the spirit of the invention or the scope of the following claims.

What is claimed is:

1. A driving connection comprising driving and driven members mounted concentrically for relative rotation, an expansible and contractible friction element of the split-ring type adapted to rotate with one of said members under normal operating conditions and between which and that member relative rotation is afforded under abnormal operating conditions, a radially disposed torque arm connected to the other of said members and adapted to rotate with said friction element under all conditions of operation, the outer end of said arm being disposed intermediate the opposite ends of said friction element and there cooperating with said friction element as a power transmitting medium between said driving and driven members under normal operating conditions, friction-element-actuating means comprising a lever pivotally supported with respect to one end of said friction element, a link connected to the other end of said frictional element said link being connected to said lever intermediate its ends and forming therewith a toggle, spring means cooperating with said lever to exert a force on said friction element tending to hold said element in frictional contact with said one of said members at all times and adjusting means for varying the force of said spring means whereby the point at which relative rotation is effected between said driving and driven members, considered in terms of torque measured in inch pounds, may be varied.

2. A driving connection comprising driving and driven members mounted concentrically for relative rotation, an expansible and contractible friction element of the split-ring type adapted to rotate with one of said members under normal operating conditions and between which and that member relative rotation is afforded under abnormal operating conditions, a radially disposed torque arm connected to the other of said members and adapted to rotate with said friction element under all conditions of operation, the outer end of said arm being disposed intermediate the opposite ends of said friction element and there cooperating with said friction element as a power transmitting medium between said driving and driven members under normal operating conditions, friction-element-actuating means comprising a lever pivotally supported with respect to one end of said friction element, a link connected to the other end of said friction element, said link being connected to said lever intermediate its ends and forming therewith a toggle, spring means cooperating with said lever to exert a force on said friction element tending to hold said element in frictional contact with said one of said members at all times, adjusting means for varying the force of said spring means whereby the point at which relative rotation is effected between said driving and driven members, considered in terms of torque measured in inch pounds, may be varied, and toggle-adjusting means for varying the toggle-angle of said toggle whereby the point at which relative rotation between said driving and driven members takes place may be maintained under all operating conditions irrespective of wear on said friction element.

WILLIAM H. BOSWORTH.