Innovation, Sciences et Développement économique Canada
Office de la Propriété Intellectuelle du Canada

Innovation, Science and Economic Development Canada
Canadian Intellectual Property Office

CA 2974749 A1 2018/03/30

(21) 2 974 749

(12) DEMANDE DE BREVET CANADIEN
CANADIAN PATENT APPLICATION

(13) A1

(22) Date de dépôt/Filing Date: 2017/07/26

(41) Mise à la disp. pub./Open to Public Insp.: 2018/03/30

(30) Priorité/Priority: 2016/09/30 (US15/281263)

(51) Cl.Int./Int.Cl. *B60R 16/023* (2006.01), *B64D 11/00* (2006.01), *B64D 9/00* (2006.01), *H04B 5/00* (2006.01)

(71) Demandeur/Applicant:
THE BOEING COMPANY, US

(72) Inventeur/Inventor:
WALKER, CHARLES MATTHEW, US...

(74) Agent: SMART & BIGGAR

(54) Titre : SYSTEMES ET METHODES DE TRANSMISSION SANS FIL DE SIGNAUX ELECTRIQUES VERS UN ENSEMBLE DE BAC DE RANGEMENT D'UN VEHICULE

(54) Title: SYSTEMS AND METHODS FOR WIRELESS TRANSMITTING ELECTRICAL SIGNALS TO AN OVERHEAD STOWAGE BIN ASSEMBLY OF A VEHICLE

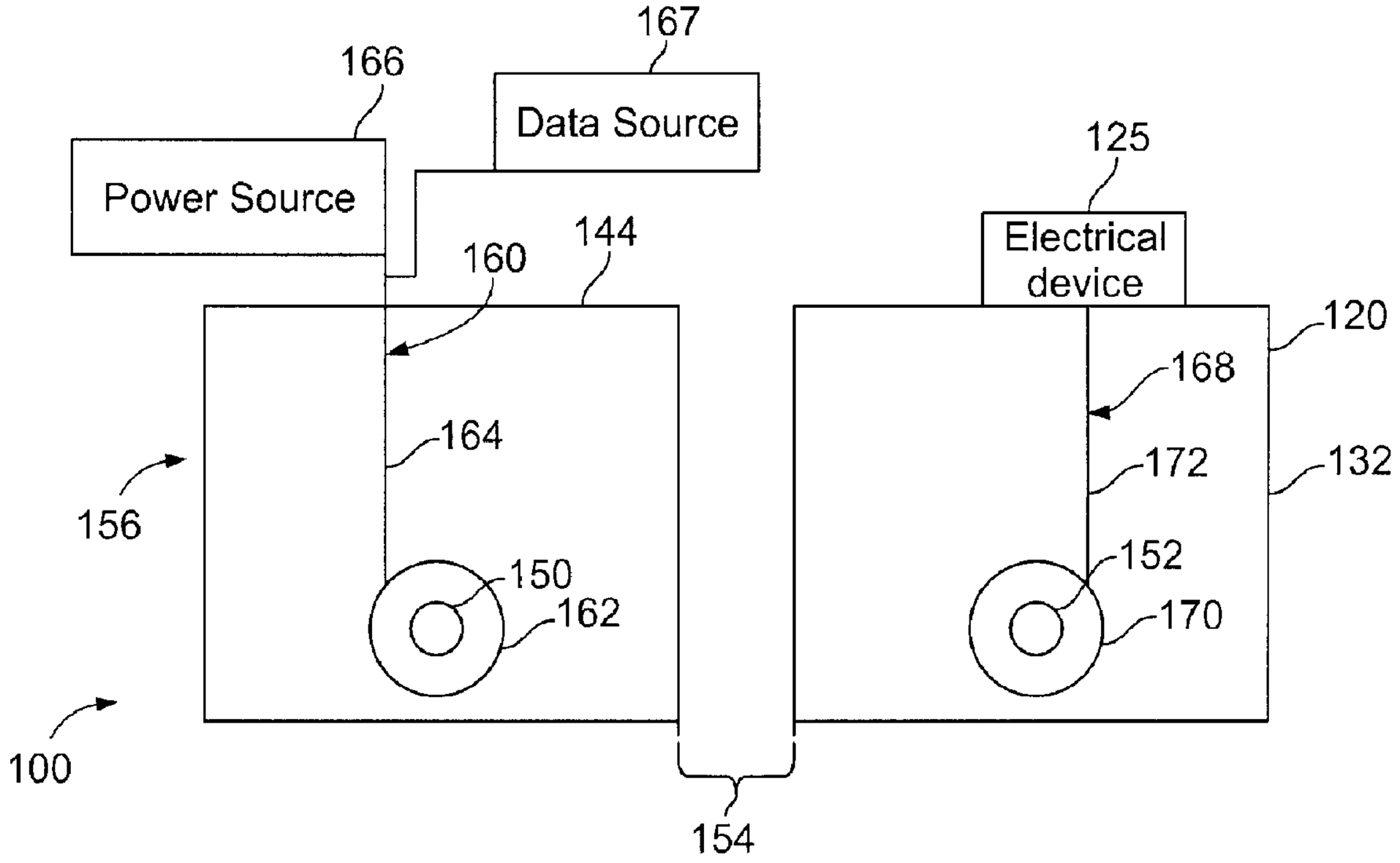

(57) Abrégé/Abstract:
A vehicle includes an internal cabin, and a system for wirelessly transmitting electrical signals between a first component and a second component within the internal cabin. The system includes a first circuit including a first coil secured to the first component.

(21) 2 974 749

(13) A1

(57) Abrégé(suite)/Abstract(continued):
The first coil is electrically connected to one or both of a power source or a data source onboard the vehicle. A second circuit includes a second coil secured to the second component. The second coil is electrically connected to an electrical device secured to the second component. The first circuit is separated from the second circuit by a gap. The first coil is configured to receive one or more electrical signals from the power source and/or the data source. The electrical signals are induced in the second circuit by the first circuit and transmitted to the electrical device.

ABSTRACT

A vehicle includes an internal cabin, and a system for wirelessly transmitting electrical signals between a first component and a second component within the internal cabin. The system includes a first circuit including a first coil secured to the first component. The first coil is electrically connected to one or both of a power source or a data source onboard the vehicle. A second circuit includes a second coil secured to the second component. The second coil is electrically connected to an electrical device secured to the second component. The first circuit is separated from the second circuit by a gap. The first coil is configured to receive one or more electrical signals from the power source and/or the data source. The electrical signals are induced in the second circuit by the first circuit and transmitted to the electrical device.

SYSTEMS AND METHODS FOR WIRELESSLY TRANSMITTING ELECTRICAL SIGNALS TO AN OVERHEAD STOWAGE BIN ASSEMBLY OF A VEHICLE

FIELD OF EMBODIMENTS OF THE DISCLOSURE

Embodiments of the present disclosure generally relate to stowage bin assemblies within vehicles, and, more particularly, to systems and methods for wirelessly transmitting electrical signals to an overhead stowage bin assembly within a vehicle.

BACKGROUND OF THE DISCLOSURE

Commercial aircraft typically include an interior cabin that may be divided into numerous sections. A cockpit is generally separated from a passenger cabin, which may include a first class section, a business class section, and a coach section. The passenger cabin may also include one or more work areas for flight personnel, such as galleys, which may include food and beverage storage structures. One or more aisles pass through the passenger cabin and connect each of the passenger sections to one or more paths to one or more doors of the aircraft.

Overhead stowage bins are typically positioned above rows of seats within a commercial aircraft. Each overhead stowage bin is configured to be moved between an open position and a closed position. In the open position, passengers may place carry-on luggage within a moveable bin or bucket. Before the aircraft leaves a terminal, flight attendants ensure that each stowage bin is securely closed.

Stowage bins are being developed in which electrical components may be mounted thereon. For example, an electric latch or lock may be mounted to a bucket of an overhead stowage bin. In order to supply power to the electric latch or lock, standard electrical connectors are typically used. For example, a standard plug and receptacle style connector may be used to electrically connect an electric lock on a moveable bucket to a fixed strongback.

However, space between a strongback and a bucket may not be large enough to accommodate such electrical connectors. Further, during an assembly process, the

CA 2974749 2017-07-26

process of securing the separable portions of an electrical connector to a stowage bin may provide difficult and awkward. Indeed, certain electrical connectors may be very difficult to mount to certain moving parts of a stowage bin. Further, wiring between a fixed strongback and a moveable bucket may be susceptible to being pinched and damaged as the bucket is moved with respect to the strongback.

SUMMARY OF THE DISCLOSURE

A need exists for an efficient system and method for transferring electrical signals between a strongback and a moveable bucket of an overhead stowage bin assembly. A need exists for a compact and effective system and method for electrically coupling components of an overhead stowage bin assembly together.

With those needs in mind, certain embodiments of the present disclosure provide a vehicle that includes an internal cabin, and a system for wirelessly transmitting electrical signals between a first component and a second component within the internal cabin. The system includes a first circuit including a first coil secured to the first component. The first coil is electrically connected to one or both of a power source or a data source onboard the vehicle. A second circuit including a second coil is secured to the second component. The second coil is electrically connected to an electrical device (such as one or more of an electric latch, an electric lock, a speaker, a lighting assembly, monitor, a fan, or the like) secured to the second component. The first circuit is separated from the second circuit by a gap. The first coil is configured to receive one or more electrical signals from the power source and/or the data source. The electrical signal(s) are induced in the second coil by the first coil and transmitted to the electrical device.

In at least one embodiment, the first component includes a strongback of an overhead stowage bin assembly, and the second component includes a bucket that is pivotally coupled to the strongback. The bucket may be pivotally coupled to the strongback at a pivot interface. The first and second coils may be positioned around a circumference of at least a portion of the pivot interface. In at least one embodiment,

the pivot interface pivotally couples a fixed panel of the strongback to an end panel of the bucket.

The power source generates a first electrical signal as a power signal that is configured to provide power to the electrical device. The data source outputs a second electrical signal as a data signal that is configured to control at least one aspect of the electrical device.

The first circuit may include one or more first leads that electrically connect the first coil to one or both of the power source or the data source. The second circuit may include one or more second leads that electrically connect the second coil to the electrical device.

In at least one embodiment, the first coil mirrors the second coil. The first coil may be coaxial with the second coil. In at least one embodiment, the first coil is embedded within the first component, and the second coil is embedded within the second component.

Certain embodiments of the present disclosure provide a method of wirelessly transmitting electrical signals between a first component and a second component within an internal cabin of a vehicle. The method includes securing a first coil of a first circuit to the first component, electrically connecting the first coil to one or both of a power source or a data source onboard the vehicle, securing a second coil of a second circuit to the second component, electrically connecting the second coil to an electrical device secured to the second component, connecting the first component to the second component (in which the connecting includes separating the first circuit from the second circuit by a gap), generating one or more electrical signals with one or both of the power source or the data source, receiving the electrical signal(s) generated by the power source and/or the data source at the first coil, inducing the electrical signal(s) in the second coil due to the receiving, and transmitting the electrical signal(s) induced in the second coil to the electrical device.

BRIEF DESCRIPTION OF THE DRAWINGS

Figure **1** is a diagrammatic representation of a top perspective view of an aircraft, *according to an embodiment of the present disclosure.*

Figure **2**A is a diagrammatic representation of a top plan view of an internal cabin of an aircraft, according to an embodiment of the present disclosure.

Figure **2**B is a diagrammatic representation of a top plan view of an internal cabin of an aircraft, according to an embodiment of the present disclosure.

Figure **3** is a diagrammatic representation of an interior perspective view of an internal cabin of an aircraft, according to an embodiment of the present disclosure.

Figure **4** is a diagrammatic representation of a front perspective view of a stowage bin assembly in a closed position within an internal cabin, according to an embodiment of the present disclosure.

Figure **5** is a diagrammatic representation of a front perspective view of a stowage bin assembly in an open position within an internal cabin, according to an embodiment of the present disclosure.

Figure **6** is a schematic block diagram of a stowage bin assembly, according to an embodiment of the present disclosure.

Figure **7** is a diagrammatic representation of an interior perspective view of an end panel of a bucket of a stowage bin assembly, according to an embodiment of the present disclosure.

Figure **8** is a diagrammatic representation of an interior perspective view of a fixed panel of a stowage bin assembly, according to an embodiment of the present disclosure.

Figure **9** is a diagrammatic representation of an interior perspective view of an end panel of a bucket of a stowage bin assembly pivotally coupled to a fixed panel, according to an embodiment of the present disclosure.

Figure **10** is a diagrammatic representation of an interior lateral view of an end panel of a bucket of a stowage bin assembly pivotally coupled to a fixed panel, according to an embodiment of the present disclosure.

Figure **11** is a diagrammatic representation of a perspective front view of gap between an end panel of a bucket of a stowage bin assembly and a fixed panel, according to an embodiment of the present disclosure.

Figure **12** illustrates a flow chart of a method of wirelessly transmitting electrical signals from a first component to a second component, according to an embodiment of the present disclosure.

DETAILED DESCRIPTION OF THE DISCLOSURE

The foregoing summary, as well as the following detailed description of certain embodiments will be better understood when read in conjunction with the appended drawings. As used herein, an element or step recited in the singular and preceded by the word "a" or "an" should be understood as not necessarily excluding the plural of the elements or steps. Further, references to "one embodiment" are not intended to be interpreted as excluding the existence of additional embodiments that also incorporate the recited features. Moreover, unless explicitly stated to the contrary, embodiments "comprising" or "having" an element or a plurality of elements having a particular property may include additional elements not having that property.

Certain embodiments of the present disclosure provide a system and method for transferring electrical signals (such as power and data signals) between first and second components, such as a strongback and a bucket of an overhead stowage bin assembly within a vehicle. Embodiments of the present disclosure are configured to effectively and efficiently electrically couple the two components together, and are

particularly well-suited for assemblies in which the components are within confined spaces in which standard electrical connectors are difficult, if not impossible, to be positioned. Embodiments of the present disclosure provide systems and methods for electrically coupling two components together that replace standard wired connectors that would otherwise be difficult, if not impossible, to be positioned, and awkward to install.

Embodiments of the present disclosure provide electrical coupling systems and methods that replace standard plug and receptacle connectors and/or wired connections. The systems may include first and second circuits that may be mounted on and/or embedded within first and second components, such as panels of a strongback and bucket of an overhead stowage bin assembly.

Certain embodiments of the present disclosure provide systems and methods that are configured to replace electrical and data connectors with more flexible wireless couplings. The systems and methods are configured to transmit electrical signals through coils located in an overhead stowage bin assembly, for example. An inductive distance between the coils may be varied through a change in voltage, current, electronic components (resistors, capacitors, and the like) in the circuit, and/or by changing the characteristics of the coils (wire gage, number of windings, coil size, shape, material, and/or the like).

A first coil may be mounted on a first component, such as a fixed strongback, while a second coil may be mounted on a second component, such as a pivot bin or bucket that is pivotally mounted to the strongback. The first coil is coupled to a power source, such as a main source of electrical power within an aircraft, one or more batteries, and/or the like. The second coil is coupled to an electrical device that is mounted on or within the second component. The electrical device may be an electronic lock, a speaker, a lighting assembly, a display (such as a digital display or monitor), and/or the like. Electrical signals are transferred between the first and second coils. The electrical signals may be power signals or data signals. The power signals are used to provide power to the electrical device. The data signals may be transmitted via

radio frequency, WiFi, or the like, and may include lock status and control data for latches, light control data (color, on/off, brightness), specific bin number, video/sound data, and/or the like.

Figure **1** is a diagrammatic representation of a top perspective view of a vehicle, such as an aircraft **10** (or aircraft assembly), according to an embodiment of the present disclosure. The aircraft **10** includes a propulsion system **12** that may include two turbofan engines **14**, for example. Optionally, the propulsion system **12** may include more engines **14** than shown. The engines **14** are carried by wings **16** of the aircraft **10**. In other embodiments, the engines **14** may be carried by a fuselage **18** and/or an empennage **20**. The empennage **20** may also support horizontal stabilizers **22** and a vertical stabilizer **24**.

The fuselage **18** of the aircraft **10** defines an internal cabin, which may include a cockpit, one or more work sections (for example, galleys, personnel carry-on baggage areas, and the like), one or more passenger sections (for example, first class, business class, and coach sections), and an aft section. Each of the sections may be separated by a cabin transition area, which may include one or more class divider assemblies. Overhead stowage bin assemblies may be positioned throughout the internal cabin.

Alternatively, instead of an aircraft, embodiments of the present disclosure may be used with various other vehicles, such as automobiles, buses, locomotives and train cars, seacraft, spacecraft, and the like.

Figure **2**A is a diagrammatic representation of a top plan view of an internal cabin **30** of an aircraft, according to an embodiment of the present disclosure. The internal cabin **30** may be within a fuselage **32** of the aircraft. For example, one or more fuselage walls may define the internal cabin **30**. The internal cabin **30** includes multiple sections, including a front section **33**, a first class section **34**, a business class section **36**, a front galley station **38**, an expanded economy or coach section **40**, a standard economy or coach section **42**, and an aft section **44**, which may include multiple lavatories and galley stations. It is to be understood that the internal cabin **30**

may include more or less sections than shown. For example, the internal cabin **30** may not include a first class section, and may include more or less galley stations than shown. Each of the sections may be separated by a cabin transition area **46**, which may include class divider assemblies between aisles **48**.

As shown in Figure **2**A, the internal cabin **30** includes two aisles **50** and **52** that lead to the aft section **44**. Optionally, the internal cabin **30** may have less or more aisles than shown. For example, the internal cabin **30** may include a single aisle that extends through the center of the internal cabin **30** that leads to the aft section **44**.

Figure **2**B is a diagrammatic representation of a top plan view of an internal cabin **80** of an aircraft, according to an embodiment of the present disclosure. The internal cabin **80** may be within a fuselage **81** of the aircraft. For example, one or more fuselage walls may define the internal cabin **80**. The internal cabin **80** includes multiple sections, including a main cabin **82** having passenger seats **83**, and an aft section **85** behind the main cabin **82**. It is to be understood that the internal cabin **80** may include more or less sections than shown.

The internal cabin **80** may include a single aisle **84** that leads to the aft section **85**. The single aisle **84** may extend through the center of the internal cabin **80** that leads to the aft section **85**. For example, the single aisle **84** may be coaxially aligned with a central longitudinal plane **86** of the internal cabin **80**.

Figure **3** is a diagrammatic representation of an interior perspective view of an internal cabin **100** of an aircraft, according to an embodiment of the present disclosure. The internal cabin **100** includes outboard walls **102** connected to a ceiling **104**. Windows **106** may be formed within the outboard walls **102**. A floor **108** supports rows of seats **110**. As shown in Figure **3**, a row **112** may include two seats **110** on either side of an aisle **113**. However, the row **112** may include more or less seats **110** than shown. Additionally, the internal cabin **100** may include more aisles than shown.

Passenger service units (PSUs) **114** are secured between an outboard wall **102** and the ceiling **104** on either side of the aisle **113**. The PSUs **114** extend between a front

end and rear end of the internal cabin **100**. For example, a PSU **114** may be positioned over each seat **110** within a row **112**. Each PSU **114** may include a housing **116** that generally contains vents, reading lights, an oxygen bag drop panel, an attendant request button, and other such controls over each seat **110** (or groups of seats) within a row **112**.

Overhead stowage bin assemblies **118** are secured to the ceiling **104** and/or the outboard wall **102** above and inboard from the PSU **114** on either side of the aisle **113**. The overhead stowage bin assemblies **118** are secured over the seats **110**. The overhead stowage bin assemblies **118** extend between the front and rear end of the internal cabin **100**. Each stowage bin assembly **118** may include a pivot bin or bucket **120** pivotally secured to a strongback (hidden from view in Figure **3**). The overhead stowage bin assemblies **118** may be positioned above and inboard from lower surfaces of the PSUs **114**. The overhead stowage bin assemblies **118** are configured to be pivoted open in order to receive passenger carry-on baggage and personal items, for example.

As used herein, the term "outboard" means a position that is further away from a central longitudinal plane **122** of the internal cabin **100** as compared to another component. The term "inboard" means a position that is closer to the central longitudinal plane **122** of the internal cabin **100** as compared to another component. For example, a lower surface of a PSU **114** may be outboard in relation to a stowage bin assembly **118**.

A gap **124** may extend along a length of the internal cabin **100** between the PSUs **114** and the stowage bin assemblies **118** on each side of the aisle **113**. The gap **124** allows the pivot bins **120** of the stowage bins **118** to be pivoted between open and closed positions.

Electrical devices **125** may be mounted on the buckets **120** of the stowage bin assemblies **118**. As shown, the electrical devices **125** may be secured to exterior surfaces of the buckets **120**. Optionally, the electrical devices **125** may be secured to interior surfaces of the buckets **120**. In at least one embodiment, the electrical

devices **125** may be embedded within the buckets **120**. The electrical device **125** may be one or more of an electric latch or lock, a speaker, a lighting assembly (such as one or more light emitting diodes), a monitor (such as a video screen and/or touchscreen), a fan, and/or the like.

Figure **4** is a diagrammatic representation of a front perspective view of a stowage bin assembly **118** in a closed position within the internal cabin **100**, according to an embodiment of the present disclosure. The stowage bin assembly **118** includes a bucket **120** having a front panel **126** connected to forward and aft end panels (hidden from view in Figure **4**). As shown, the front panel **126** may be an arcuate panel having a curved outer surface that curves downwardly toward the outboard wall **102**. As such, a top portion **128** of the front panel **126** is inboard in relation to a lower portion **130**. The electrical device **125** may be secured to and/or embedded within the front panel **126**.

Figure **5** is a diagrammatic representation of a front perspective view of the stowage bin assembly **118** in an open position within the internal cabin **100**, according to an embodiment of the present disclosure. As shown, the front panel **126** is secured to a forward end panel **132** and an aft end panel **134**, which may generally be opposed and parallel to one another. The front panel **126** and the end panels **132** and **134** may also connect to a bottom panel **136**. The bottom panel **136** may be an inwardly curved portion of the front panel **126**, for example. A closeout bracket **138** may span between the end panels **132** and **134** and provide a rigid bracing support therebetween. The front panel **126** may be thicker than the end panels **132** and **134**, as the front panel **126** is configured to directly support a weight of overhead bags. As such, the front panel **126** may have increased thickness in order to provide additional support strength and rigidity.

A baggage retaining chamber **140** is defined between the front panel **126**, the end panels **132** and **134**, and the bottom panel **136**. The baggage retaining chamber **140** is configured to receive baggage **142** when the stowage bin assembly **118** is in the open position.

The end panels **132** and **134** are each pivotally secured to fixed panels **144**, such as fixed panels of a strongback. That is, the fixed panels **144** may be part of a strongback within the internal cabin **100**.

Figure **6** is a schematic block diagram of the stowage bin assembly **118**, according to an embodiment of the present disclosure. Note, Figure **6** illustrates a general overview of the stowage bin assembly **118**, and is not drawn to scale. Moreover, for the sake of clarity, the fixed panel **144** and the end panel **132** are shown in an open face manner (as opposed to an actual end-to-end manner, as shown in Figure **11**) in order to clearly show certain components.

Figure **6** illustrates a system **156** for wirelessly transmitting electrical signals between first and second components of the stowage bin assembly **118** within an internal cabin of a vehicle. For example, the first component may be a strongback, which may include the fixed panel **144**, while the second component may be the pivotal bucket **120**, which may include the end panels **132** and **134** (only the end panel **132** is shown in Figure **6**), as described above.

In at least one embodiment, the stowage bin assembly **118** includes the fixed panel **144**, such as a portion of a strong back, and the bucket **120**. An end panel **132** (or **134**) pivotally couples to the fixed panel through a pivot interface. The pivot interface includes a pivot pin **150** extending inwardly from the fixed panel **144**, and a reciprocal pivot channel **152** that receives the pivot pin **150** on the end panel **132**. Optionally, the end panel **132** may include an outwardly-extending pivot pin, while the fixed panel **144** includes a reciprocal pivot channel. When the pivot pin **150** is coupled into the pivot channel **152**, the fixed panel **144** is separated from the end panel **132** by a separation gap **154**, such as **1-2** millimeters (mm), which may be too small to accommodate standard electrical connectors. Optionally, the gap **154** may be greater or less than **1-2** mm.

A first or transmission circuit **160** is coupled to the fixed panel **144**. The transmission circuit **160** may be a tank circuit including at least one capacitor. The transmission circuit **160** includes a first or transmission coil **162** surrounding a cross-sectional

circumference of the pivot pin **150**. The transmission coil **162** includes one or more conductive coils or windings, which may be formed of copper, for example. The transmission coil **162** is electrically connected to one or more leads **164** (such as electrical traces, wires, or the like) that connect to a power source **166**, such as a source of electrical power onboard a vehicle, one or more batteries, and/or the like. Additionally, or alternatively, the transmission coil **162** may be electrically connected to a data source **167** (such as a computer onboard an aircraft) through the leads **164**. The transmission coil **162** and the leads **164** may be securely mounted on the fixed panel **144**. Optionally, the transmission coil **162** and the leads **164** may be embedded within the fixed panel **144**.

The power source **166** generates a first electrical signal as a power signal that is configured to provide power to the electrical device **125**. The data source **167** outputs a second electrical signal as a data signal that is configured to control at least one aspect of the electrical device **125**. For example, the data signal may control activation/deactivation of the electrical device, intensity (such as illumination intensity of a lighting assembly, volume of a speaker, and/or the like), duration of activation, text, video, or other such graphic messages, and/or the like.

A second or drawing circuit **168** is coupled to the end panel **132** of the bucket **120**. The drawing circuit **168** may also be a tank circuit including at least one capacitor. The drawing circuit **168** includes a second or reception coil **170** surrounding a cross-sectional circumference of the pivot channel **152**. The reception coil **170** includes one more conductive coils or windings, which may be formed of copper, for example. The reception coil **170** and the transmission coil **162** may be formed of the same material, and may have the same number of coils or windings. The reception coil **170** is electrically connected to one or more leads **172** (such as electrical traces, wires, or the like) that connect to the electrical device **125**. The reception coil **170** and the leads **172** may be securely mounted to the end panel **132**. Optionally, the reception coil **170** and the leads **172** may be embedded within the end panel **132**.

Alternatively, the transmission coil **162** may be secured to the end panel **132**, while the reception coil **170** may be secured to the fixed panel **144**. In at least one other embodiment, the transmission coil **162** and/or the reception coil **170** may be secured to various other structures, such as a ceiling or wall panel within an internal cabin. As such, the transmission coil **162** may be secured to a first component, such as a first portion of the stowage bin assembly **118**, a ceiling panel, a wall panel, and/or the like, while the reception coil **170** may be secured to a second component, such as a second portion of the stowage bin assembly **118**, a ceiling panel, a wall panel, and/or the like. The first and second components are connected together, and may have wall portions that are separated by a gap, such as the gap **154**.

When the end panel **132** is pivotally coupled to the fixed panel **144** by way of the pivot pin **150** being pivotally retained within the pivot channel **152**, the transmission coil **162** is coaxial with the reception coil **170**. The transmission coil **162** and the reception coil **170** may mirror one another. As noted above, both the transmission coil **162** and the reception coil **170** may be formed of the same material, and have the same number of coils or windings. The transmission coil **162** and the reception coil **170** may be identically (or substantially identically) formed.

In operation, in order to supply electrical signals (such as power signals from the power source **166** or data signals from the data source **167**) to the electrical device **125**, an electrical signal is provided to the transmission coil **162** from the power source **166** via the leads **164**. For example, the power source **166** may generate an electrical signal as a power signal that is configured to provide power to the electrical device **125**, or the data source **167** may output an electrical signal as a data control signal that is configured to control at least one aspect of the electrical device **125**. Because the transmission coil **162** is electrically connected to the power source **166** and/or the data source **167** (such as via the leads **164**), the electrical signals generated by the power source **166** and/or the data source **167** are directly received by the transmission coil **162**.

As an electrical signal is provided to the transmission coil **162** by the power source **166** and/or the data source **167**, the transmission coil **162** resonates at a particular frequency, and generates a magnetic field. While the reception coil **170** is separated from the transmission coil **162** by the gap **154** (that is, the reception coil **170** is not directly mechanically coupled to the transmission coil **162**), the reception coil **170** is within the magnetic field generated by the transmission coil **162**. As the reception coil **170** is subjected to the generated magnetic field, the electrical signal is induced in the reception coil **170** (for example, the reception coil **170** converts the generated magnetic field into a corresponding electrical signal). The induced electrical signal is then supplied to the electrical device **125** via the leads **168**.

The electrical signal is efficiently and optimally transmitted to the reception coil **170** through the resonance of the transmission coil **162** because the transmission coil **162** and the reception coil **170** may be identically formed and axially aligned with one another (and therefore resonate at the same or similar frequencies). Alternatively, the reception coil **170** may differ from the reception coil **170** with respect to the number of coils or windings, material, and/or the like; although differences therebetween may affect the efficiency of signal transmission and reception.

Figure **7** is a diagrammatic representation of an interior perspective view of the end panel **132** of the bucket of the stowage bin assembly **118**, according to an embodiment of the present disclosure. The pivot pin **150** of the fixed panel **144** (shown in Figure **6**) is pivotally retained within the pivot channel **152** formed through the end panel **132** of the bucket **120**.

The reception coil **170** and the leads **168**a and **168**b may be mounted on a substrate **180**, such as a circuit board, paper, a surface of the end panel **132**, and/or the like. Optionally, the reception coil **170** and the leads **168** may be embedded within the end panel **132**.

The reception coil **170** has a plurality of windings **182**. As shown, the reception coil **170** may have five windings that surround an outer circumference of the pivot channel **152**. Optionally, the reception coil **170** may include more or less windings **182** than

shown. One end **184** of the reception coil **170** connects to a lead **168**a, while an opposite end **186** of the reception coil **170** connects to a lead **168**b.

The reception coil **170** is positioned around the pivot pin **150** and the pivot channel **152**, but may be separated therefrom. That is, the reception coil **170** may be routed around and separated from the pivot pin **150** and the pivot channel **152** so as not to interfere with pivotal motion of the bucket **120** relative to the fixed panel **144** (shown in Figure **6**).

Figure **8** is a diagrammatic representation of an interior perspective view of the fixed panel **144** of the stowage bin assembly **118**, according to an embodiment of the present disclosure. The pivot pin **150** inwardly extends from the fixed panel **144**.

The transmission coil **162** and the leads **164**a and **164**b may be mounted on a substrate **190**, such as a circuit board, paper, a surface of the fixed panel **144**, and/or the like. Optionally, the transmission coil **162** and the leads **164**a and **164**b may be embedded within the fixed panel **144**.

The transmission coil **162** has a plurality of windings **192**. As shown, the transmission coil **162** may have five windings that surround an outer circumference of the pivot pin **150**. Optionally, the transmission coil **162** may include more or less windings **192** than shown. One end **194** of the transmission coil **162** connects to a lead **164**a, while an opposite end **196** of the transmission coil **162** connects to a lead **164**b.

The transmission coil **162** is positioned around the pivot pin **150**, but may be separated therefrom. That is, the transmission coil **162** may be routed around and separated from the pivot pin **150** so as not to interfere with pivotal motion of the bucket **120** (shown in Figures **6** and **7**) relative to the fixed panel **144**.

Figure **9** is a diagrammatic representation of an interior perspective view of the end panel **132** of the bucket **120** pivotally coupled to the fixed panel **144**, according to an embodiment of the present disclosure. Figure **10** is a diagrammatic representation of an interior lateral view of the end panel **132** of the bucket **120** pivotally coupled to the

fixed panel **144**. Referring to Figures **9** and **10**, when the end panel **132** is pivotally coupled to the fixed panel **144**, the transmission coil **162** and the reception coil **170** are coaxial (that is, both share the same longitudinal axis **200**). In particular, the transmission coil **162** and the reception coil **170** are coaxially aligned with respect to the longitudinal axis **200** of the pivot pin **150**. Because the transmission coil **162** and the reception coil **170** mirror one another, when the bucket **120** rotates with respect to the fixed panel **144** about the pivot interface between the pivot pin **150** and the pivot channel **152**, the transmission coil **162** and the reception coil **170** remain axially aligned (in that outer and inner windings of the coils **162** and **170** do not axially shift with respect to one another). Through an entire range of pivotal motion of the bucket **120** with respect to the fixed panel **144**, the transmission coil **162** and the reception coil **170** remain axially in line with another, thereby allowing for efficient transmission of electrical signals (such as power and/or data signal) therebetween. Stated differently, as the bucket **120** pivots through a range of motion with respect to the fixed panel **144**, the transmission coil **162** remains axially aligned with respect to the reception coil **170**, thereby maintaining a stable and robust electrical coupling therebetween.

As shown and described, electrical signals may be transmitted between the transmission coil **162** and the reception coil **170** without the use of a mechanical plug and receptacle. As such, the assembly and installation process is streamlined, as separate and distinct connections between the bucket **120** and the fixed panel **144** are not necessary. Further, the stowage bin assembly **118** is made lighter, in that additional wires and connectors are not used.

Each of the coils **162** and **170** may include or be coupled to one or more radio frequency identification (RFID) chips, windings, or the like. The RFID chips or coils **162** and **170** allow for electrical signals in the form of data signals to be transferred between the coils **162** and **170**.

Figure **11** is a diagrammatic representation of a perspective front view of the gap **154** between the end panel **132** of the bucket **120** and the fixed panel **144**, according to

an embodiment of the present disclosure. The transmission coil **162** is axially aligned with the reception coil **170**, but both are separated from one another by the gap **154**, which may be **1-2** mm. Optionally, the gap **154** may be greater or less than **1-2** mm. As shown, no wiring or connector extends into the gap **154**. The circuits **160** and **168** provide an electrical coupling therebetween, and may be positioned in tight spaces (such as within the gap **154**) that may be too small to accommodate conventional wires and connectors.

Figure **12** illustrates a flow chart of a method of wirelessly transmitting electrical signals from a first component to a second component, according to an embodiment of the present disclosure. The first component may be a first portion of an overhead stowage bin assembly, such as a fixed panel of a strongback, while the second component may be a second portion of the overhead stowage bin assembly, such as a pivot bucket that is pivotally coupled to the fixed panel. In at least one other embodiment, the first and/or second components may be or include a portion of a stowage bin assembly, a wall panel, a ceiling panel, a monument (such as galley station, or a lavatory), or the like within an internal cabin of a vehicle.

The method begins at **300**, at which the first component is securely mounted to the second component so that a transmission coil of the first component is axially aligned with a reception coil of the second component. At **302**, the transmission coil is electrically connected to a power source and/or a data source. At **304**, the reception coil is electrically connected to an electrical device on or within the second component. **302** and **304** may occur at the same time and/or overlap in time. Optionally, **302** may occur before **304**, or vice versa.

At **306**, one or more electrical signals are supplied to the transmission coil via the power source and/or the data source. The electrical signals may be power signals (as supplied from the power source) and/or data signals (as supplied from a data source, such as a computer onboard a vehicle). The power source **166** (shown in Figure **6**) generates a first electrical signal as a power signal that is configured to provide power to the electrical device **125** (shown in Figure **6**). The data source **167** (such as a

computer) outputs a second electrical signal as a data signal that is configured to control at least one aspect of the electrical device **125**. For example, the data signal may control activation/deactivation of the electrical device, intensity (such as illumination intensity of a lighting assembly, volume of a speaker, and/or the like), duration of activation, and/or the like.

The electrical signals supplied to the transmission coil cause it to resonate and generate a magnetic field. The reception coil, which is separated from the transmission coil by a gap, is nevertheless within the generated magnetic field, and, as such, at **308** the electrical signal is induced in the reception coil (for example, converting the generated magnetic field into the electrical signal(s)). At **310**, the induced electrical signal(s) in the reception coil is then transferred to the electrical device, thereby powering the electrical device, and/or supplying data (for example, control data) thereto.

Referring to Figures **1-12**, embodiments of the present disclosure provide systems and methods for transferring electrical signals (such as power signals and/or data signals) between two components, such as portions of an overhead stowage bin assembly, ceiling panels, wall panels, and/or the like. Embodiments of the present disclosure are ideally suited for areas in which space is confined or otherwise limited. The gap **154** between the components may be varied depending on applied voltage, current, electronic components (for example, resistors and capacitors) within the circuits **160** and **168**, and/or through variations in the coils **162** and **170** (such as different wire gage, number of windings, coil size, shape, and/or the like).

As described above, embodiments of the present disclosure provide efficient systems and methods for transferring electrical signals between a first component, such as a strongback, and a second component, such as a moveable bucket, of an overhead stowage bin assembly. Embodiments of the present disclosure provide compact and effective systems and methods for electrically coupling components of an overhead stowage bin assembly together.

While various spatial and directional terms, such as top, bottom, lower, mid, lateral, horizontal, vertical, front and the like may be used to describe embodiments of the present disclosure, it is understood that such terms are merely used with respect to the orientations shown in the drawings. The orientations may be inverted, rotated, or otherwise changed, such that an upper portion is a lower portion, and vice versa, horizontal becomes vertical, and the like.

As used herein, a structure, limitation, or element that is "configured to" perform a task or operation is particularly structurally formed, constructed, or adapted in a manner corresponding to the task or operation. For purposes of clarity and the avoidance of doubt, an object that is merely capable of being modified to perform the task or operation is not "configured to" perform the task or operation as used herein.

It is to be understood that the above description is intended to be illustrative, and not restrictive. For example, the above-described embodiments (and/or aspects thereof) may be used in combination with each other. In addition, many modifications may be made to adapt a particular situation or material to the teachings of the various embodiments of the disclosure without departing from their scope. While the dimensions and types of materials described herein are intended to define the parameters of the various embodiments of the disclosure, the embodiments are by no means limiting and are exemplary embodiments. Many other embodiments will be apparent to those of skill in the art upon reviewing the above description. The scope of the various embodiments of the disclosure should, therefore, be determined with reference to the appended claims, along with the full scope of equivalents to which such claims are entitled. In the appended claims, the terms "including" and "in which" are used as the plain-English equivalents of the respective terms "comprising" and "wherein." Moreover, the terms "first," "second," and "third," etc. are used merely as labels, and are not intended to impose numerical requirements on their objects.

This written description uses examples to disclose the various embodiments of the disclosure, including the best mode, and also to enable any person skilled in the art to practice the various embodiments of the disclosure, including making and using any

devices or systems and performing any incorporated methods. The patentable scope of the various embodiments of the disclosure is defined by the claims, and may include other examples that occur to those skilled in the art. Such other examples are intended to be within the scope of the claims if the examples have structural elements that do not differ from the literal language of the claims, or if the examples include equivalent structural elements with insubstantial differences from the literal language of the claims.

EMBODIMENTS IN WHICH AN EXCLUSIVE PRIVILEGE OR PROPERTY IS CLAIMED ARE DEFINED AS FOLLOWS:

1. A vehicle comprising:

an internal cabin; and

a system for wirelessly transmitting electrical signals between a first component and a second component within the internal cabin, wherein the system comprises:

a first circuit including a first coil secured to the first component, wherein the first coil is electrically connected to one or both of a power source or a data source onboard the vehicle; and

a second circuit including a second coil secured to the second component, wherein the second coil is electrically connected to an electrical device secured to the second component, wherein the first circuit is separated from the second circuit by a gap, wherein the first coil is configured to receive one or more electrical signals from one or both of the power source or the data source, and wherein the one or more electrical signals are induced in the second coil by the first coil and transmitted to the electrical device.

2. The vehicle of claim **1**, wherein the first component comprises a strongback of an overhead stowage bin assembly, and wherein the second component comprises a bucket that is pivotally coupled to the strongback.

3. The vehicle of claim **2**, wherein the bucket is pivotally coupled to the strongback at a pivot interface, wherein the first and second coils are positioned around a circumference of at least a portion of the pivot interface.

4. The vehicle of claim **3**, wherein the pivot interface pivotally couples a fixed panel of the strongback to an end panel of the bucket.

5. The vehicle of any one of claims **1**-**4**, wherein the power source generates a first electrical signal as a power signal that is configured to provide power to the electrical device, and wherein the data source outputs a second electrical signal as a data signal that is configured to control at least one aspect of the electrical device.

6. The vehicle of any one of claims **1**-**5**, wherein the first circuit includes one or more first leads that electrically connect the first coil to one or both of the power source or the data source, and wherein the second circuit includes one or more second leads that electrically connect the second coil to the electrical device.

7. The vehicle of any one of claims **1**-**6**, wherein the first coil mirrors the second coil.

8. The vehicle of any one of claims **1**-**7**, wherein the first coil is coaxial with the second coil.

9. The vehicle of any one of claims **1**-**8**, wherein the first coil is embedded within the first component, and wherein the second coil is embedded within the second component.

10. A method of wirelessly transmitting electrical signals between a first component and a second component within an internal cabin of a vehicle, the method comprising:

securing a first coil of a first circuit to the first component;

electrically connecting the first coil to one or both of a power source or a data source onboard the vehicle;

securing a second coil of a second circuit to the second component;

electrically connecting the second coil to an electrical device secured to the second component;

connecting the first component to the second component, wherein the connecting includes separating the first circuit from the second circuit by a gap;

generating one or more electrical signals with one or both of the power source or the data source;

receiving the one or more electrical signals generated by the one or both of the power source or the data source at the first coil;

inducing the one or more electrical signals in the second coil due to the receiving; and

transmitting the one or more electrical signals induced in the second coil to the electrical device.

11. The method of claim **10**, wherein the first component comprises a strongback of an overhead stowage bin assembly, and wherein the second component comprises a bucket that is pivotally coupled to the strongback.

12. The method of claim **11**, further comprising:

pivotally coupling the bucket to the strongback at a pivot interface; and

positioning the first and second coils around a circumference of at least a portion of the pivot interface.

13. The method of any one of claims **10**-**12**, wherein the generating comprises:

using the power source to generate a first electrical signal as a power signal that is configured to provide power to the electrical device; and

using the data source to output a second electrical signal as a data signal that is configured to control at least one aspect of the electrical device.

14. The method of any one of claims **10**-**13**, wherein connecting the first component to the second component comprises mirroring the first coil with the second coil.

15. The method of any one of claims **10**-**14**, wherein the connecting the first component to the second component comprises coaxially coupling the first coil to the second coil.

16. The method of any one of claims **10**-**15**, wherein the securing the first coil comprises embedding the first coil within the first component, and wherein the securing the second coil comprises embedding the second coil within the second component.

17. An overhead stowage bin assembly configured to be positioned within an internal cabin of a vehicle, the overhead stowage bin assembly comprising:

a strongback;

a first circuit including a first coil embedded within the strongback and one or more first leads that electrically connect the first coil to one or both of a power source or a data source onboard the vehicle;

a bucket pivotally secured to the strong back, wherein the bucket is pivotally coupled to the strongback at a pivot interface; and

a second circuit including a second coil embedded within the bucket and one or more second leads that electrically connect the second coil to an electrical device secured to the bucket, wherein the first circuit is separated from the second circuit by a gap, wherein the first coil mirrors and is coaxial with the second coil, wherein the first and second coils

are positioned around a circumference of at least a portion of the pivot interface, wherein the first coil is configured to receive one or more electrical signals from one or both of the power source or the data source, and wherein the one or more electrical signals are induced in the second coil by the first coil and transmitted to the electrical device.

18. The overhead stowage bin assembly of claim **17**, wherein the pivot interface pivotally couples a fixed panel of the strongback to an end panel of the bucket.

19. The overhead stowage bin assembly of any one of claims **17-18**, wherein the power source generates a first electrical signal as a power signal that is configured to provide power to the electrical device, and wherein the data source outputs a second electrical signal as a data signal that is configured to control at least one aspect of the electrical device.

20. The overhead stowage bin assembly of any one of claims **17-19**, wherein the electrical device comprises one or more of an electric latch, an electric lock, a speaker, a lighting assembly, monitor, or a fan.

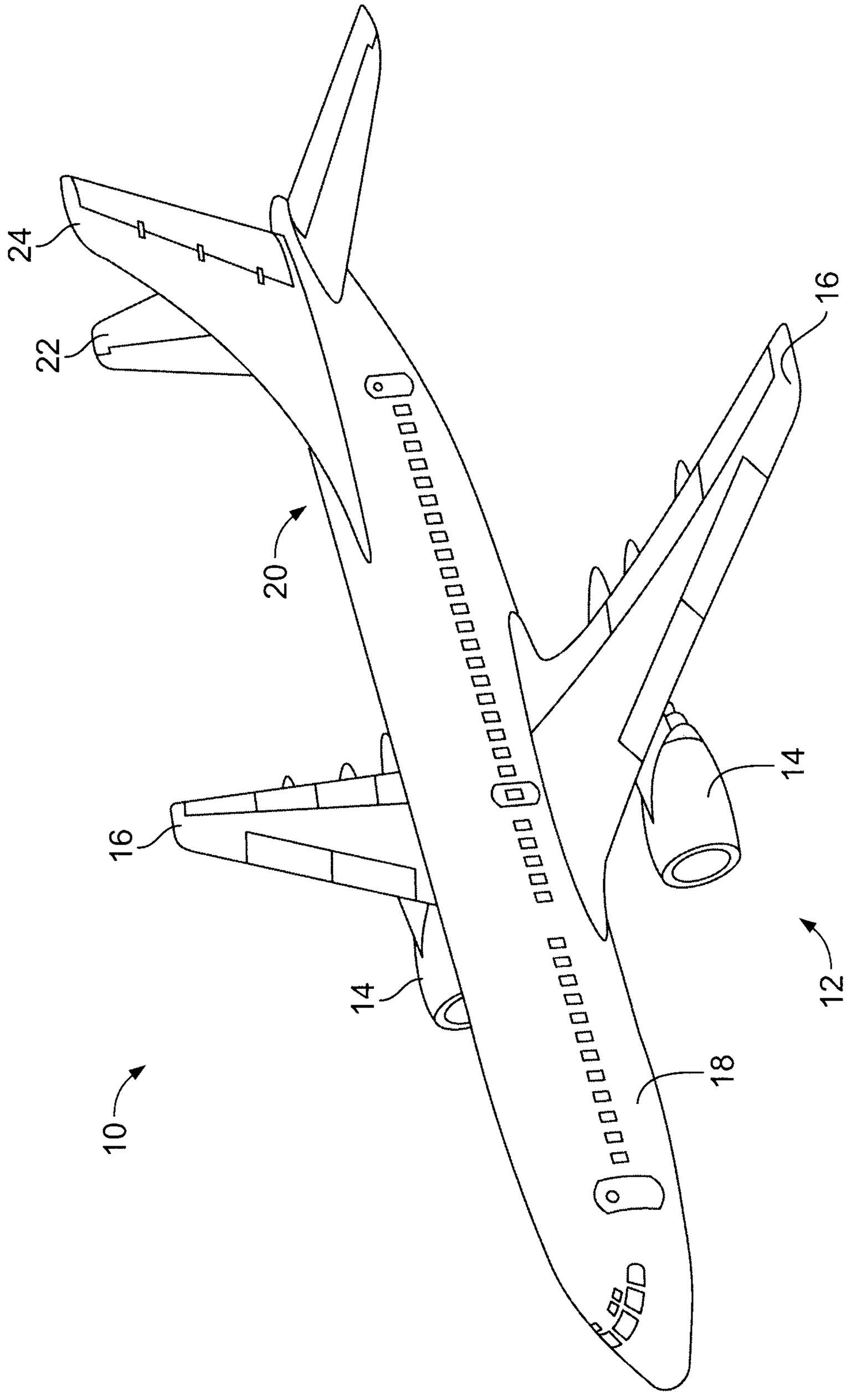

FIG. 1

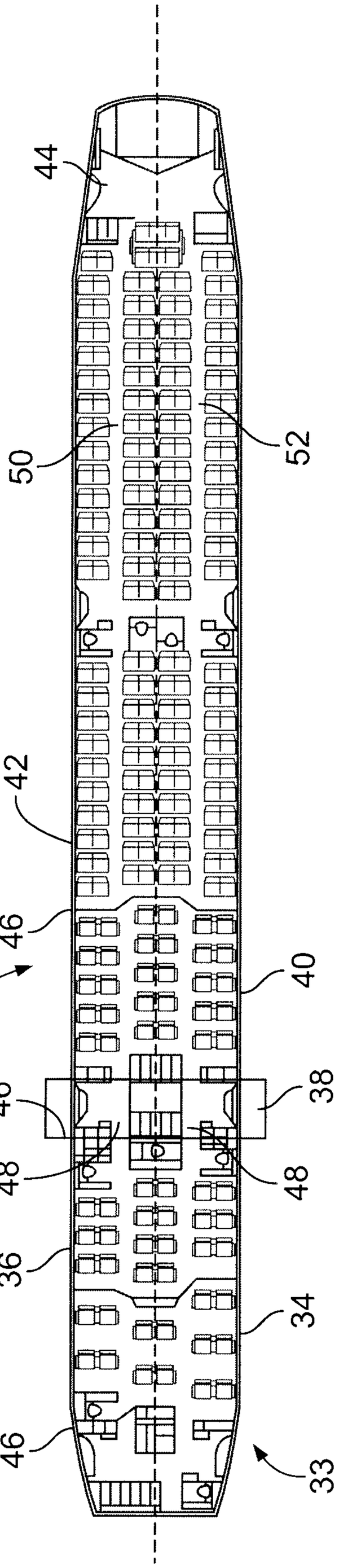

FIG. 2A

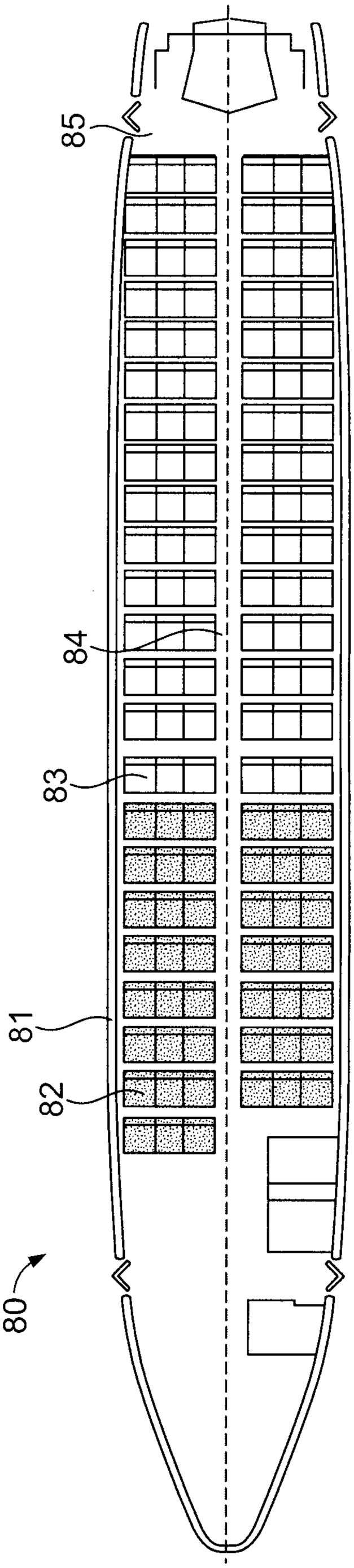

FIG. 2B

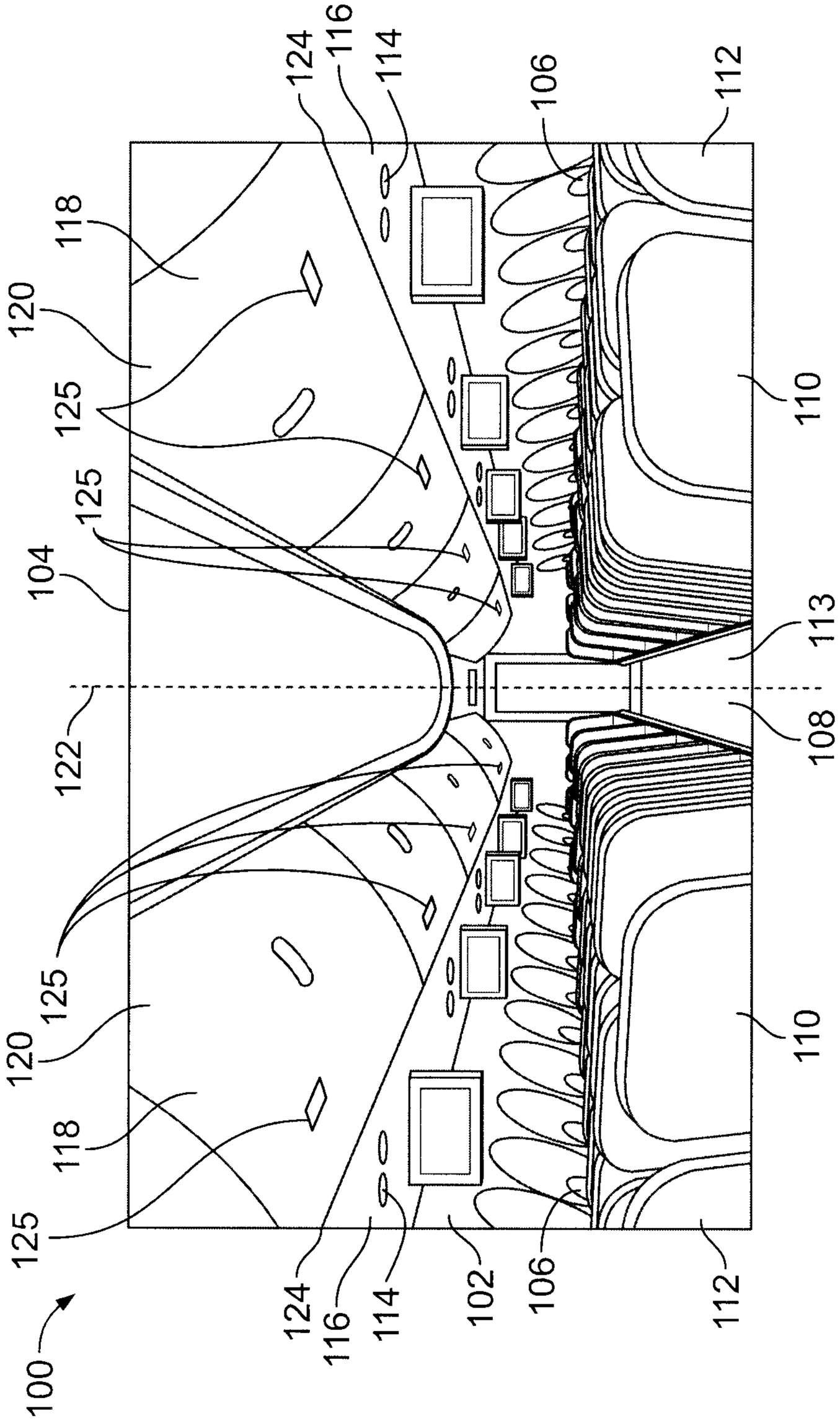
100
102
104
106
108
110
112
113
114
116
118
120
122
124
125
125
125
125
106
112
114
124
110
113
108
110
106
112
114
116
124
102
106
112

FIG. 3

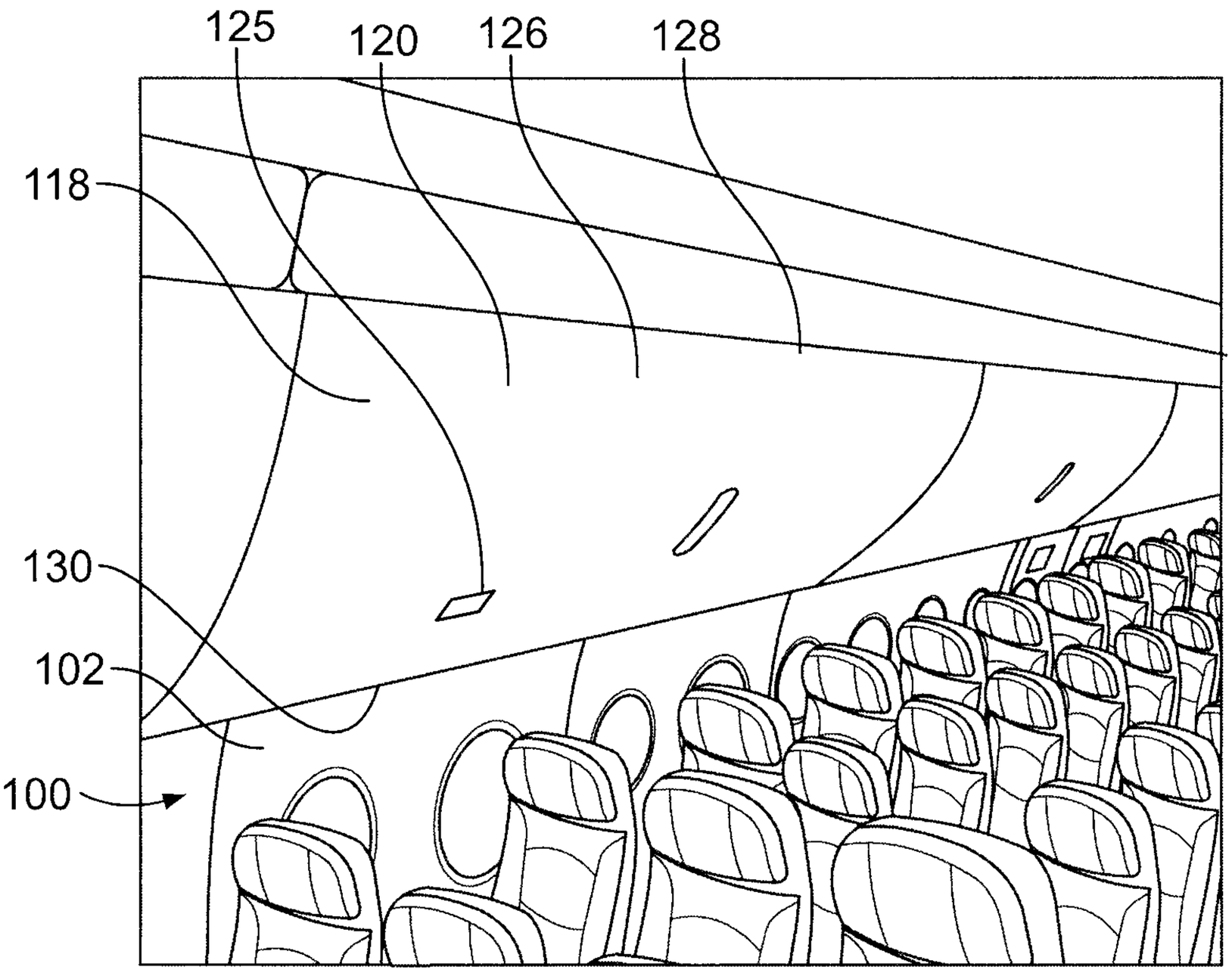
125
120
126
128
118
130
102
100

FIG. 4

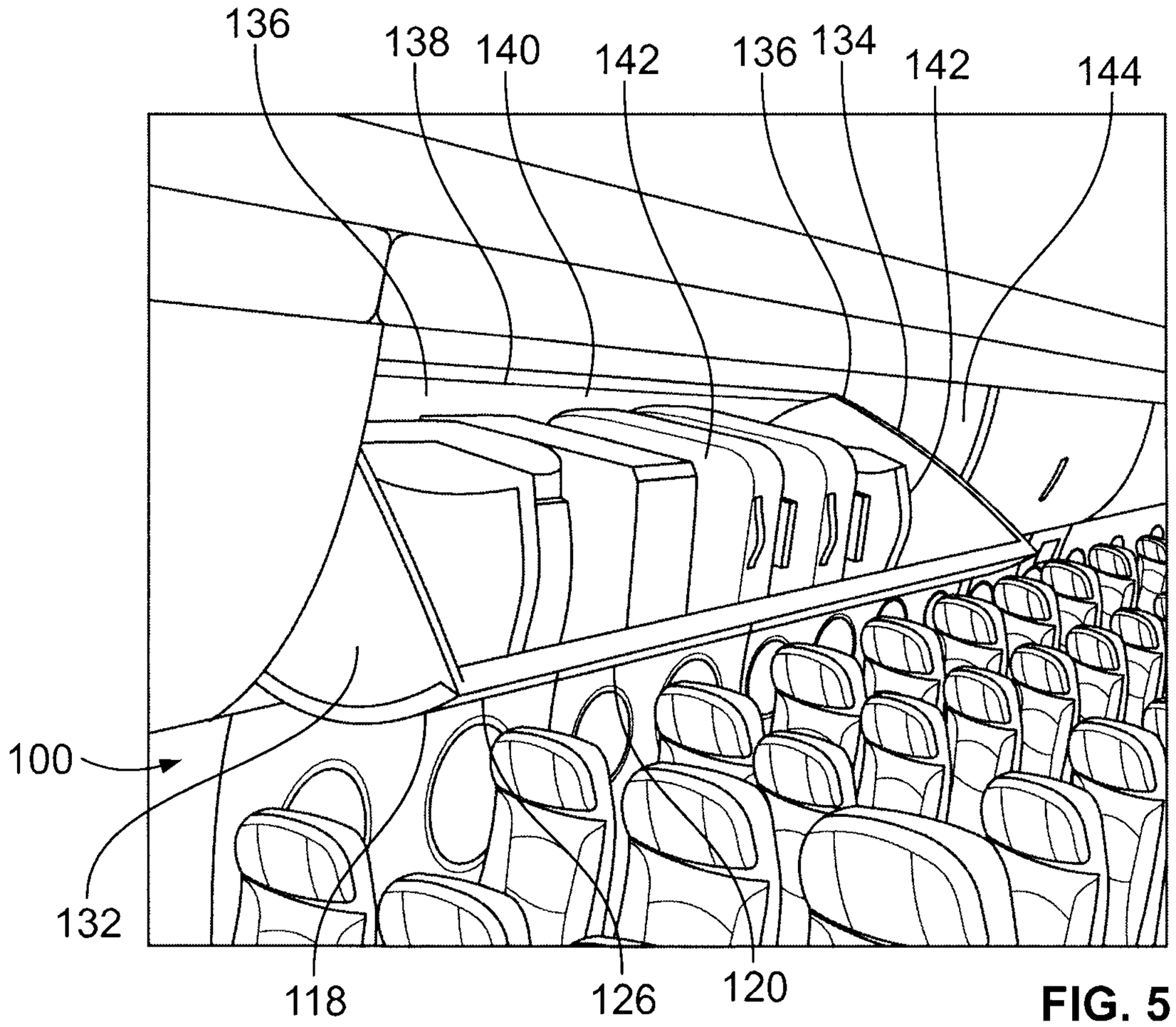
136
138
140
142
136
134
142
144
100
132
118
126
120

FIG. 5

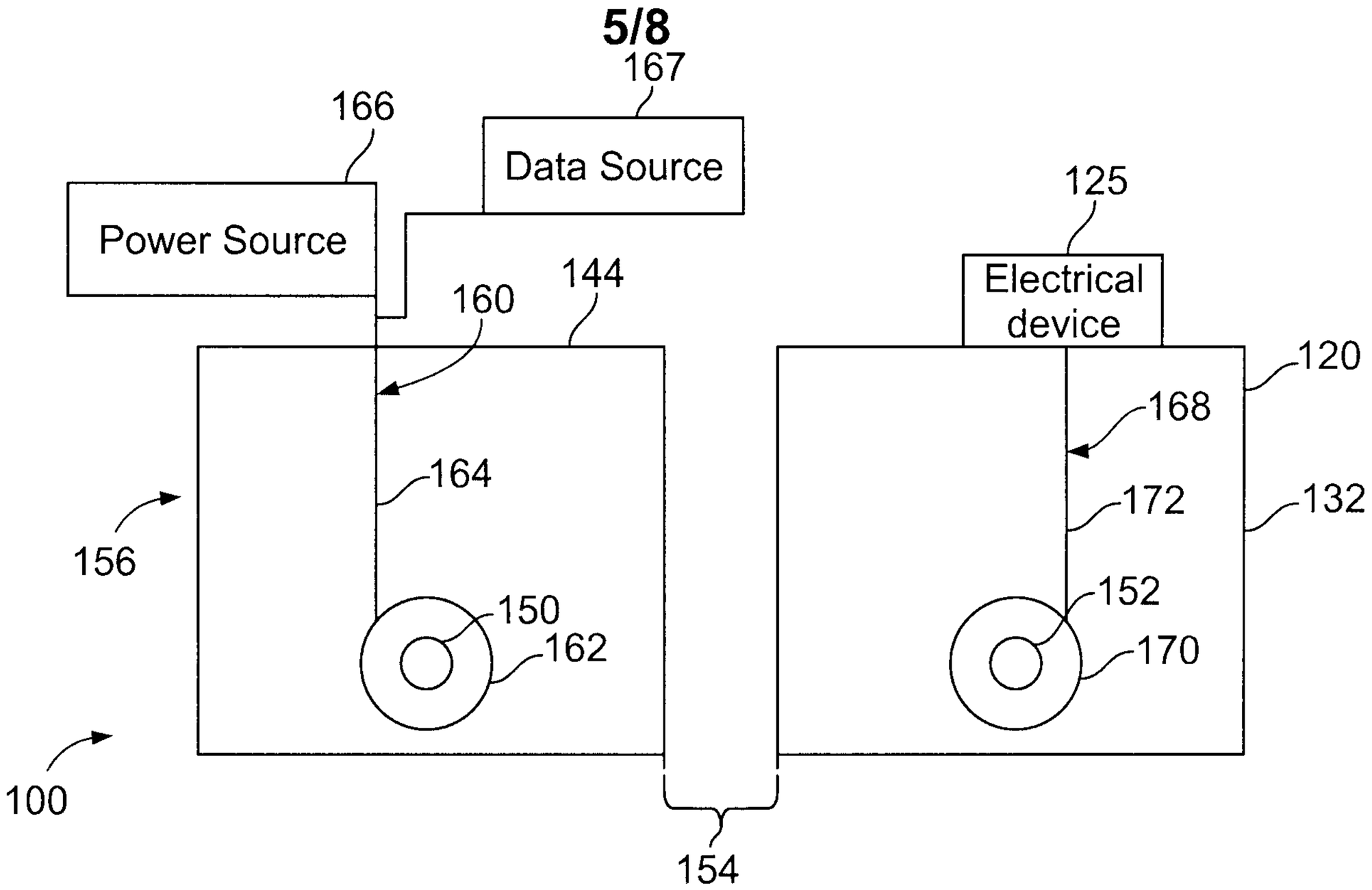
167
166
Data Source
Power Source
144
160
125
Electrical device
120
168
164
172
132
156
150
152
162
170
100
154

FIG. 6

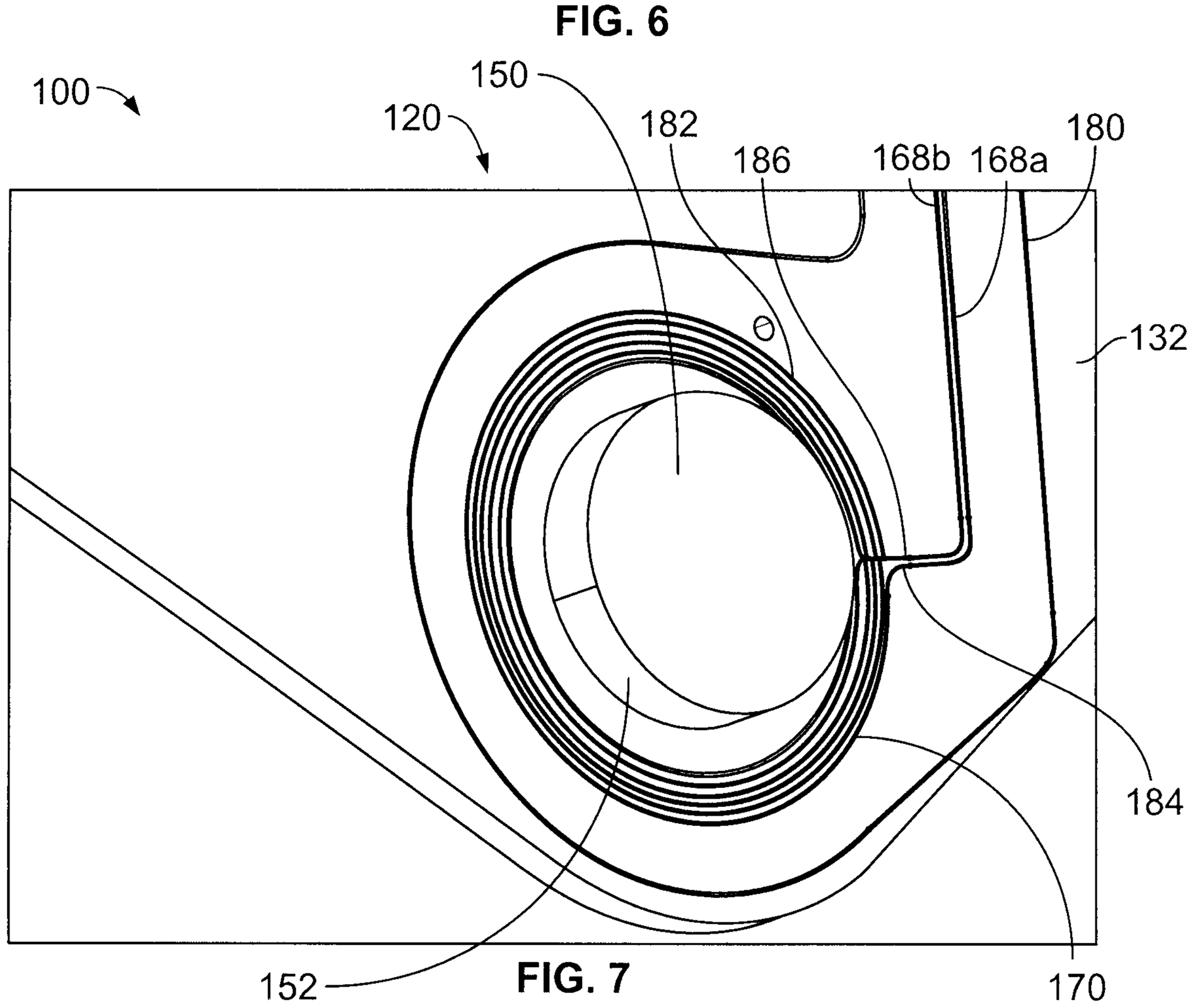
100
150
120
182
186
168b
168a
180
132
θ
184
152
170

FIG. 7

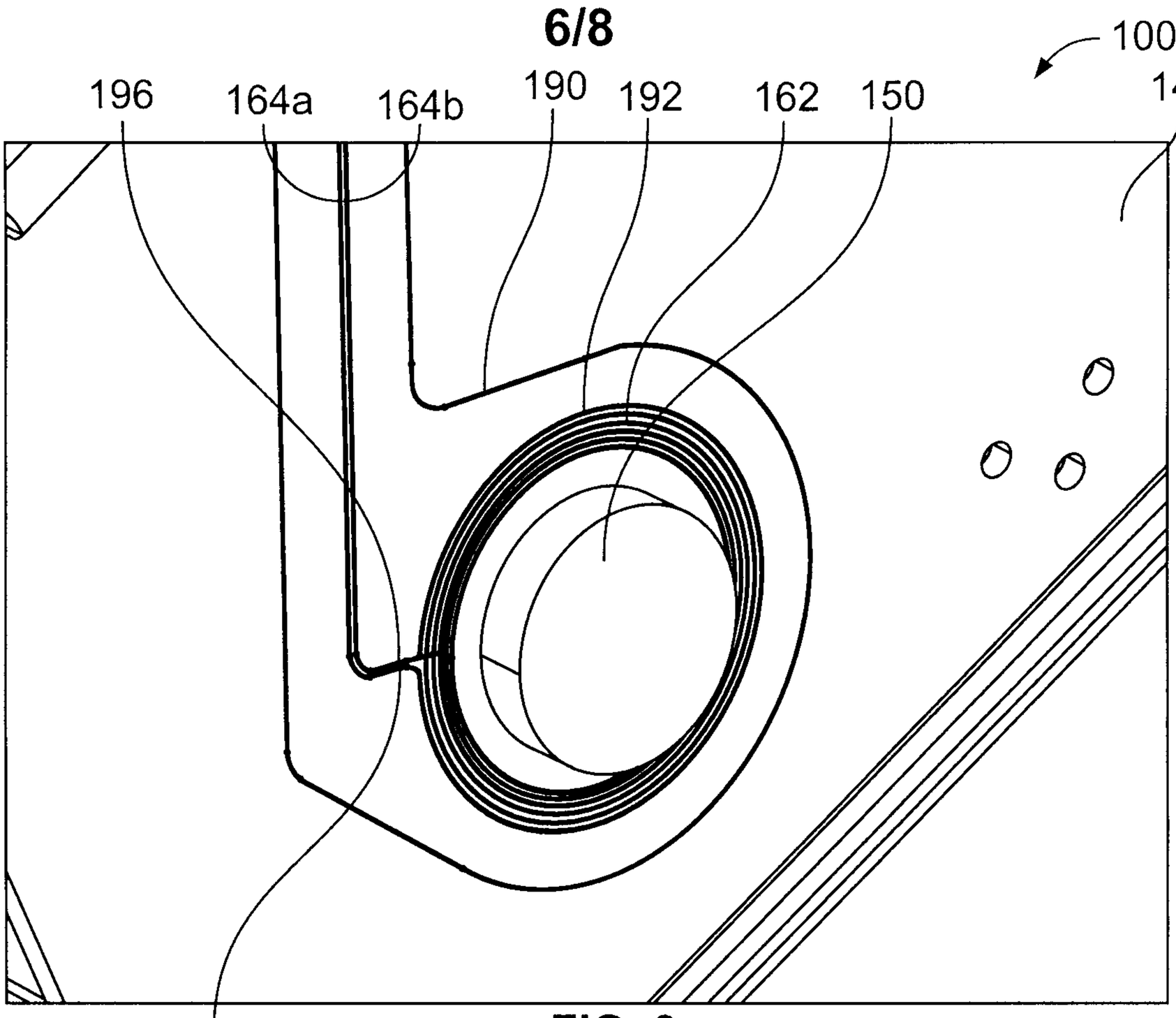
100
196
164a
164b
190
192
162
150
144
194

FIG. 8

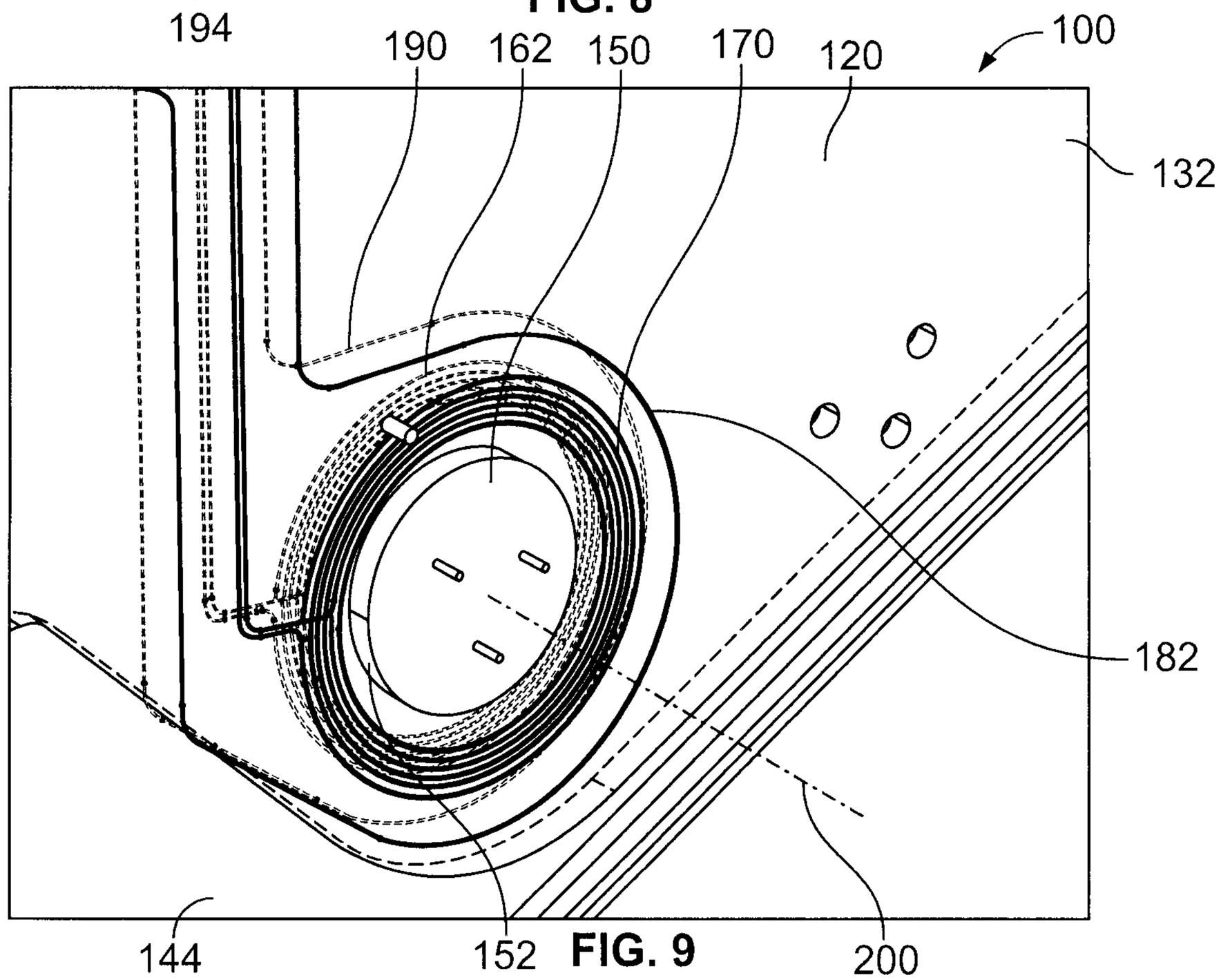
100
190
162
150
170
120
132
182
144
152
200

FIG. 9

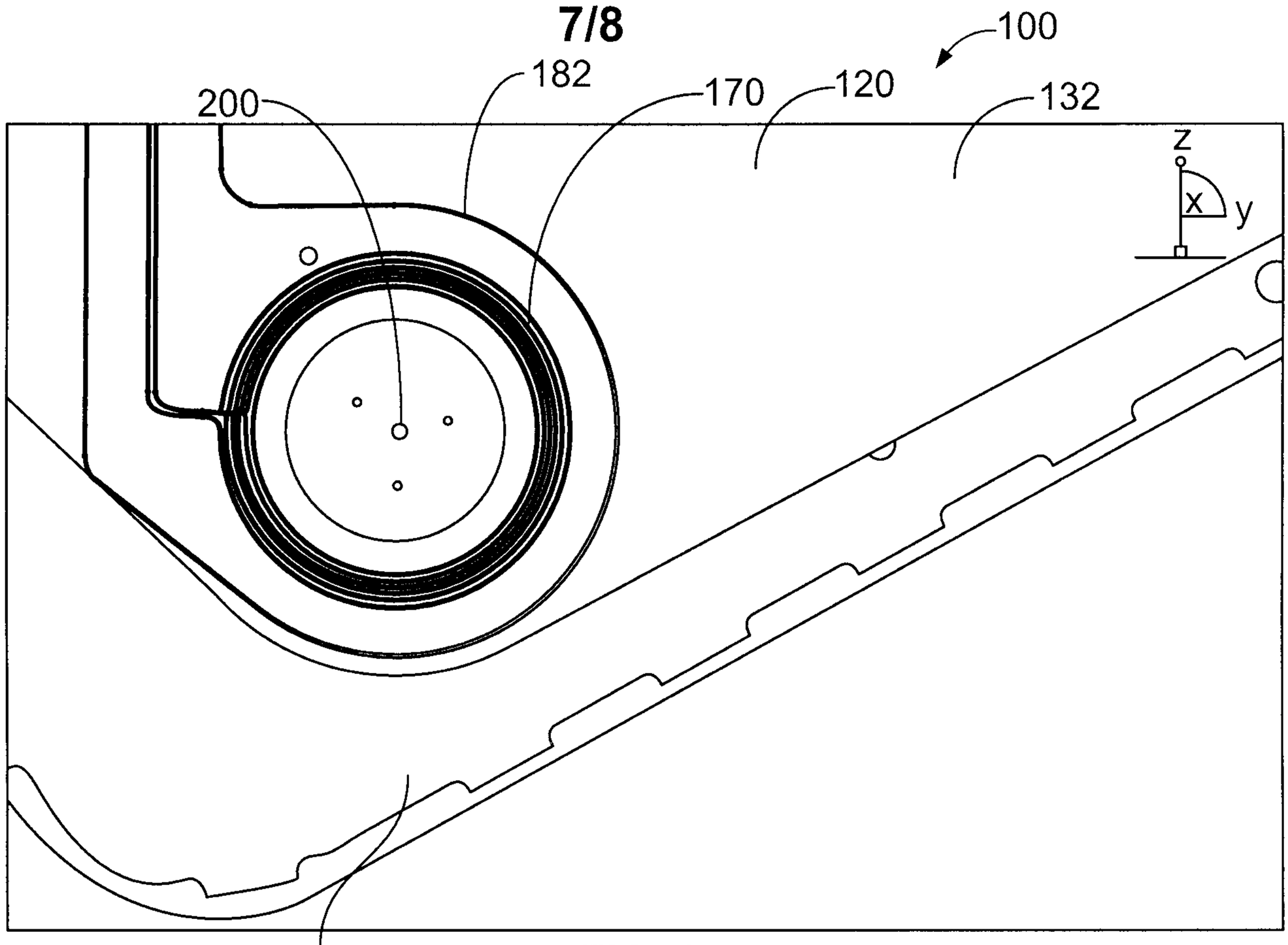
100
182
200
170
120
132
Z
X
y
144

FIG. 10

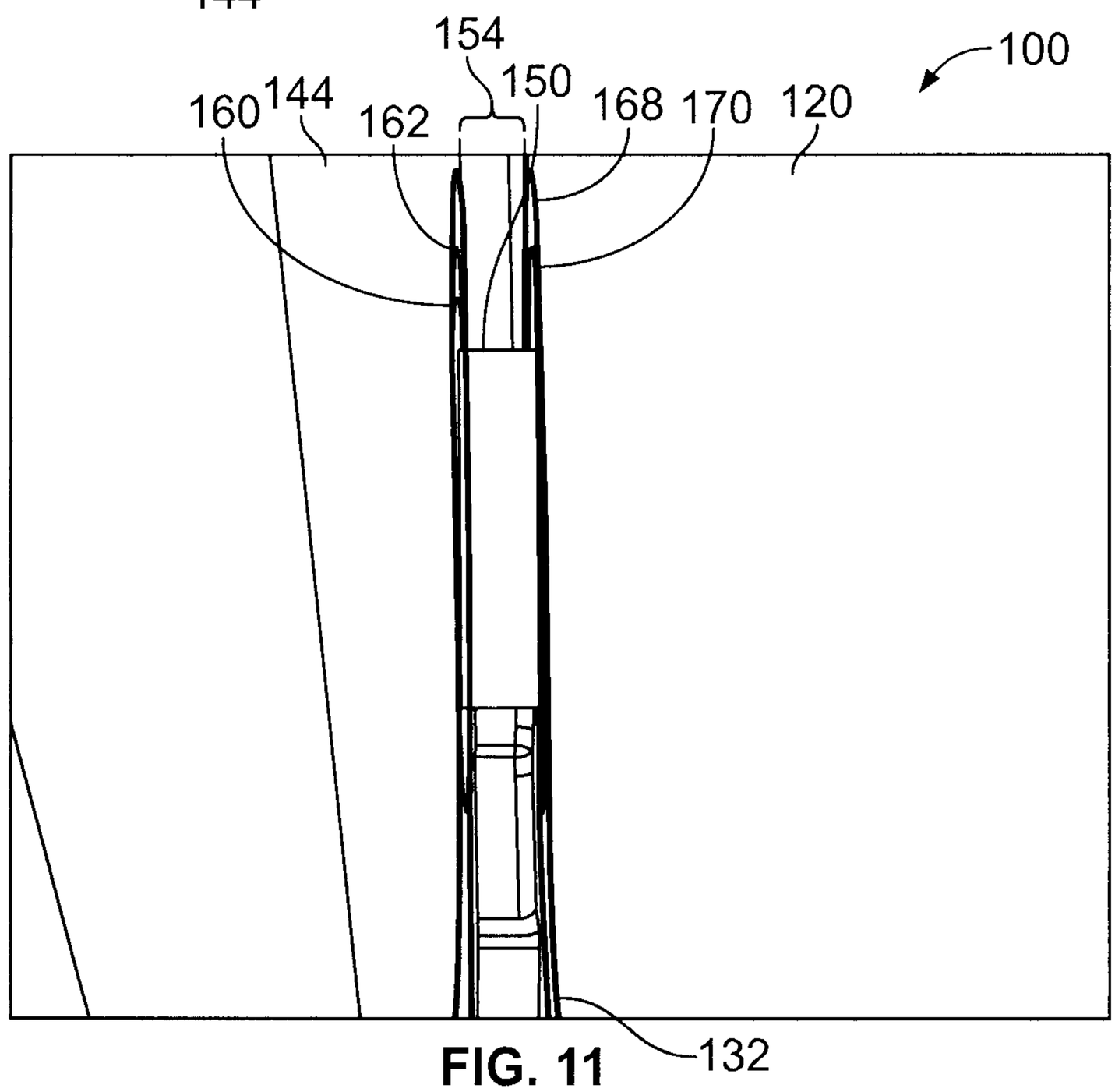
154
100
160
144
150
162
168
170
120
132

FIG. 11

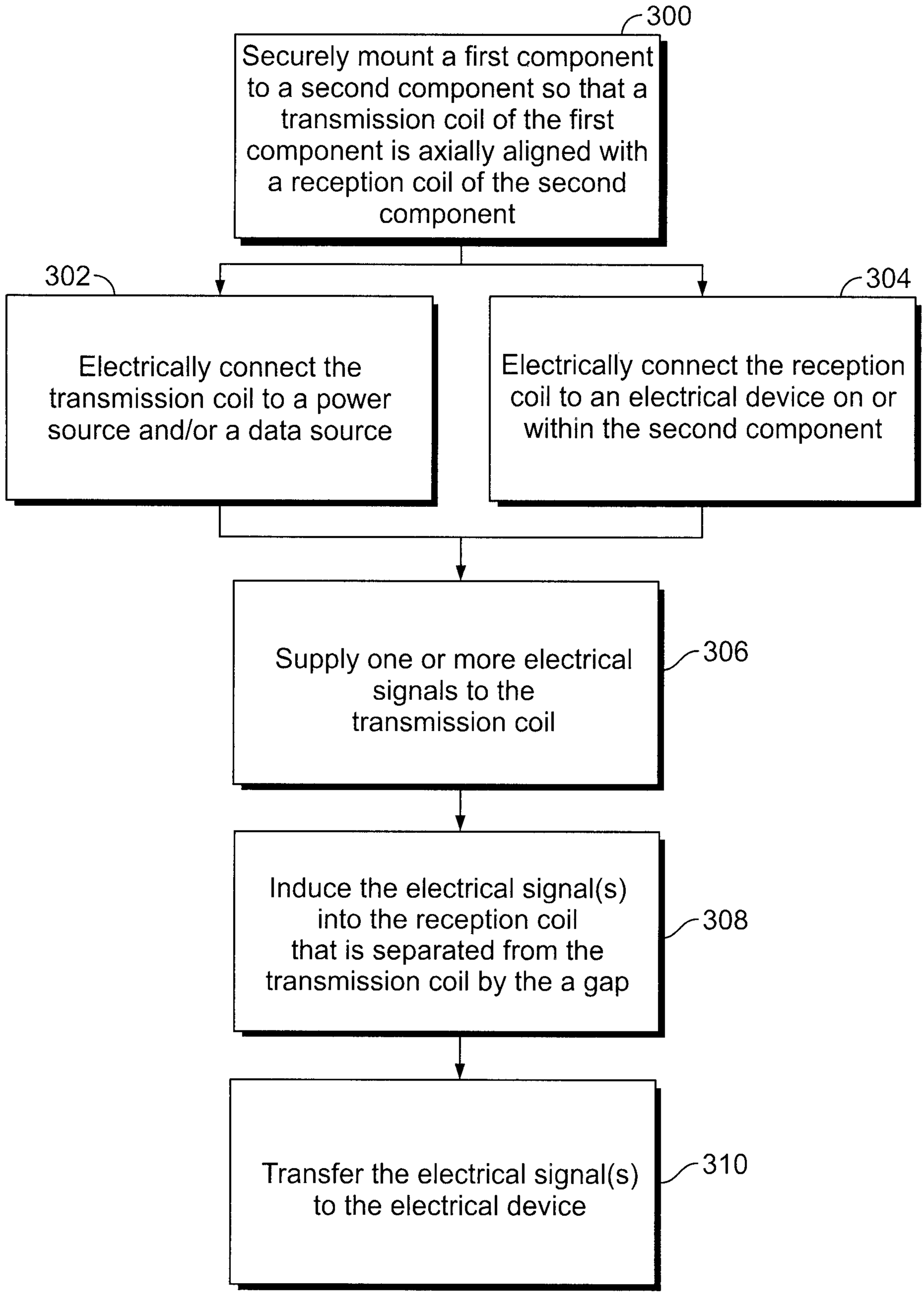
300
Securely mount a first component to a second component so that a transmission coil of the first component is axially aligned with a reception coil of the second component
302
Electrically connect the transmission coil to a power source and/or a data source
304
Electrically connect the reception coil to an electrical device on or within the second component
Supply one or more electrical signals to the transmission coil
306
Induce the electrical signal(s) into the reception coil that is separated from the transmission coil by the a gap
308
Transfer the electrical signal(s) to the electrical device
310

FIG. 12

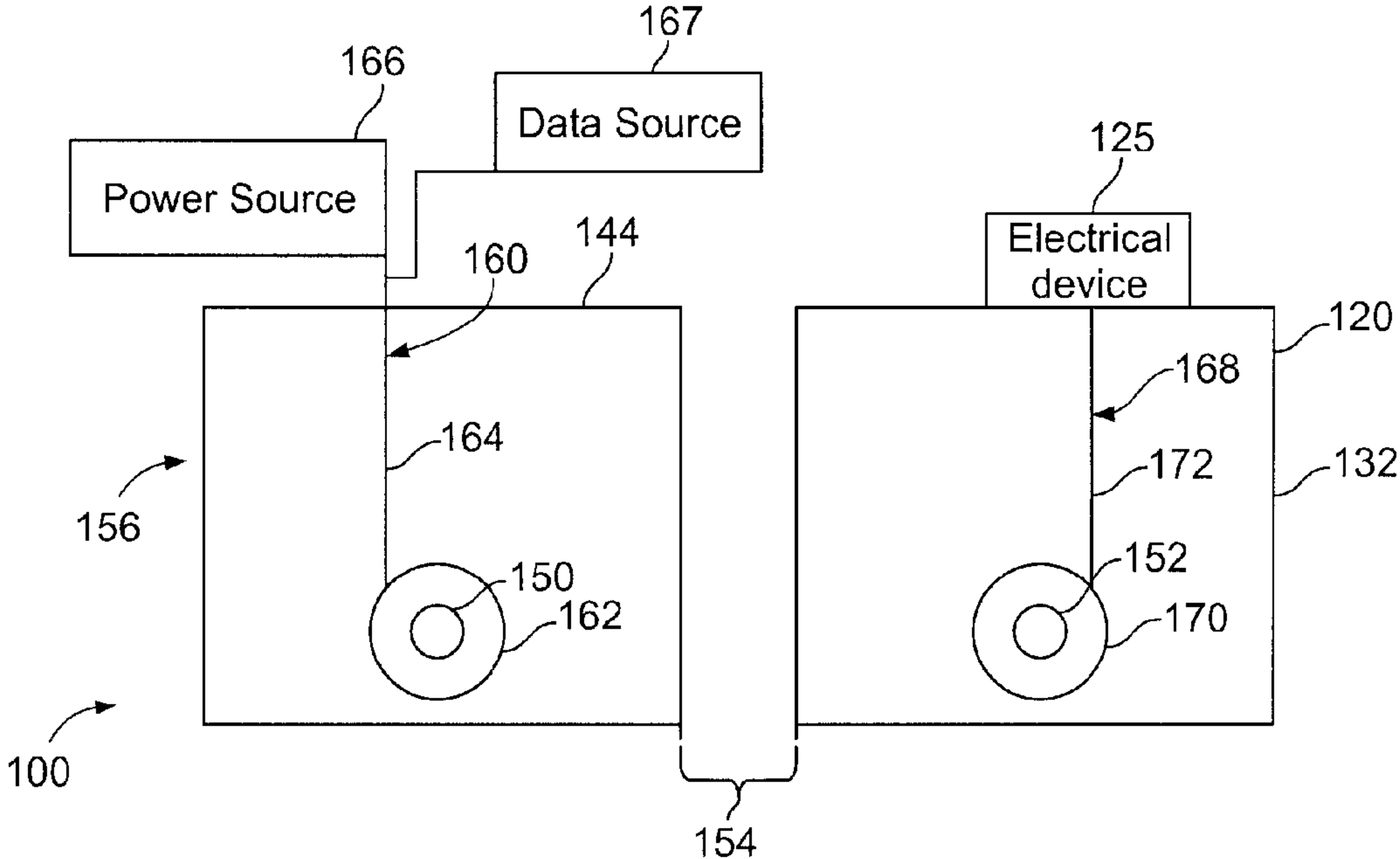
167
166
Data Source
Power Source
125
Electrical device
144
160
120
168
164
172
132
156
152
150
162
170
100
154