US 20150053779A1

(19) **United States**

(12) **Patent Application Publication**

Adamek et al.

(10) **Pub. No.: US 2015/0053779 A1**

(43) **Pub. Date: Feb. 26, 2015**

(54) **DEVICES AND METHODS FOR INTERACTING WITH AN HVAC CONTROLLER**

(71) Applicant: **Honeywell International Inc.**, Morristown, NJ (US)

(72) Inventors: **Martin Adamek**, Pelhrimov (CZ); **Juraj Buno**, Stara Tura (SK); **Jan Malek**, Brno (CZ); **Adam Nemcek**, Ostrava (CZ); **Martin Skala**, Olomouc (CZ); **David Bures**, Ceska (CZ); **Libor Horky**, Brno (CZ); **Steven Hoglund**, Minneapolis, MN (US); **Jay Nelson**, Eden Prairie, MN (US)

(21) Appl. No.: **14/463,708**

(22) Filed: **Aug. 20, 2014**

Related U.S. Application Data

(60) Provisional application No. 61/868,441, filed on Aug. 21, 2013.

Publication Classification

(51) **Int. Cl.**
F24F 11/00 (2006.01)

(52) **U.S. Cl.**
CPC ***F24F 11/0086*** (2013.01); ***F24F 11/006*** (2013.01); *F24F 2011/0071* (2013.01); *F24F 2011/0091* (2013.01)
USPC ..... **236/1 C**; 236/51

(57) **ABSTRACT**

An HVAC controller may be controlled in response to a natural language audio message that is not recognizable by the HVAC controller as a command, where the natural language audio message is translated into a command recognizable by the HVAC controller. Voice recognition software identifies a trigger phrase included in the natural language audio message and in response the HVAC controller performs an action. The voice recognition software may be used to create a natural language text based message from a recorded voice message or streamed voice message, where the natural language text based message is translated into the command recognizable by the HVAC controller. In response to the command, the HVAC controller may perform an action and/or respond with a natural language text based or audio message. A user may communicate with the thermostat via the thermostat and/or a remote device.

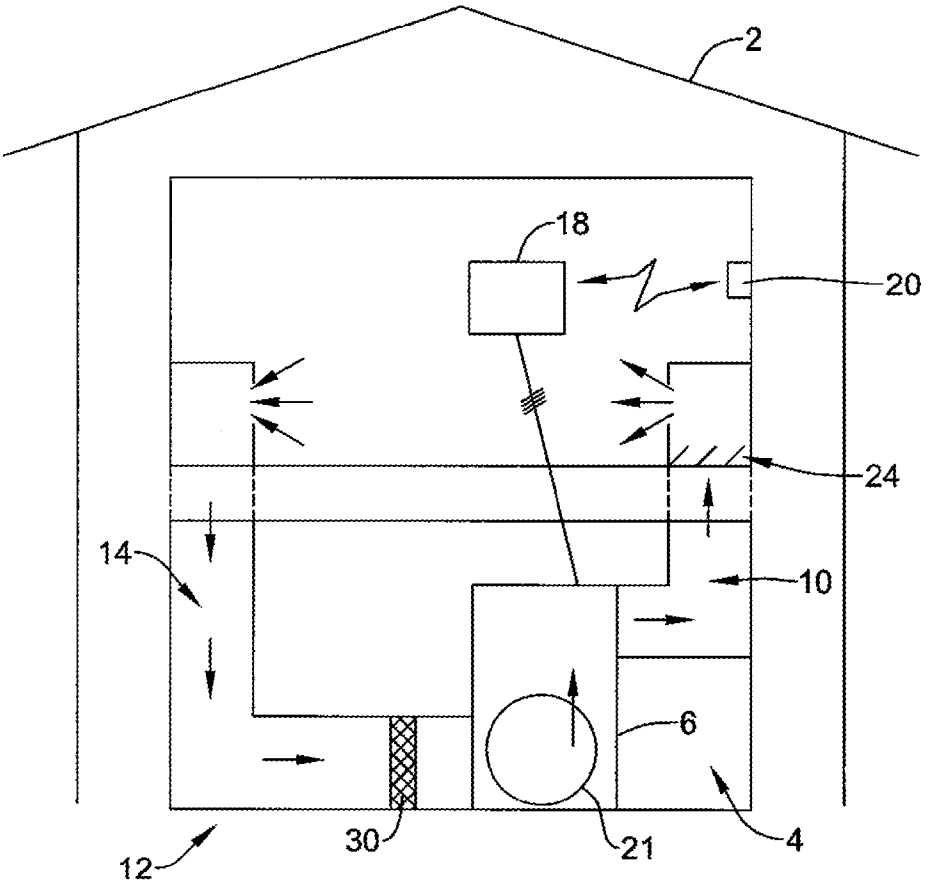

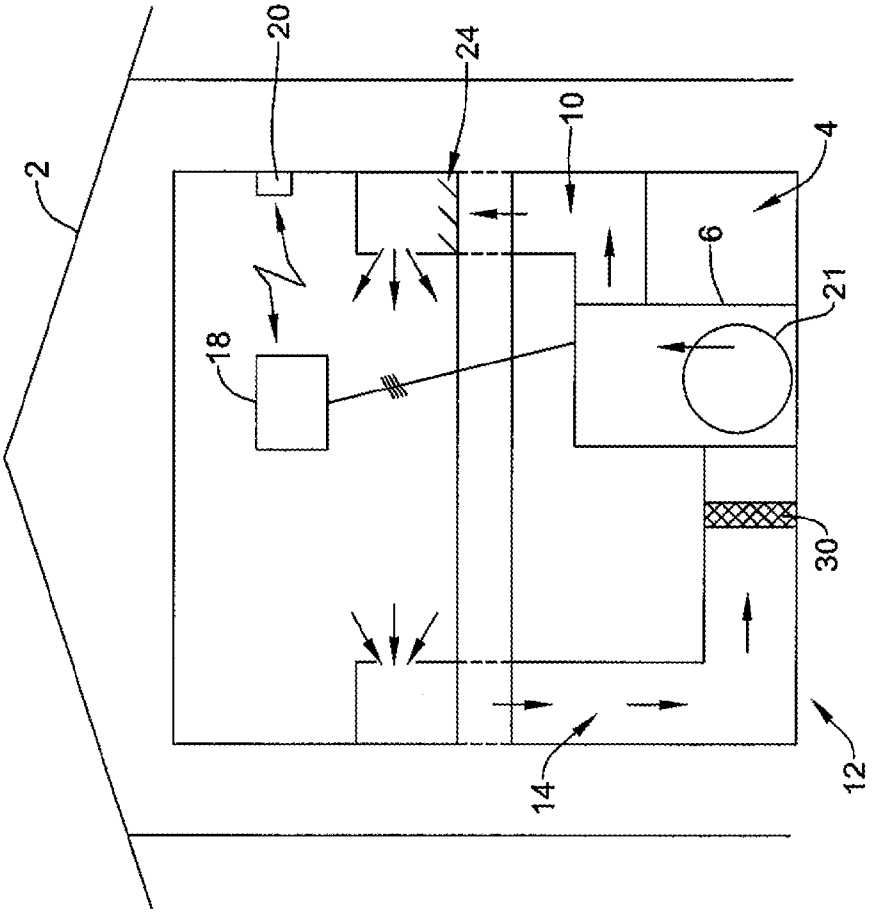

FIG. 1

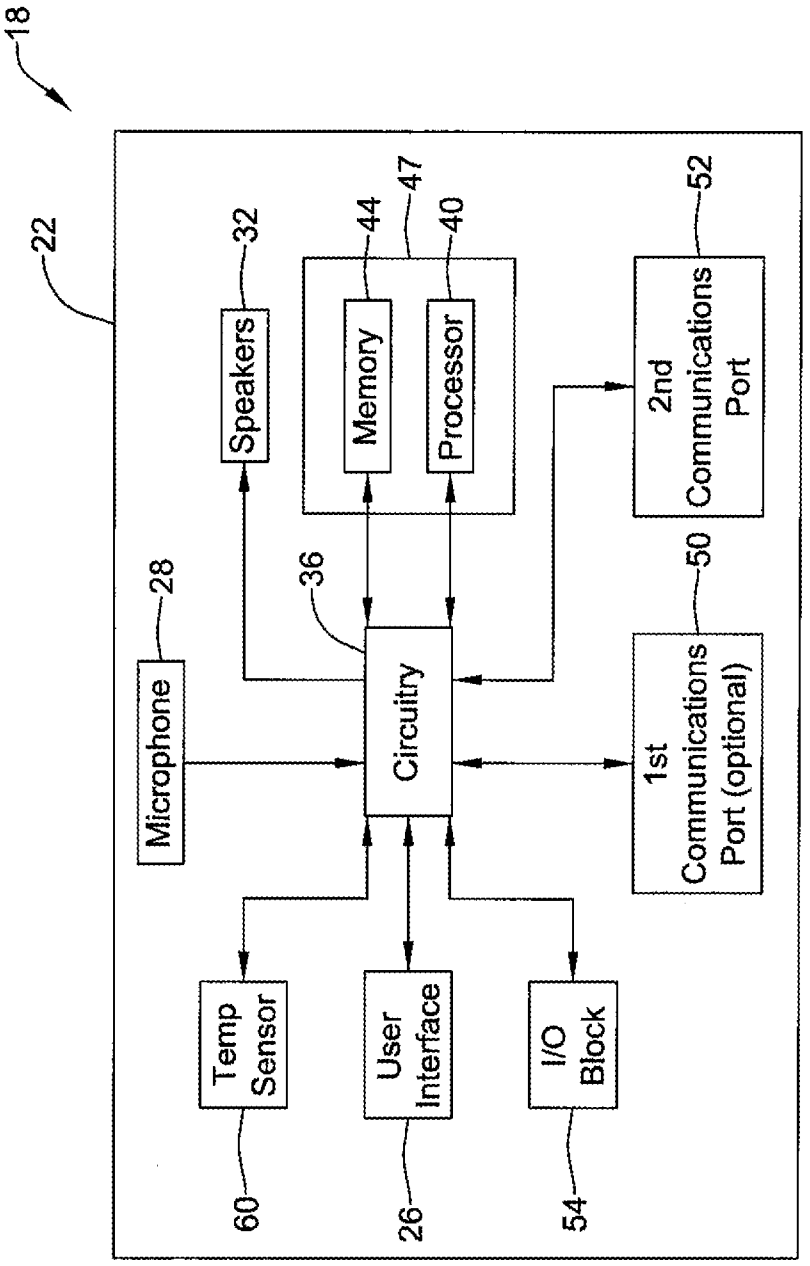
18
22
Speakers
32
Memory
44
Processor
40
47
2nd Communications Port
52
Microphone
28
36
Circuitry
1st Communications Port (optional)
50
Temp Sensor
User Interface
I/O Block
60
26
54

FIG. 2

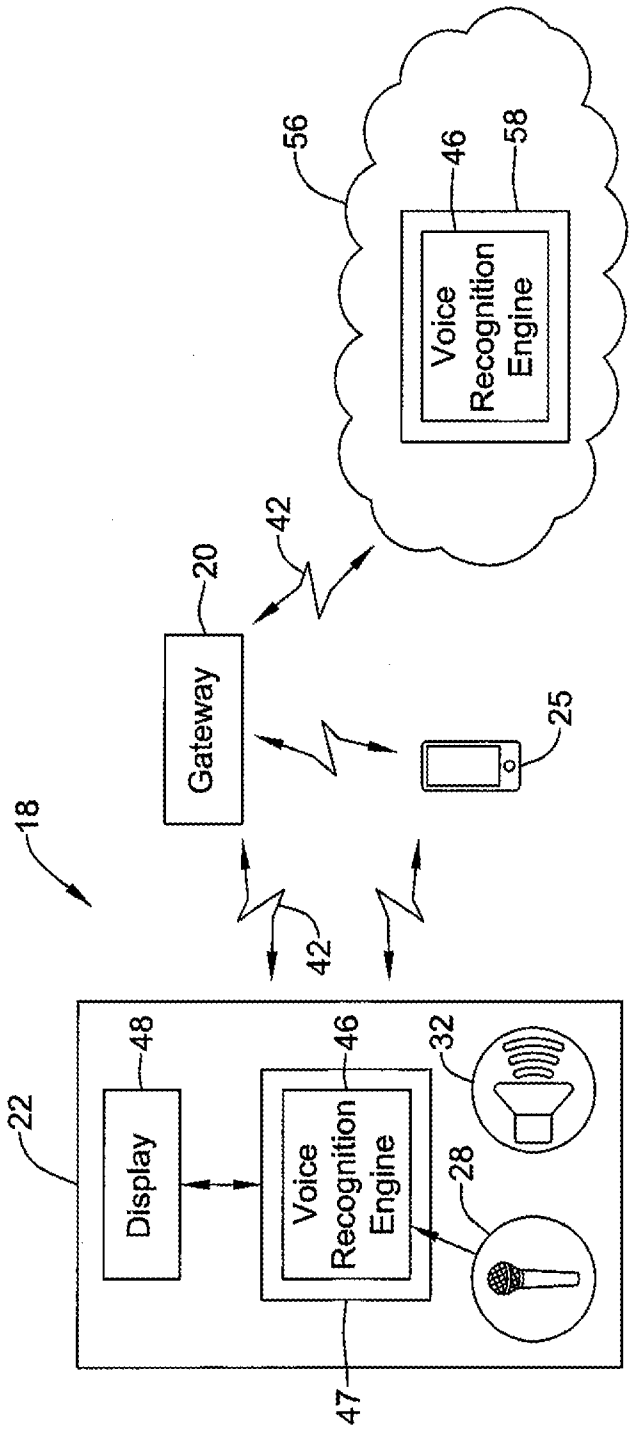
56
46
58
Voice Recognition Engine
42
20
Gateway
25
18
42
22
48
Display
46
Voice Recognition Engine
32
28
47

FIG. 3

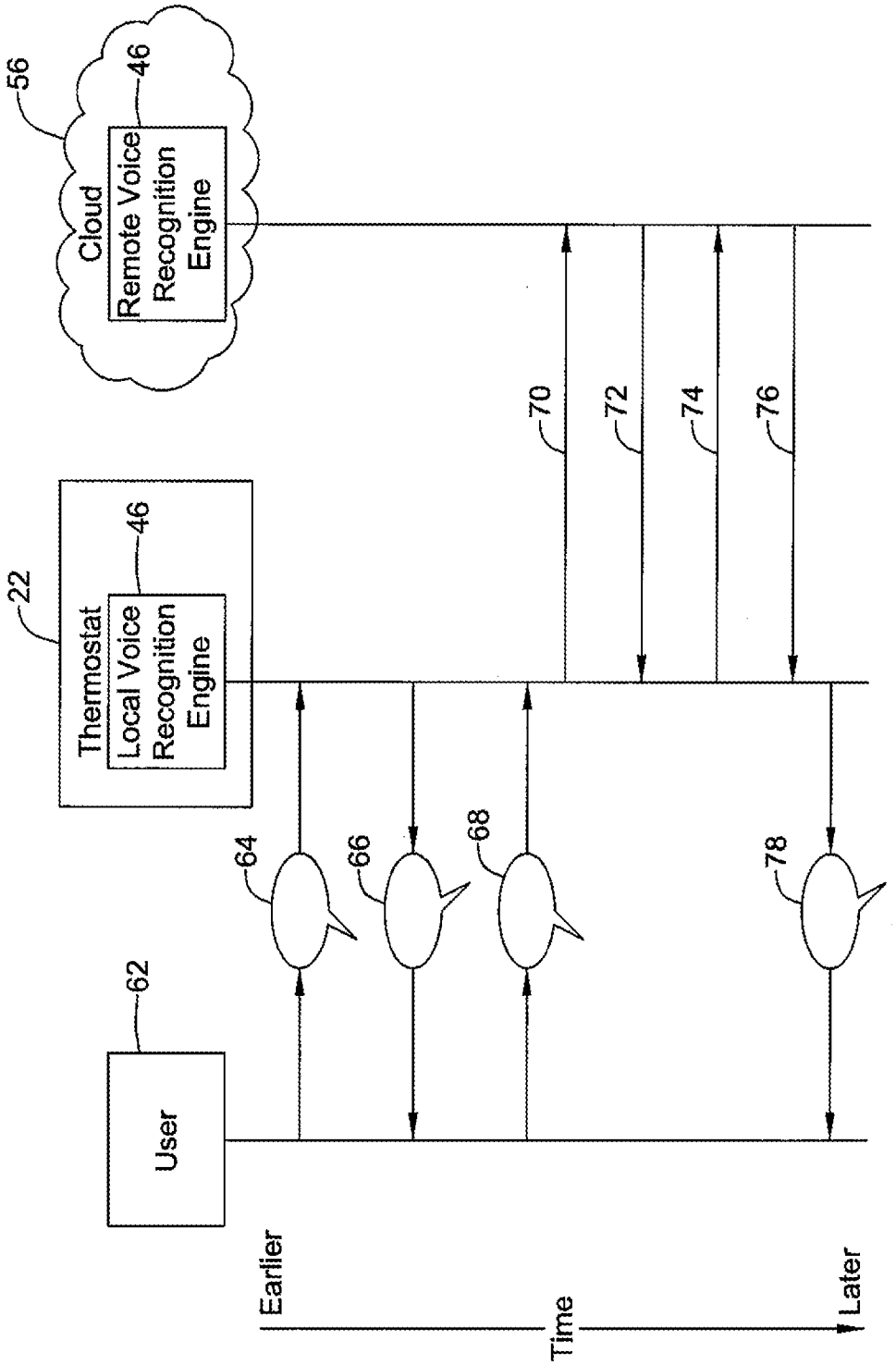
56
Cloud
46
Remote Voice Recognition Engine
70
72
74
76
22
Thermostat
46
Local Voice Recognition Engine
64
66
68
78
62
User
Earlier
Time
Later

FIG. 4

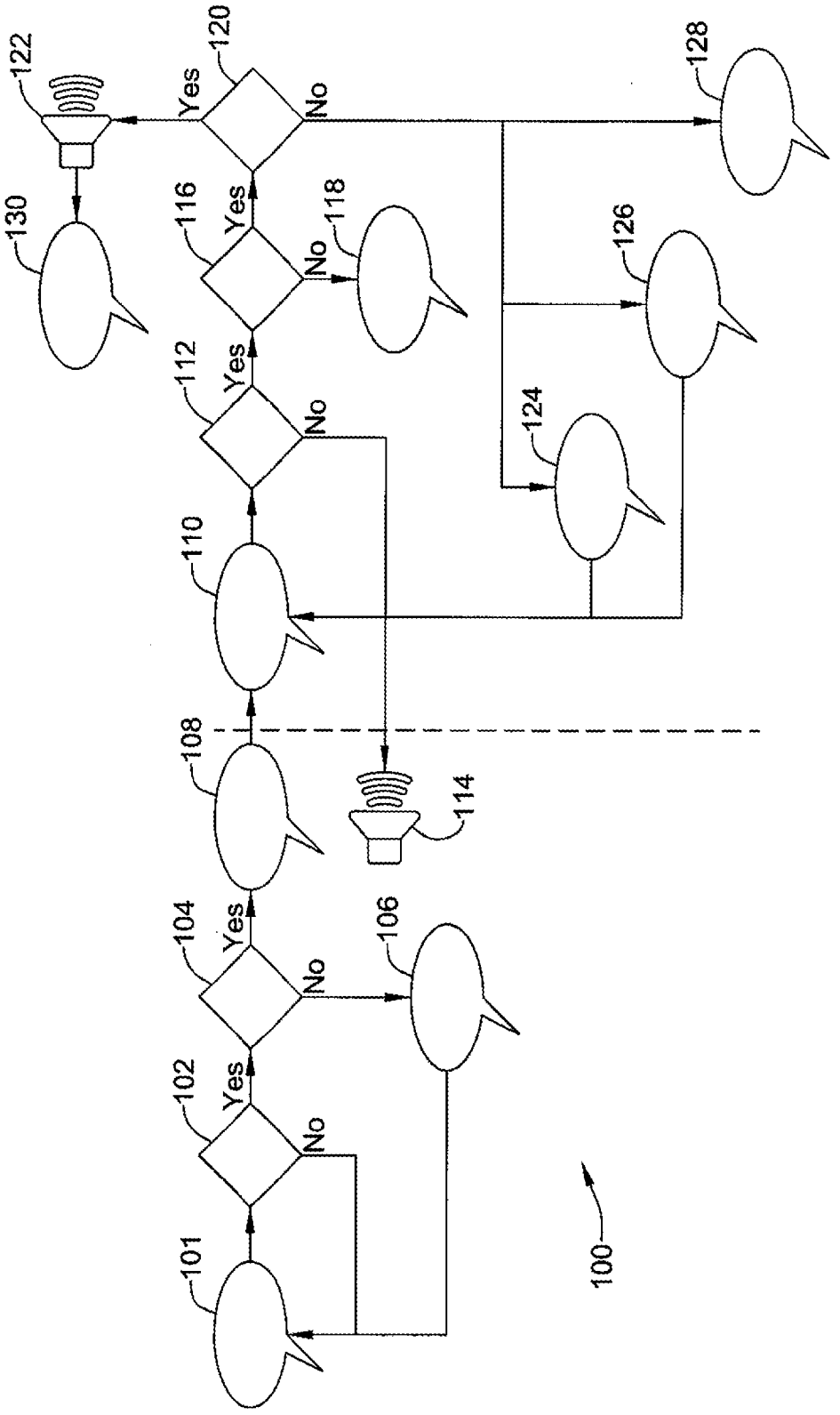
122
120
Yes
No
128
130
116
Yes
118
No
126
112
Yes
No
124
110
108
114
104
Yes
106
No
102
Yes
No
101
100

FIG. 5

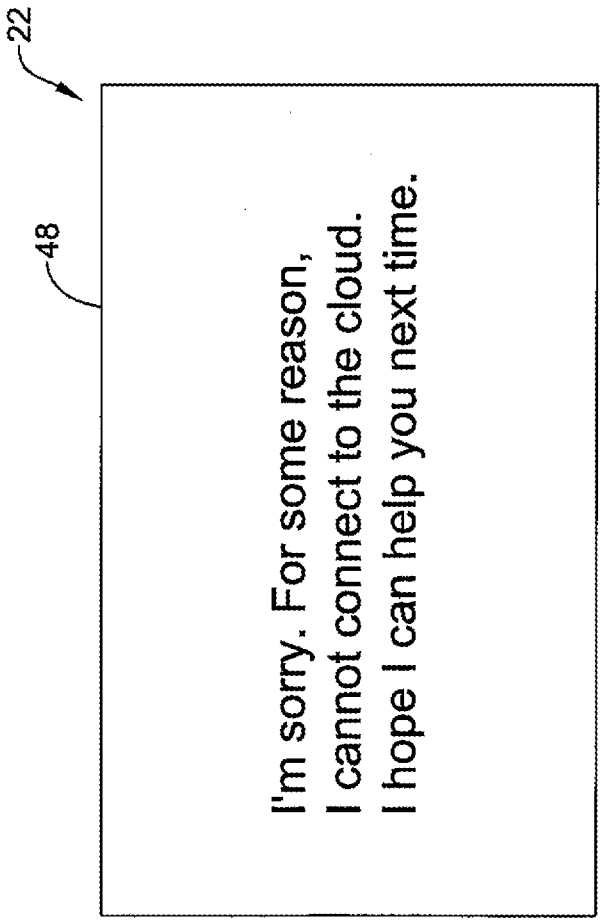
22
48
I'm sorry. For some reason,
I cannot connect to the cloud.
I hope I can help you next time.

FIG. 6

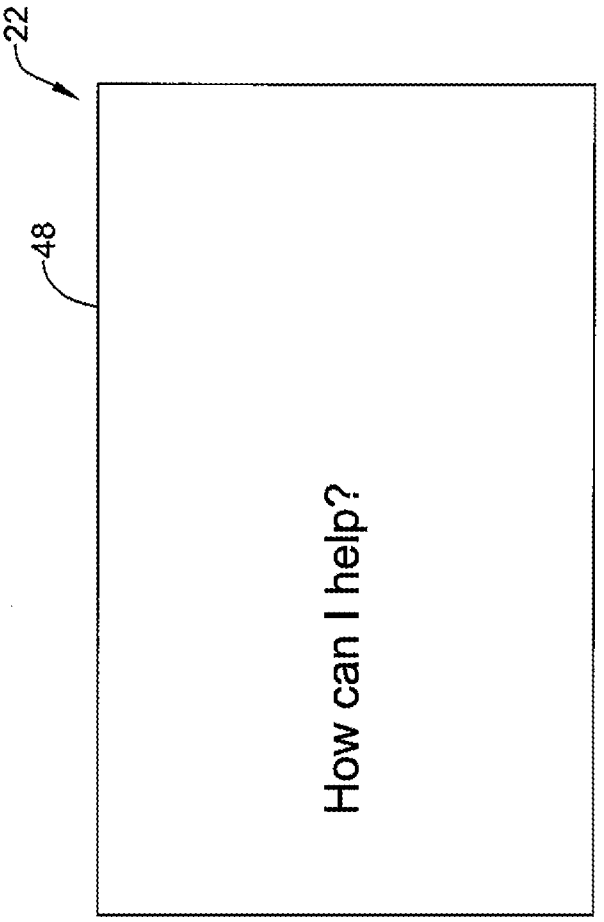

FIG. 7

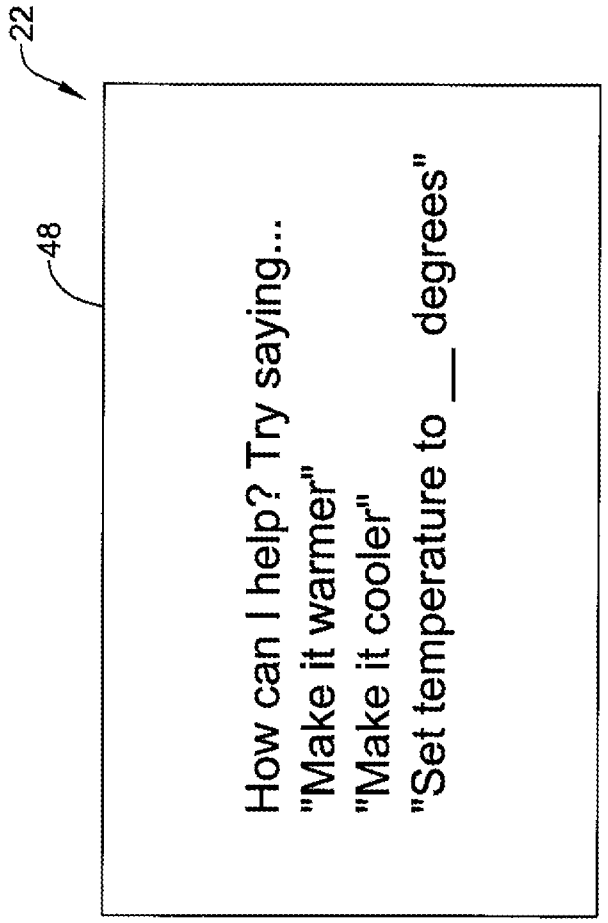
22
48
How can I help? Try saying...
"Make it warmer"
"Make it cooler"
"Set temperature to __ degrees"

FIG. 8

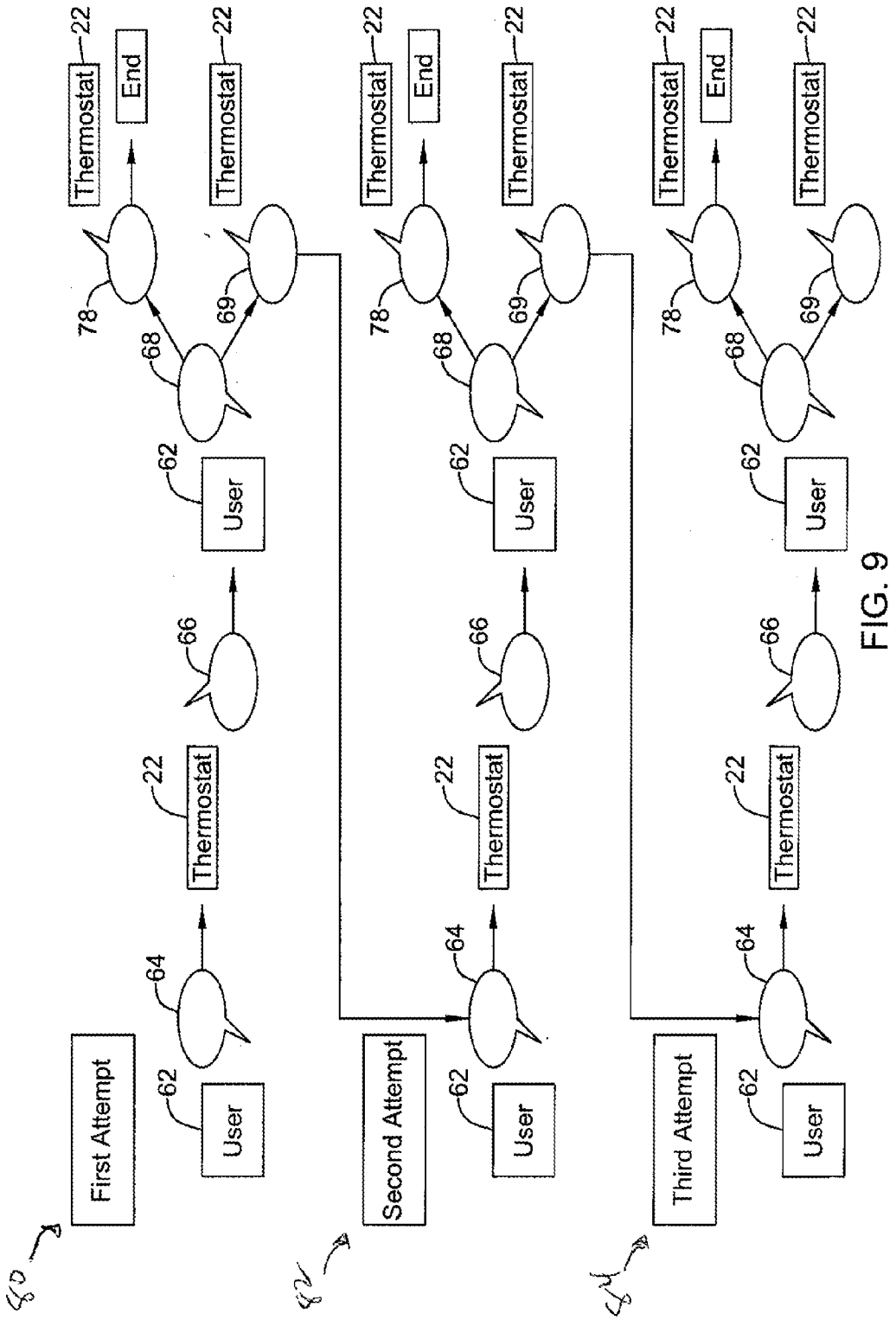
First Attempt
Second Attempt
Third Attempt
User
Thermostat
End
62
64
66
68
69
78
22

FIG. 9

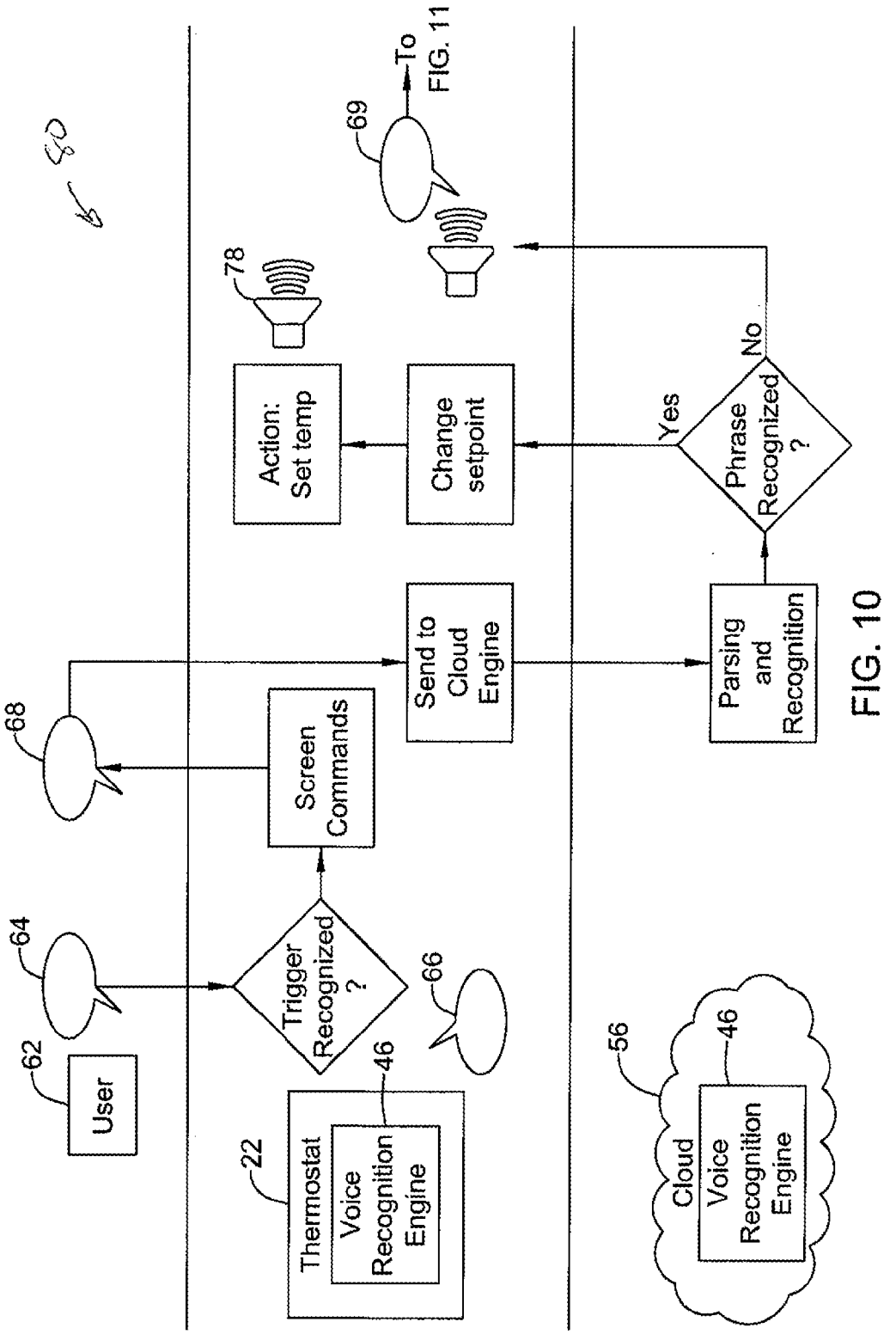
50
User
62
64
Trigger Recognized ?
66
Thermostat
22
Voice Recognition Engine
46
Screen Commands
68
Send to Cloud Engine
Cloud
56
Voice Recognition Engine
46
Parsing and Recognition
Phrase Recognized ?
Yes
No
Change setpoint
Action: Set temp
78
69
To FIG. 11

FIG. 10

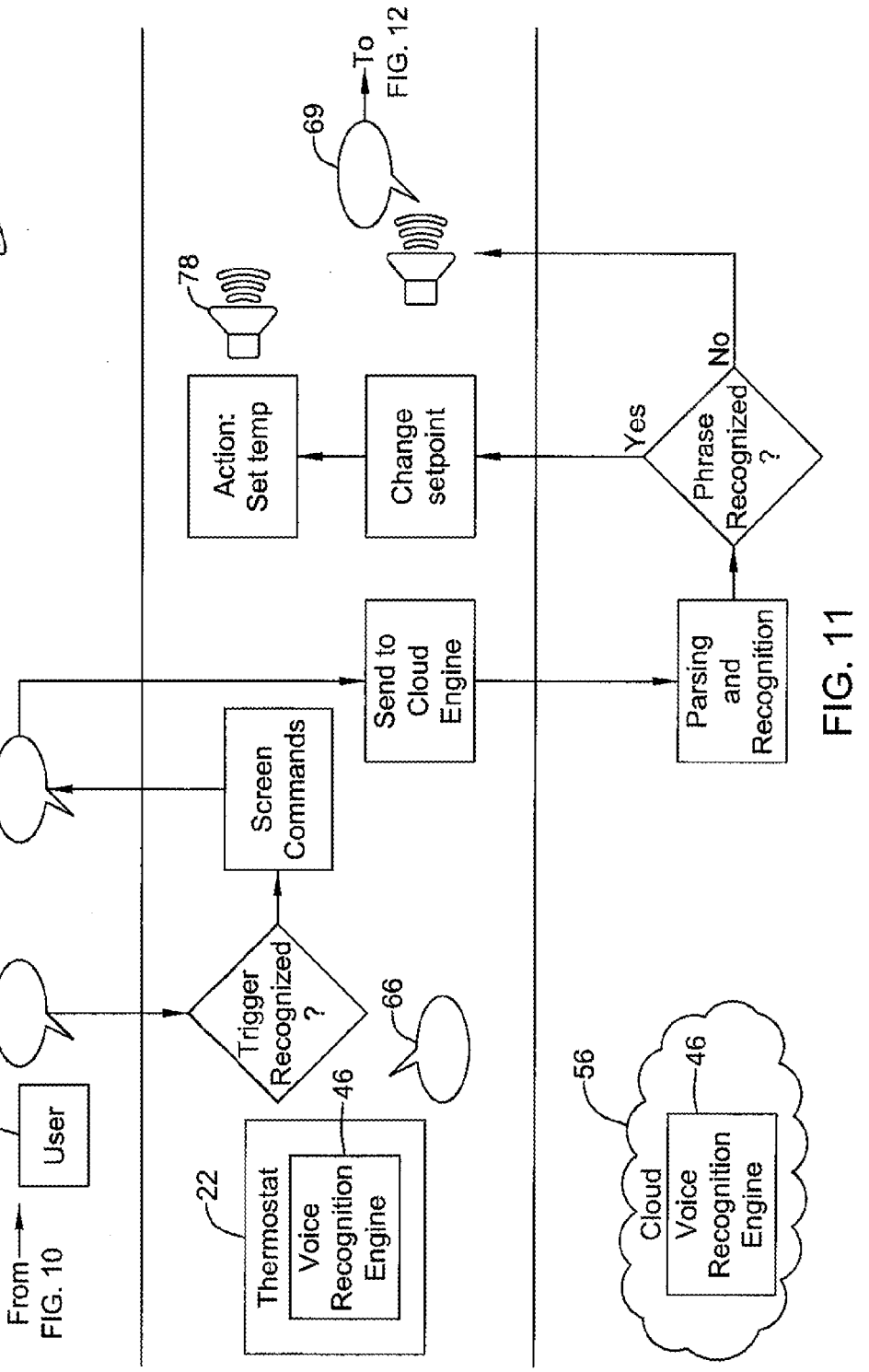
82
From FIG. 10
62
User
64
66
68
69
To FIG. 12
22
Thermostat
Voice Recognition Engine
46
Trigger Recognized ?
Screen Commands
Send to Cloud Engine
Parsing and Recognition
Phrase Recognized ?
Yes
No
Change setpoint
Action: Set temp
78
56
Cloud
Voice Recognition Engine
46

FIG. 11

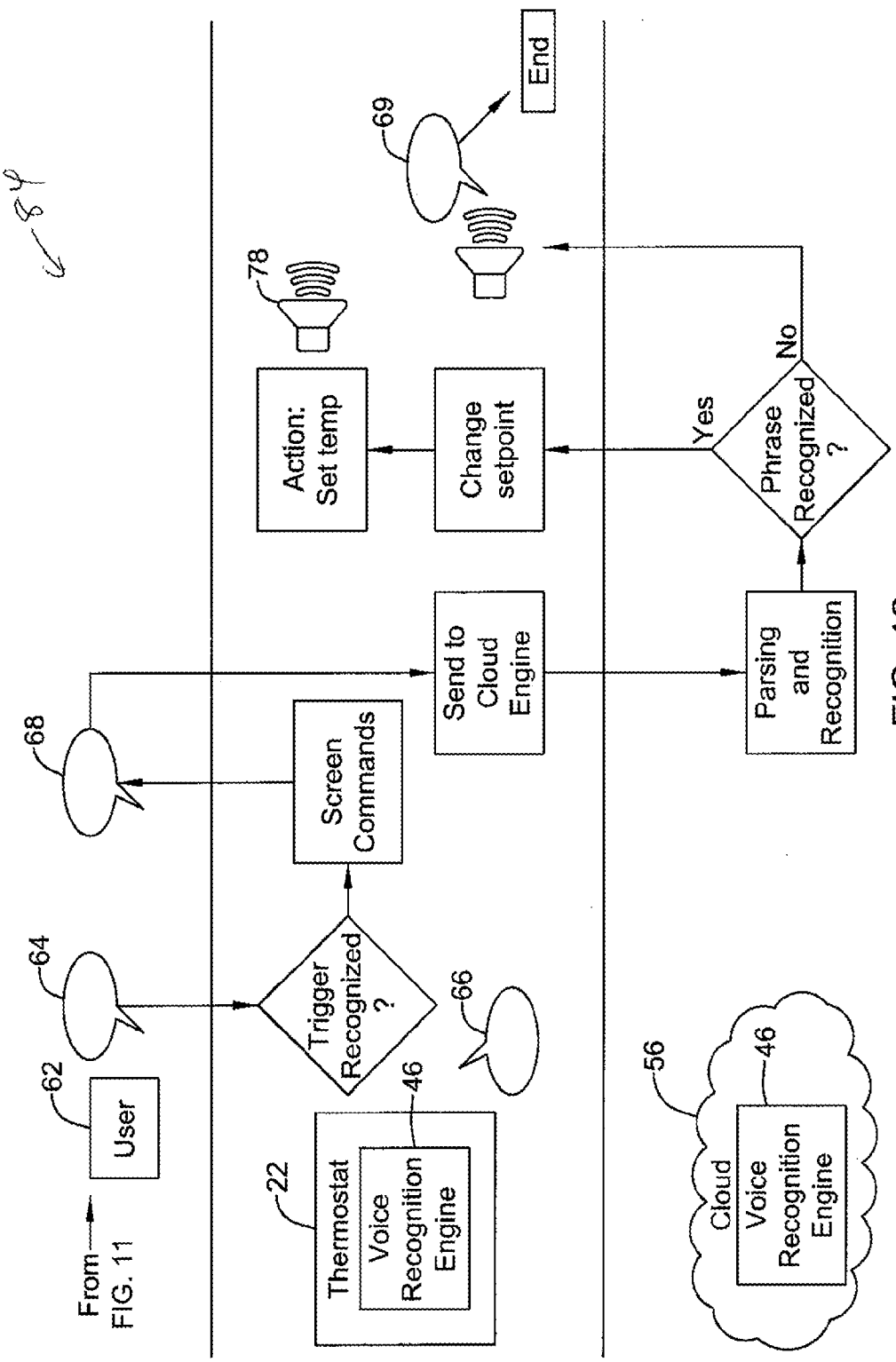
84
From FIG. 11
62
User
64
Trigger Recognized ?
66
22
Thermostat
Voice Recognition Engine
46
68
Screen Commands
Send to Cloud Engine
Parsing and Recognition
Phrase Recognized ?
Yes
No
Change setpoint
Action: Set temp
78
69
End
56
Cloud
Voice Recognition Engine
46

FIG. 12

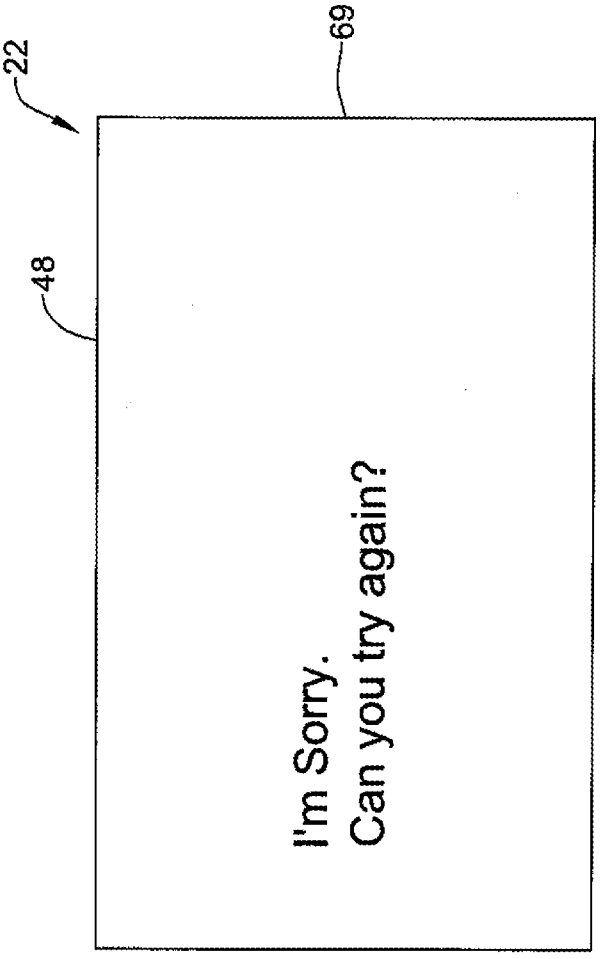

FIG. 13

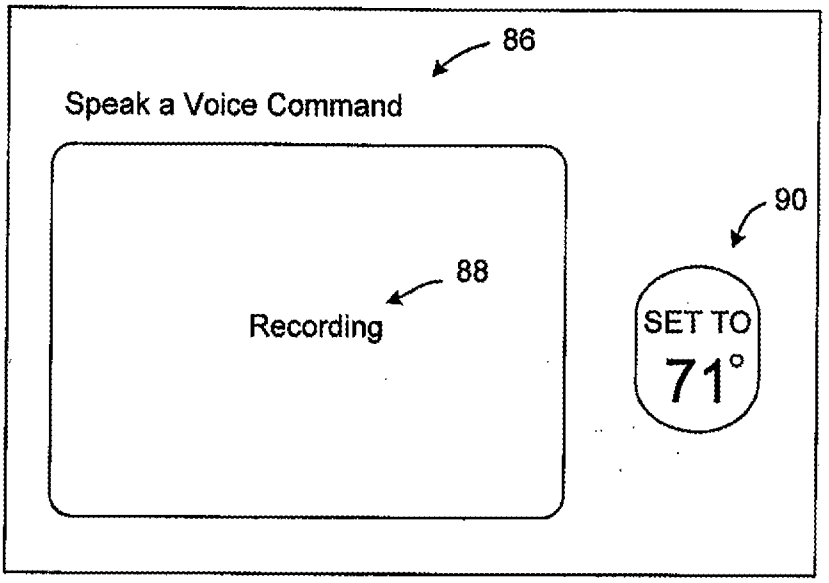

Figure 14

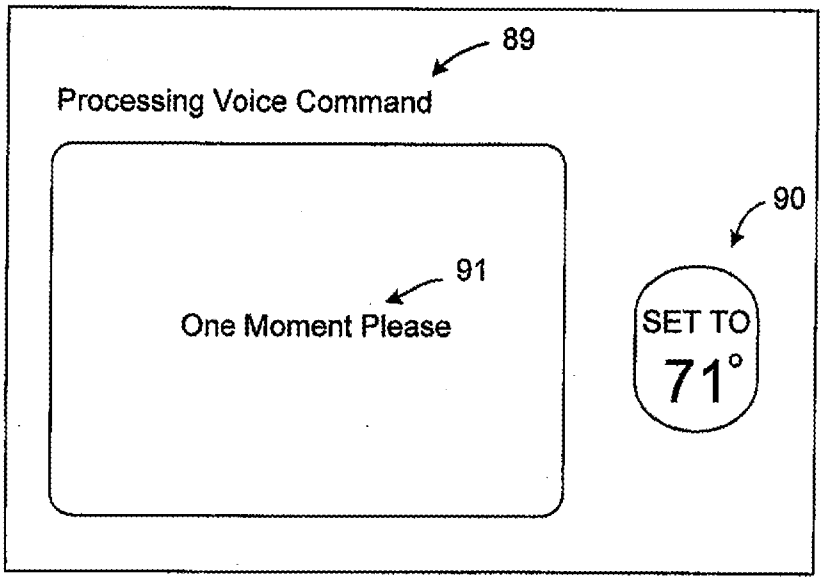

Figure 15

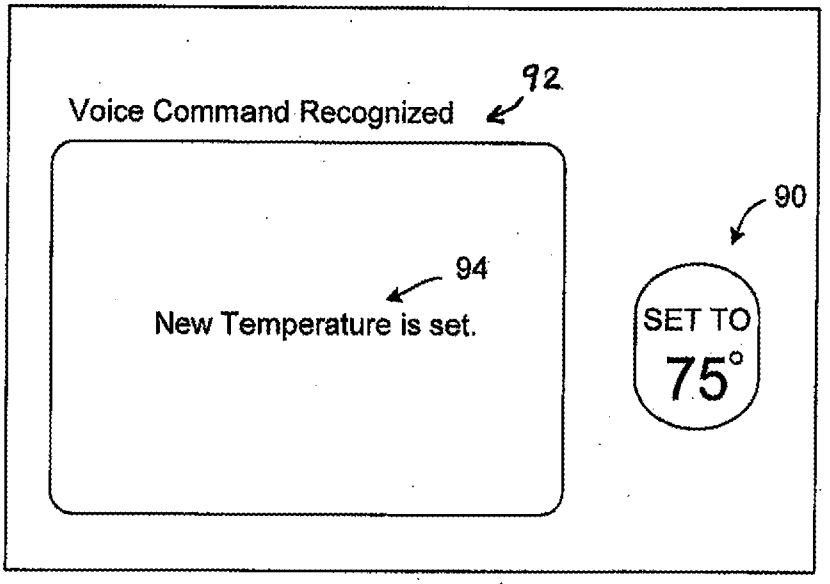

Figure 16

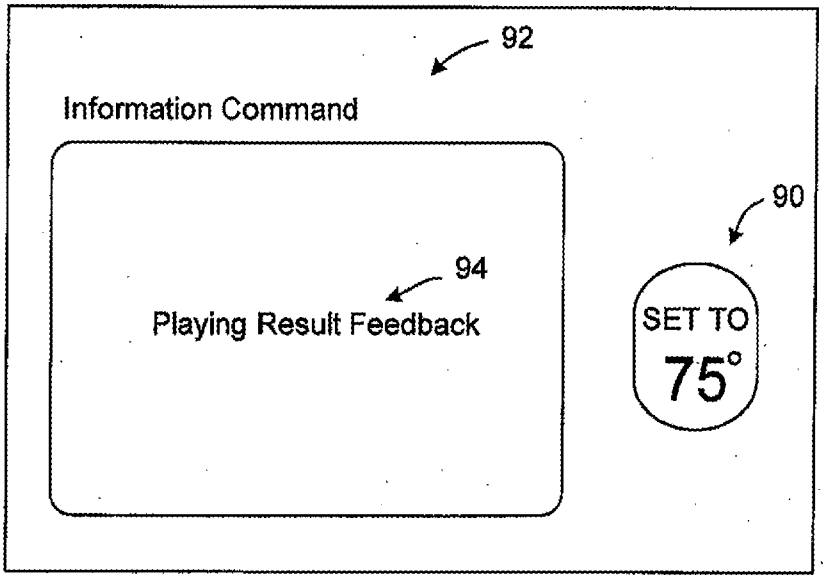

Figure 17

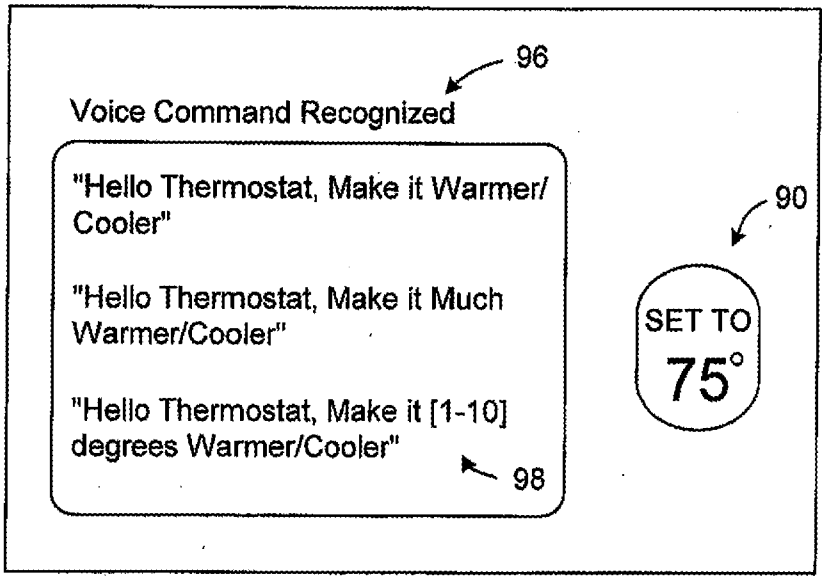

Figure 18

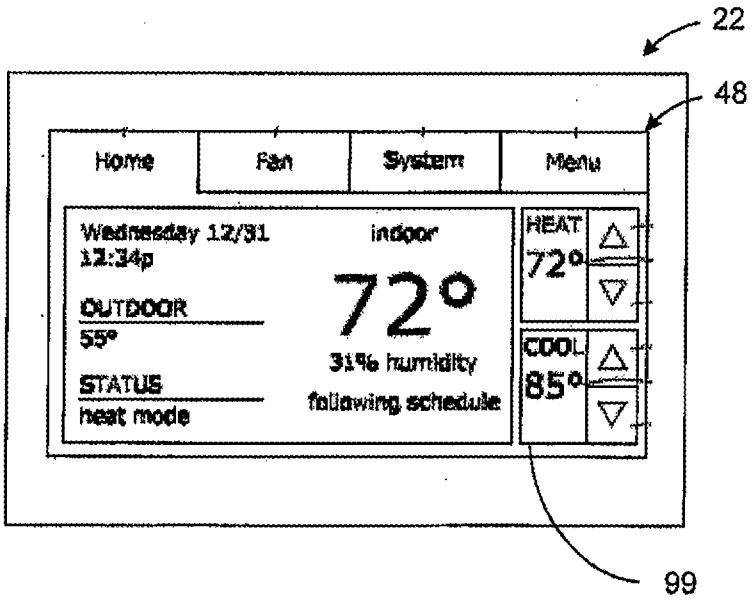

Figure 19

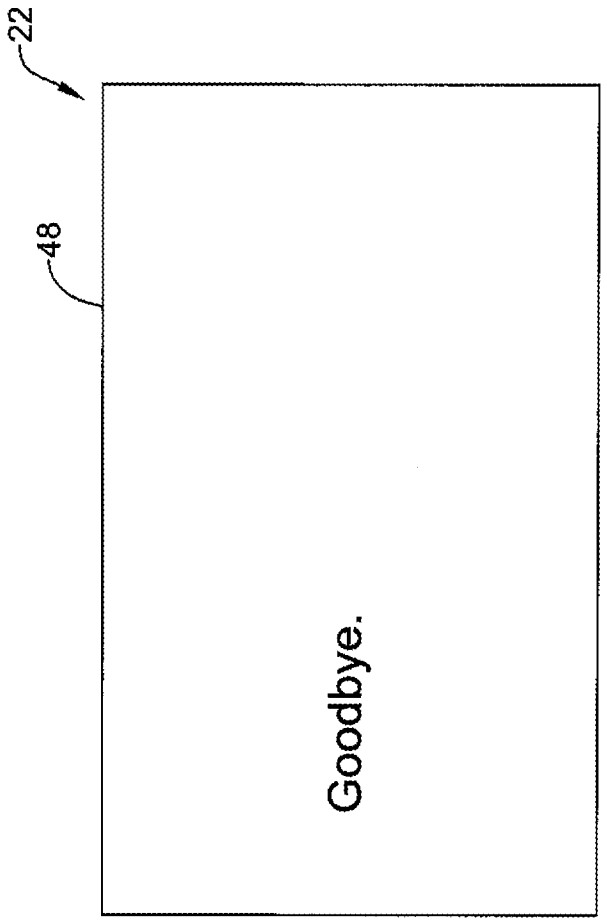

FIG. 20

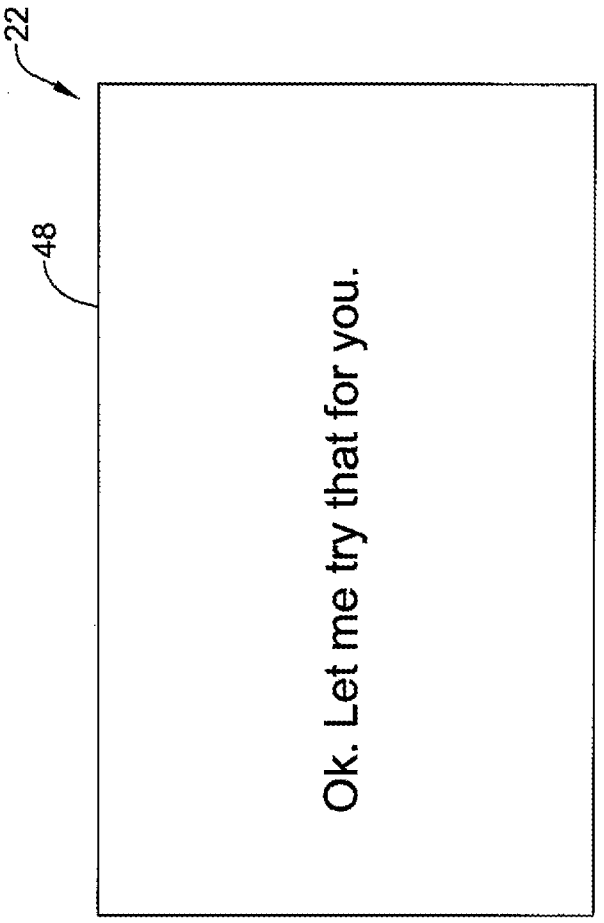

FIG. 21

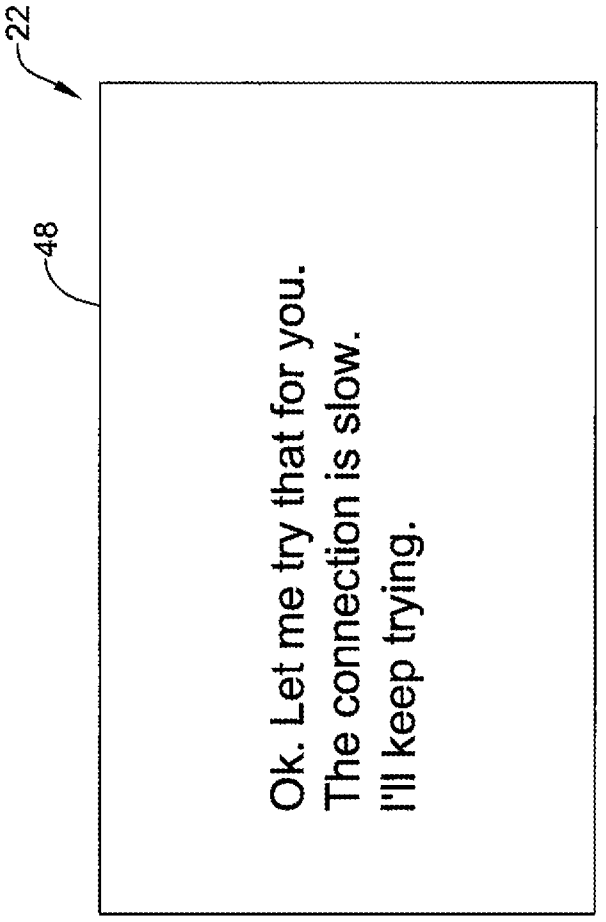
22
48
Ok. Let me try that for you.
The connection is slow.
I'll keep trying.

FIG. 22

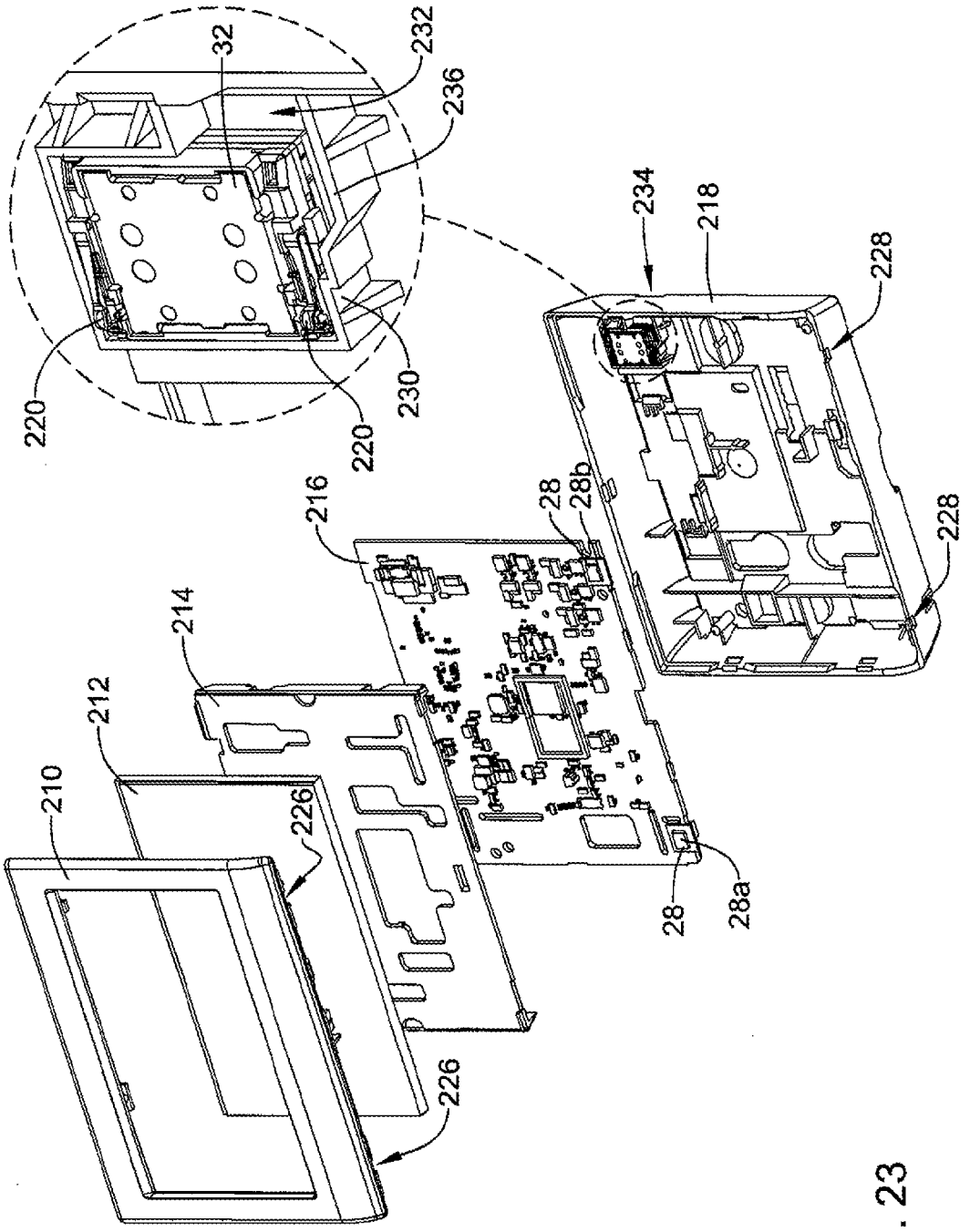
32
232
236
234
218
228
220
230
220
216
28
28b
228
214
212
210
226
28
28a
226

FIG. 23

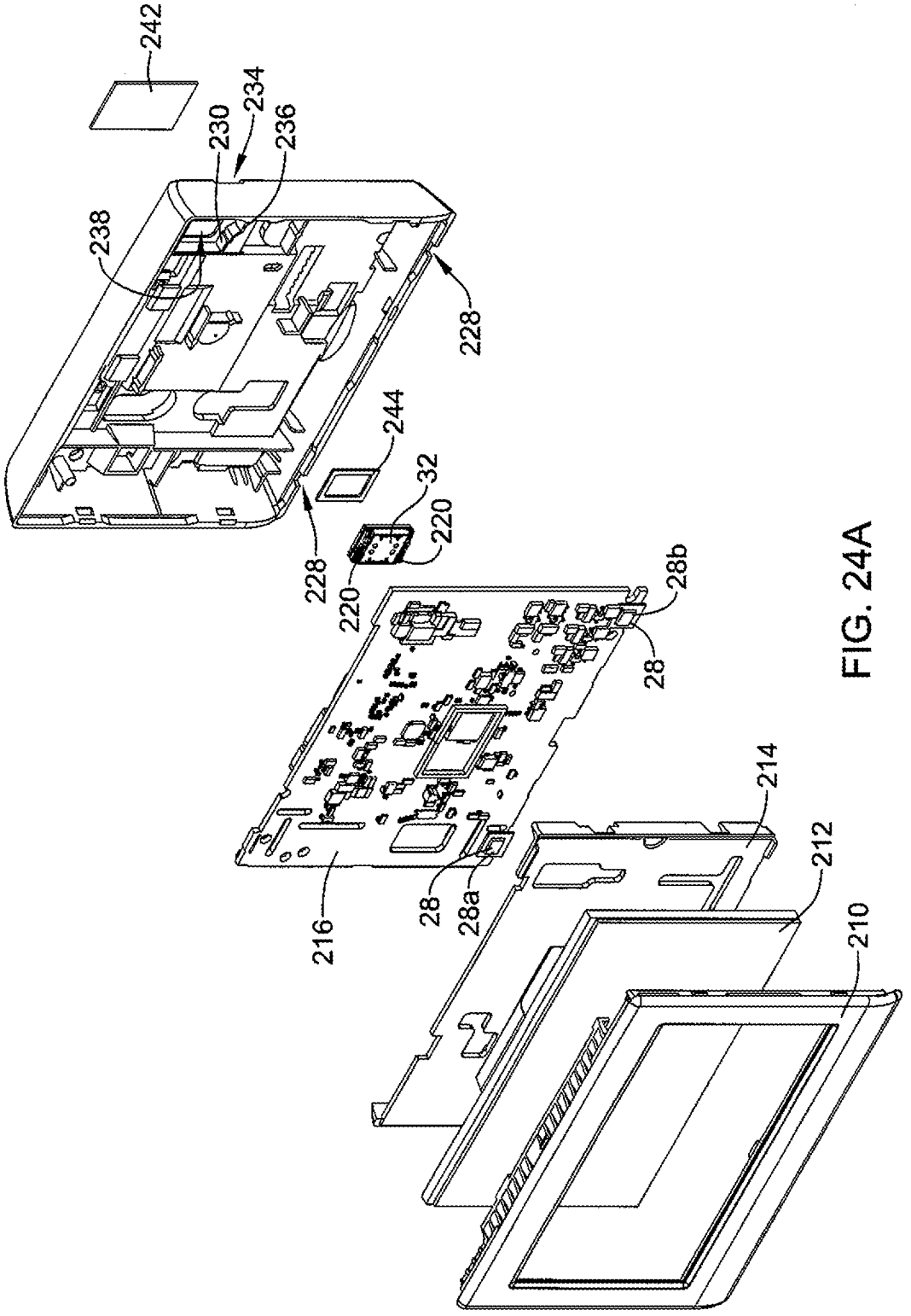
242
234
230
236
238
228
244
32
220
228
220
28b
28
214
212
216
28
28a
210

FIG. 24A

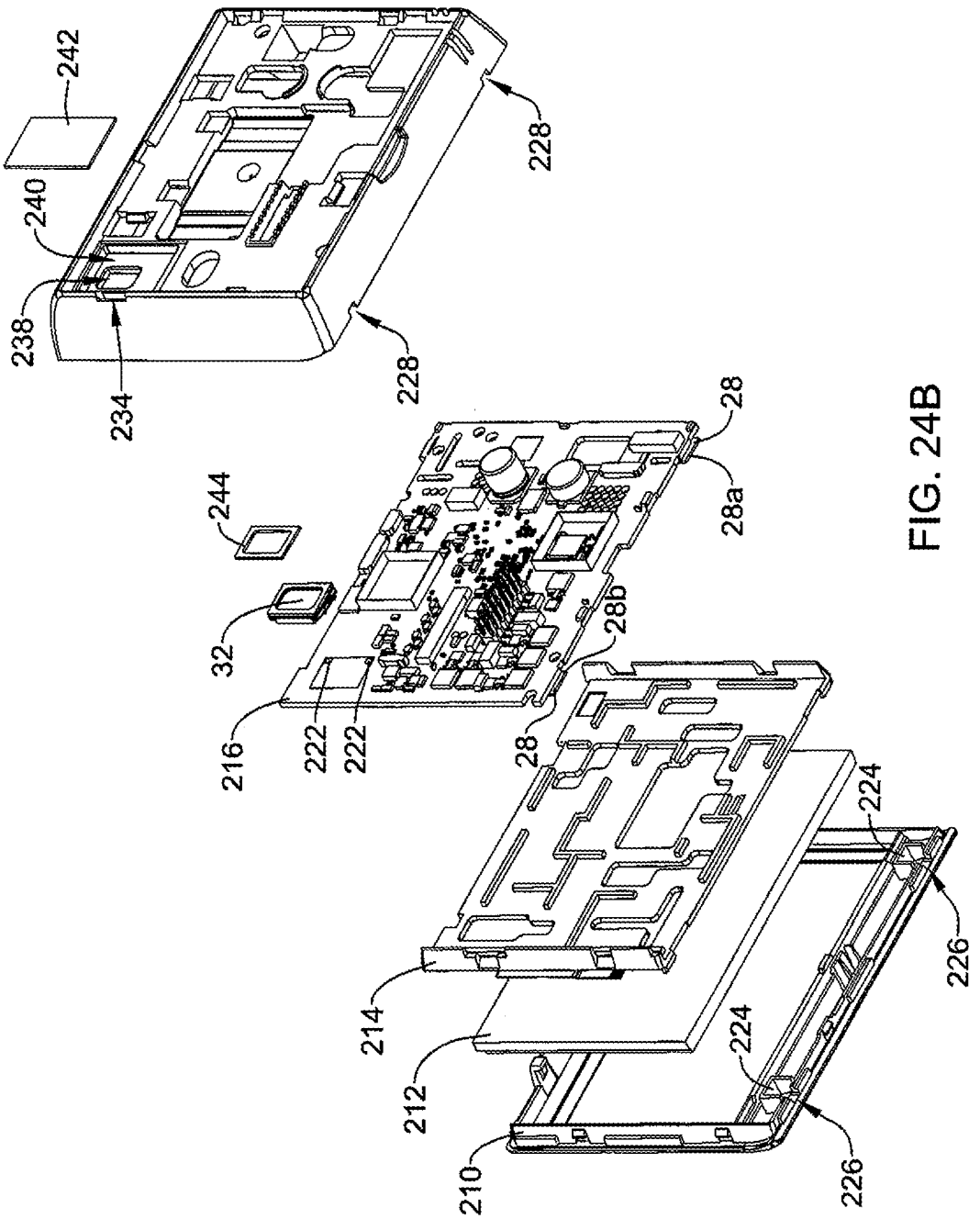
242
240
238
234
228
228
244
32
216
222
222
28
28b
28a
28
224
224
214
212
210
226
226

FIG. 24B

DEVICES AND METHODS FOR INTERACTING WITH AN HVAC CONTROLLER

[0001] This application claims the benefit of U.S. Provisional Application Ser. No. 61/868,441, filed Aug. 21, 2013, entitled "Devices and Methods for Interacting with an HVAC Controller", which is incorporated herein by reference.

TECHNICAL FIELD

[0002] The present disclosure relates generally to HVAC systems or building automation systems, and more particularly to HVAC controllers that accommodate and/or facilitate control of an HVAC system.

BACKGROUND

[0003] Heating, ventilation, and/or air conditioning (HVAC) systems are often used to control the comfort level within a building or other structure. Such HVAC systems typically include an HVAC controller that controls various HVAC components of the HVAC system in order to affect and/or control one or more environmental conditions within the building. Such HVAC controllers typically have a user interface for allowing a user to interact with the HVAC controller. The user interface is often integral with the HVAC controller housing, but in some instances, can be remote from the HVAC controller but in direct or indirect communication therewith, such as when using a user interface of a smart phone, tablet computer, personal computer, laptop etc.

SUMMARY

[0004] The present disclosure pertains generally to HVAC systems or building automation systems, and more particularly to controllers such as thermostats that accommodate and/or facilitate control of an HVAC system via voice control. In one illustrative embodiment, a thermostat may be controlled in accordance with a voice control system. The thermostat may include a housing configured to at least partially house a temperature sensor, a microphone, and a controller, among other components. The controller of the thermostat may be configured to identify a trigger phrase included in a voice message received by the microphone of the thermostat. In response to identifying the trigger phrase, the controller may perform an action.

[0005] In an illustrative method of operating and/or controlling a thermostat via a voice control mode, the thermostat may receive a voice message from a user and identify the voice message as including a trigger phrase. In response to identifying the voice message as including a trigger phrase, the thermostat may initiate the voice control mode and provide an audible indication that the voice control mode has been initiated.

[0006] In some instances, a method of operating and/or controlling a thermostat via a voice control system may include receiving a voice stream at the thermostat from a user and identifying a voice command in the voice stream. In an illustrative instance, the voice command may specify a parameter value without units. The method may further include translating the identified voice command into a thermostat command that includes the parameter value and units, where the thermostat command is in a format that is understandable by the thermostat. The thermostat command associated with the identified voice command may then be executed.

[0007] The preceding summary is provided to facilitate an understanding of some of the innovative features unique to the present disclosure and is not intended to be a full description. A full appreciation of the disclosure can be gained by taking the entire specification, claims, drawings, and abstract as a whole.

BRIEF DESCRIPTION OF THE DRAWINGS

[0008] The disclosure may be more completely understood in consideration of the following description of various illustrative embodiments in connection with the accompanying drawings, in which:

[0009] FIG. **1** is a schematic view of an illustrative HVAC system servicing a building or structure;

[0010] FIG. **2** is a schematic block diagram of an illustrative HVAC controller;

[0011] FIG. **3** is a schematic view of an illustrative thermostat interface network structure;

[0012] FIG. **4** is an interaction diagram showing illustrative interactions between a user, a thermostat, and the cloud;

[0013] FIG. **5** is a schematic flow diagram of an illustrative process of using a voice control system;

[0014] FIG. **6** is a schematic screen view of an illustrative screen of a thermostat;

[0015] FIG. **7** is a schematic screen view of an illustrative screen of a thermostat;

[0016] FIG. **8** is a schematic screen view of an illustrative screen of a thermostat;

[0017] FIG. **9** is a schematic flow diagram showing an elevated help feature;

[0018] FIG. **10** is an interaction diagram showing illustrative interactions between a user, a thermostat and the cloud during the first attempt of FIG. **9**;

[0019] FIG. **11** is an interaction diagram showing illustrative interactions between a user, a thermostat and the cloud during the second attempt of FIG. **9**;

[0020] FIG. **12** is an interaction diagram showing illustrative interactions between a user, a thermostat and the cloud during the third attempt of FIG. **9**;

[0021] FIG. **13** is a schematic screen view of an illustrative screen of a thermostat;

[0022] FIG. **14** is a schematic screen view of an illustrative screen of a thermostat;

[0023] FIG. **15** is a schematic screen view of an illustrative screen of a thermostat;

[0024] FIG. **16** is a schematic screen view of an illustrative screen of a thermostat;

[0025] FIG. **17** is a schematic screen view of an illustrative screen of a thermostat;

[0026] FIG. **18** is a schematic screen view of an illustrative screen of a thermostat;

[0027] FIG. **19** is a schematic screen view of an illustrative screen of a thermostat;

[0028] FIG. **20** is a schematic screen view of an illustrative screen of a thermostat;

[0029] FIG. **21** is a schematic screen view of an illustrative screen of a thermostat;

[0030] FIG. **22** is a schematic screen view of an illustrative screen of a thermostat;

[0031] FIG. **23** is an exploded perspective view of an illustrative thermostat that includes one or more microphones and one or more speakers;

[0032] FIG. **24***a* is an exploded front perspective view of an illustrative thermostat that includes one or more microphones and one or more speakers; and

[0033] FIG. **24***b* is an exploded back perspective view of an illustrative thermostat that includes one or more microphones and one or more speakers.

[0034] While the disclosure is amenable to various modifications and alternative forms, specifics thereof have been shown by way of example in the drawings and will be described in detail. It should be understood, however, that the intention is not to limit aspects of the disclosure to the particular illustrative embodiments described. On the contrary, the intention is to cover all modifications, equivalents, and alternatives falling within the spirit and scope of the disclosure.

DESCRIPTION

[0035] The following description should be read with reference to the drawings wherein like reference numerals indicate like elements throughout the several views. The description and drawings show several embodiments which are meant to illustrative in nature.

[0036] FIG. **1** is a schematic view of a building **2** having an illustrative building automation system **4**. While FIG. **1** shows a typical forced air type HVAC system as an illustrative building automation sub-system **12** of a building automation system **4**, other building automation sub-systems **12** of a building automation system **4** are contemplated including, but not limited to, security systems, lighting control systems, water heater systems (e.g., boiler systems), refrigerators, clothes washers, clothes dryer, ovens, garage doors, radiant heating systems, electric heating systems, cooling systems, heat pump systems, any other suitable sub-system **12** of building automation systems **4**, and/or portions thereof, as desired. In some cases, building automation systems **4** may include an internet gateway **20** (e.g., a modem or other device facilitating a communication link) or other device that may allow one or more of the HVAC components **6**, as described herein, to communicate over a wide area network (WAN) such as, for example, the Internet, and/or a device **20** that may allow one or more HVAC components **6** to communicate over any other network.

[0037] The illustrative HVAC system of FIG. **1** includes one or more HVAC components **6**, a system of ductwork and air vents including a supply air duct **10** and a return air duct **14**, and one or more building automation controllers **18** (e.g., HVAC controllers). The one or more HVAC components **6** may include, but are not limited to, a furnace, a heat pump, an electric heat pump, a geothermal heat pump, an electric heating unit, an air conditioning unit, a humidifier, a dehumidifier, an air exchanger, an air cleaner, a damper, a valve, and/or the like.

[0038] It is contemplated that a building automation controller(s) **18** may be configured to activate, deactivate and/or otherwise modulate the building automation sub-system(s) **12** thereof (e.g., HVAC components **6**) in a controlled manner (e.g., to control the comfort level in the structure or building **2** and/or otherwise operate electronic features of the building **2**). The building automation controller(s) **18** may be configured to control the building automation controller devices or building automation sub-systems **12** via a wired and/or wireless communication link **20**.

[0039] In some cases, the building automation controller(s) **18** may be a thermostat, such as, for example, a wall mountable thermostat or intelligent power switch (e.g., power switch for controlling appliances not equipped with communications capabilities and other appliances), but this is not required in all instances. An example thermostat may include (e.g. within the thermostat housing), or have access to, a temperature sensor for sensing an ambient temperature at or near the thermostat. In some instances, the building automation controller(s) **18** may be a zone controller (e.g., which may or may not be embodied in a thermostat), or may include multiple zone controllers each monitoring and/or controlling the comfort level within a particular zone in the building or other structure.

[0040] In the illustrative building automation system **4** shown in FIG. **1**, the HVAC component(s) **6** may provide heated air and/or cooled air via the ductwork **10**, **14** throughout the building **2**. As illustrated, the HVAC component(s) **6** may be in fluid communication with every room and/or zone in the building **2** via the ductwork **10** and **14**, but this is not required. In operation, when a heat call or command signal is provided by the building automation controller(s) **18**, an HVAC component **6** (e.g., a forced warm air furnace) may be activated to supply heated air to one or more rooms and/or zones within the building **2** via supply air ducts **10**. The heated air may be forced through the supply air duct **10** by a blower or fan **21**. In this example, the cooler air from each zone may be returned to the HVAC component **6** for heating via return air ducts **14**. Similarly, when a cool call or command signal is provided by the building automation controller(s) **18**, an HVAC component **6** (e.g. air conditioning unit) may be activated to supply cooled air to one or more rooms and/or zones within the building or other structure via supply air ducts **10**. The cooled air may be forced through the supply air duct **10** by the blower or fan **21**. In this example, the warmer air from each zone may be returned to the HVAC component **6** (e.g. air conditioning unit) for cooling via return air ducts **14**.

[0041] In some cases, the system of vents or ductwork **10** and/or **14** may include one or more dampers **24** to regulate the flow of air, but this is not required. For example, one or more dampers **24** may be coupled to one or more HVAC controller (s) **18**, and can be coordinated with the operation of one or more HVAC components **6**. The one or more HVAC controller(s) **18** may actuate dampers **24** to an opened position, a closed position, and/or a partially opened position to modulate the flow of air from one or more HVAC components **6** to an appropriate room and/or zone in the building or other structure. The dampers **24** may be particularly useful in zoned HVAC systems, and may be used to control which zone(s) receives conditioned air from the HVAC component(s) **6**.

[0042] In many instances, one or more air filters **30** may be used to remove dust and/or other pollutants from the air inside the building **2**. In the illustrative example shown in FIG. **1**, the air filter(s) **30** are installed in the return air duct **14**, and may filter the air prior to the air entering the HVAC component **6**, but it is contemplated that any other suitable location for the air filter(s) **30** may be used. The presence of the air filter(s) **30** may not only improve the indoor air quality, but may also protect the HVAC components **6** from dust and other particulate matter that would otherwise be permitted to enter the HVAC component **6**.

[0043] Depending upon the application and/or where the building automation system user is located, remote access and/or control of the building automation controller **18** may be provided, at least partially, over a first network (e.g. a local WiFi network) and/or a second network (e.g. a wide area network such as the Internet), as shown in FIG. **3**. In some instances, the first network and/or the second network may collectively be considered a network. A non-limiting example of a network connected building automation system is described in U.S. patent application Ser. No. 13/559,470, entitled METHOD OF ASSOCIATING AN HVAC CONTROLLER WITH AN EXTERNAL WEB SERVICE, filed Jul. 26, 2012, and hereby incorporated by reference in its entirety. Another non-limiting example of a network connected building automation system is described in U.S. patent application Ser. No. 13/875,213, entitled DEVICES AND METHODS FOR INTERFACING WITH AN HVAC CONTROLLER, filed May 1, 2013, and hereby incorporated by reference in its entirety. Yet another non-limiting example of a network connected building automation system is described in U.S. application Ser. No. 13/911,638 entitled INTERACTING WITH A CONTROL SYSTEM THAT IS CONNECTED TO A NETWORK, filed on Jun. 6, 2013, which is hereby incorporated by reference in its entirety.

[0044] In some instances, a user may use the building automation controller **18** (e.g., a thermostat **22**) to adjust a parameter of the building automation system **4** or to initiate an action of the building automation system **4** in a hands-free and/or eyes-free manner. A user might not be able to, or may not wish to, interact with a typical touch user interface of the thermostat **22** or of a device in communication with the thermostat **22** (e.g. smart phone) for one or more reasons. For example, in some cases, a user may not physically interact with the user interface of the thermostat **22** because of what they are doing (e.g., hands are full of items as they are leaving home), where they are located (e.g., they are in a different room than the room where the thermostat **22** is located), inconvenience, disability, and/or because of any other reason.

[0045] In some cases, the thermostat **22** or other building automation controllers **18** may include a hands-free and/or an eyes-free user interface **26** that utilizes voice control, sometimes with audible confirmations (e.g., two-way audible communication). As illustrated in FIG. **2**, the thermostat **22** may include one or more embedded or connected microphone(s) **28** and/or one or more embedded speakers or connected speakers **32**, along with support circuitry **36** to allow the thermostat **22** to receive, record, and/or playback sound. Further, the thermostat **22** may include a controller **47** that includes a processor **40** and a memory **44** to further facilitate receiving, recording, and/or playing back sound, along with facilitating other functionality of the thermostat **22**.

[0046] The microphone(s) **28** and the speaker(s) **32**, as shown for example in FIG. **2**, may be provided integrally with the thermostat **22** or otherwise connect to the thermostat **22** and may be in communication with the circuitry **36** of the thermostat **22** to communicate with other features of the thermostat **22** (e.g., the memory **44**, the processor **40**, the first communications port **50**, the second communications port **52**, and/or the user interface). In some instances, the speaker(s) **32** and/or the microphone(s) **28** may be integral with user interface **26** of the thermostat **22** and in some instances, the microphone(s) **28** and speaker(s) **32** may be separate from the user interface **26** of the thermostat **22**.

[0047] Illustratively, a plurality of microphones **28** may be provided integrally with, or in communication with, the thermostat **22**, where the plurality of microphones **28** may be provided to increase the functionality and/or improve the performance of the thermostat **22**. For example, a plurality of microphones positioned in or otherwise in communication with the thermostat **22** may allow for noise cancellation functionality at the thermostat **22** or in the cloud **56**, echo cancellation functionality at the thermostat **22** or in the cloud **56**, beam forming or spatial filtering functionality (e.g., the ability to determine from which direction a voice is coming and remove unwanted noise) at the thermostat **22** or in the cloud **56**, increase the area from which sound may be reliably obtained (e.g., especially when the microphones face different directions), and/or increase the functionality and/or improve the performance of the thermostat **22** in any other suitable way.

[0048] In some cases, the thermostat **22** may include a timer, sometimes implemented by circuitry **36** and/or processor **40**. The thermostat **22** may also include an input/output block (I/O block) **54** for receiving one or more signals from components of the building automation system **4** and/or for providing one or more control signals to components of the building automation system **4**. Alternatively, or in addition, the I/O block **54** may communicate with another controller, which may be in communication with one or more HVAC components of the building automation system **4**, such as a zone control panel in a zoned HVAC system, Equipment Interface Module typically located remote from the thermostat **22** and/or by or near one or more building system components, or any other building control device.

[0049] The illustrative thermostat **22** may include an internal temperature sensor **60**, but this is not required. In some cases, the thermostat **22** may communicate with one or more remote temperature sensors, humidity sensors, microphone/audio sensors, speakers, displays, and/or occupancy sensors located throughout the building or structure. Also, the thermostat **22** may communicate with a temperature sensor, humidity sensor, and/or other sensor located outside of the building or structure for sensing an outdoor temperature and/or humidity if desired.

[0050] The processor **40** of controller **47** may operate in accordance with an algorithm that controls or at least partially controls the operation of thermostat **22**. The processor **40** may, for example, operate in accordance with a control algorithm that controls one or more building components, and may set or control temperature set points, humidity set points, schedules, start and end times, window frost protection, operating modes, and/or the like. At least a portion of the control algorithm may be stored locally in the memory **44** of the thermostat **22** and, in some cases, may be updated and/or programmed from an external web service over one or more of the first network and the second network. The control algorithm (or portion thereof) stored locally in the memory **44** of the building automation controller **18** may be updated in accordance with a predetermined schedule (e.g. once every 24 hours, 48 hours, 72 hours, weekly, monthly, etc.), updated in response to published changes to the control algorithm, updated in response to a user's request, and/or updated at any other time, as desired. The updates to the control algorithm or a portion of the control algorithm stored in the memory **44** may be received from an external web service over one or more of the first network and the second network. In some cases, the portion of the control algorithm that is updated may

include settings such as set points, schedule times, and/or other settings, but this is not required.

[0051] In some instances, the processor **40** may operate according to a first operating mode having a first temperature set point, a second operating mode having a second temperature set point, a third operating mode having a third temperature set point, and/or the like, where the temperature set points may be different values or the same value. In some cases, the first operating mode may correspond to an occupied mode and the second operating mode may correspond to an unoccupied mode. In some cases, the third operating mode may correspond to a holiday or vacation mode wherein the building or structure in which the building automation system **4** is located is expected to be unoccupied for an extended period of time. In other cases, the third operating mode may correspond to a sleep mode wherein the building occupants are expected to be either asleep or inactive for a period of time. These are just some examples. It will be understood that the processor **40** may be capable of operating in additional or fewer modes, as necessary or desired.

[0052] The number of operating modes and/or the operating parameter settings associated with each of the operating modes may be established locally through a user interface, and/or through an external web service and delivered to the thermostat **22** via one or more of the first network and the second network where they may be stored in the memory **44** for reference by the processor **40**.

[0053] In some cases, the processor **40** may operate according to one or more predetermined operating parameter settings associated with a user profile associated with a particular individual user. The user profile may be stored in the memory **44** of the building automation controller **18** and/or may be hosted by an external web service and stored on an external web server **58**. The user profile may include one or more user-selected settings for one or more operating modes that may be designated by the user. For example, the processor **40** may operate according to a first operating mode having a first temperature set point associated with a first user profile, a second operating mode having a second temperature set point associated with the first user profile, a third operating mode having a third temperature set point associated with the first user profile, and/or the like, where the temperature set points may be the same value or different values. In some cases, multiple user profiles may be associated with the thermostat **22**. In certain cases, where two or more user profiles are associated with the thermostat **22**, the processor **40** may be programmed to include a set of rules for determining which individual user profile takes precedence for controlling the HVAC system when both user profiles are active.

[0054] The memory **44** of the thermostat **22** may be in communication with the processor **40**, as shown for example in FIG. **2** (e.g., through the circuitry **36**). The memory **44** may be used to store any desired information, such as the aforementioned control algorithm parameters, recorded voice messages, etc. The memory **44** may be any suitable type of storage device including, but not limited to, RAM, ROM, EPROM, flash memory, a hard drive, and/or the like. In some cases, the processor **40** may store information within the memory **44**, and may subsequently retrieve the stored information from the memory **44**. In some cases, the memory **44** may be part of the processor **40**.

[0055] In the illustrative example shown in FIG. **2**, the user interface **26**, when provided, may be any suitable user interface that permits the thermostat **22** to provide and/or solicit information, as well as to accept one or more user interactions. For example, the user interface **26** may permit a user to locally enter data such as temperature set points, humidity set points, starting times, ending times, schedule times, diagnostic limits, responses to alerts, and/or the like. In some instances, the user interface **26** may be a physical user interface that is accessible at the thermostat **22**, and may include a display **48**, a microphone **28**, a speaker **32**, and/or a distinct keypad. The display may be any suitable display. In some instances, a display may include or may be a liquid crystal display (LCD), and in some cases a fixed segment display or a dot matrix LCD display. In other cases, the user interface **26** may be a touch screen LCD panel that functions as both a display and keypad. The touch screen LCD panel may be adapted to solicit values for a number of operating parameters and/or to receive such values, but this is not required. In similar or other cases, the user interface **26** may be a dynamic graphical user interface. Alternatively, the user interface may be a voice only interface without a display and/or without non-voice input capabilities.

[0056] In some instances, the user interface **26** need not only be accessible to a user at the thermostat **22**. Additionally, or alternatively, the user interface **26** may be a virtual user interface **26** that is accessible via the first network and/or second network using a mobile wireless device or other device such as one of the remote devices described herein.

[0057] In some cases, the user interface **26** may include a hands-free, eyes-free user interface accessible through the microphone **28** and sometimes speaker **32** with optional feedback on the display **48**. For example, the processor **40** may be configured to receive and accept user input entered via an audio stream received via the microphone **28** (e.g., through interaction with one or more voice recognition engines), and may include user input related to temperature set points, humidity set points, starting times, ending times, schedule times, window frost protection settings, diagnostic limits, responses to alerts and/or any other suitable user input.

[0058] The present disclosure provides a mechanism where voice messages (e.g., contained in audio streams) recorded on a non-transitory computer readable medium (e.g., the memory **44**) and/or streamed may be used as the messaging system between a user and an Internet connected thermostat **22**. These voice messages, which may include voice commands, may be received, for example, from a user at the thermostat **22** and/or from a user via a remote device in the vicinity of the user issuing the voice commands. In one example, the thermostat **22** may be accessed and/or controlled through voice control (e.g., in a hands-free and/or eye-free manner) at the thermostat **22** with the microphone(s) **28** and the speaker(s) **32**, and/or accessed and/or controlled from a remote location (e.g., remote from the thermostat **22**) over the first network and/or second network with any suitable remote device **25** that has a microphone including, but not limited to, mobile phones including smart phones, PDAs, tablet computers, laptop or personal computers, wireless network-enabled key fobs, e-Readers and the like.

[0059] When a remote device **25** is used for accessing and/or controlling the thermostat **22** through voice control, it is contemplated that an application program may be downloaded and run on the remote device **25**. The application program may facilitate the recording and/or processing of voice commands from a user.

[0060] As shown in FIG. **2**, the illustrative thermostat **22** (e.g., building automation controller **18**) may include a first

communication port **50** for communicating over a first network (e.g. a first wireless network, a first wired network, a wireless LAN, a wired LAN, WAN, the internet, etc.), a second communication port **52** for communicating over a second network (e.g. a second wireless network, a second wired network, a wireless LAN, a wired LAN, a WAN or the Internet), and/or one or more other communication ports. In one example, the first communication port **50** may be a wired or wireless communications port, and may include a transceiver for sending and/or receiving signals in a wired or wireless manner over a first network (e.g., wired and/or wireless network). The second communication port **52** may be a wired or wireless communication port including a transceiver for sending and/or receiving signals in a wired or wireless manner over a second network (e.g., a second wired or wireless network). In some cases, the second communication port **52** may be in communication with a wired or wireless router or gateway for connecting to the second network, but this is not required. In some cases, the router or gateway may be integral to the thermostat **22** or may be provided as a separate device.

[0061] In many cases, the thermostat **22** may be configured to communicate wirelessly over the first network and/or second network (e.g., to communicate with a remote device **25** and/or the cloud **56**) via one or more wireless communication protocols including, but not limited to, cellular communication, ZigBee, REDLINK™, Bluetooth, WiFi, IrDA, dedicated short range communication (DSRC), EnOcean, and/or any other suitable common or proprietary wireless protocol, as desired. In some instances, the thermostat **22** may utilize an open or proprietary protocol to communicate with other devices (e.g., a web server **58** with data cache) and/or remote devices (e.g., mobile devices, voice reception boxes, etc.).

[0062] In order to expand the communication capabilities to include, voice, touch, mouse, keyboard, or other interfaces from remote locations, infrastructure in addition to typical remote devices **25**, the open or proprietary protocol, and/or the thermostat **22** may optionally be included in the networked infrastructure. Such additional infrastructure may include, for example, infrastructure of a cloud **56** (e.g., the Internet) and/or a web server **58** in the cloud, as shown in FIG. **3**.

[0063] The cloud or cloud infrastructure **56** (also known as, cloud computing) may include computing resources (e.g., hardware and/or software) capable of delivering a service over a network and capable of maintaining or storing a data cache. The data cache stored in the cloud infrastructure **56** may store information about the thermostat **22**. For example, the data cache may store a current status and/or settings of the thermostat **22**, the model number, type and/or other information about thermostat **22** and/or the user.

[0064] In some cases, the thermostat **22** may be programmed to communicate over the first network and/or the second network with an external web or cloud service hosted by one or more external web servers **58** in the cloud **56**. A non-limiting example of such an external web service is Honeywell's TOTAL CONNECT™ web service. Illustratively, the thermostat **22** may be configured to upload selected data via the second network to the external web service where it may be collected and stored on the external web server **58**. In some cases, the data may be indicative of the performance of the building automation system **4**, building control settings, and/or recorded voice commands to be interpreted by a voice recognition engine **46** of the external web service into commands understandable to the thermostat **22**. Additionally, the thermostat **22** may be configured to receive and/or download selected data, settings, and/or services including software updates from the external web service over the first network and/or the second network, and/or commands that are understandable to the thermostat **22**. The data, settings, and/or services may be received automatically from the web service, downloaded periodically in accordance with a programmed algorithm, downloaded in response to a user request, and/or received in any other suitable way.

[0065] In the non-limiting example shown in FIG. **2**, the thermostat **22** may be configured to receive and/or download from the cloud **56** or other source an HVAC operating schedule and/or operating parameter settings such as, for example, temperature set points, humidity set points, start times, end times, window frost protection settings, and/or the like. In some instances, the thermostat **22** may be configured to receive one or more user profiles having at least one operational parameter setting that is selected by and reflective of a user's preferences. In some instances, the thermostat **22** may be configured to receive local weather data, radar data, weather alerts and/or warnings, major stock index ticker data, and/or news headlines over the second network. These are just some examples.

[0066] In some instances, the external web server **58** may receive and accept the user input entered via the microphone **28**, and associate the user input with a user's account on the external web service and/or on the thermostat **22**. In some cases, if the user input includes changes to parameters associated with the existing control algorithm, including changes to any temperature set points, humidity set points, schedule, start and end times, window frost protection settings, operating modes, user profile changes, or any other suitable parameter, the external web server **58** may identify the corresponding parameter, as applicable, and transmit the updated parameter value to the thermostat **22** over the first network and/or second network, where it is received via the first communication port **50** and/or second communication port **52** of the thermostat **22** and stored in the memory **44** for execution by the processor **40**.

[0067] When voice messages or recordings are used to command the thermostat **22**, it is contemplated that any suitable voice recognition software (e.g., VLINGO™, DRAGON™, etc.) may be used. Illustratively, the processor **40** of thermostat **22** may be configured to implement a limited voice recognition engine that is not intended to recognize all or most of the words in a dictionary, but may be configured to identify limited words and phrases such as a trigger phrase included in a voice message and in some cases a limited command set. Such a configured processor **40** may allow the thermostat **22** to be controlled via voice control with fairly limited resources.

[0068] At least a portion of a voice recognition engine **46** may be included within the thermostat **22**. In FIG. **3**, the voice recognition engine **46** is shown internal to a casing of the thermostat **22** with a display **48**, microphone(s) **28**, speaker(s) **32**, and a control module **47** that may provide one or more control signals to control one or more HVAC components **6** of the building automation sub-system **12** (e.g., an HVAC system). The control module **47** may include the memory **44** and processor **40** of FIG. **2**, and the memory **44** may include instructions executable by the processor **40** to operate/communicate with the voice recognition engine **46**. In addition, or alternatively, the thermostat **22** may interact with a voice

recognition engine **46** (e.g., a voice recognition engine **46** on a web server or other server) via a communication link **42** (e.g., a wired or wireless communication link) and/or an internet gateway **20**, as also shown in FIG. **3**. In some cases, the voice recognition engine **46** on the thermostat **22** and the voice recognition engine **46** provided by a web server **58**, when both are provided, may cooperate to act like a single voice recognition engine **46** through communication over one of the communication ports **50**, **52**, or may act like separate voice recognition engines **46** in communication with one another over one or more of the communication ports **50**, **52**.

[0069] In some instances, the voice recognition engine **46** (e.g., including voice recognition software such as voice-to-text software and/or text-to-voice software) and translation software may be at least partially stored in the memory **44** of the thermostat **22**, such that the thermostat **22** may directly receive, identify, and translate a voice message (e.g., an audio or voice stream) into a thermostat **22** understandable command. Command phrase voice messages in a voice stream received by the thermostat **22** may be in a natural language format (e.g., a format not typically understood by a thermostat **22** as a command), such as a trigger phrase of "Hello Thermostat", a command of "Increase Temperature by 3 Degrees", or user intention commands in a natural language format such as "I am feeling cold".

[0070] In one example of a thermostat responding to a natural language voice message, a user may issue one or more natural language voice messages to the thermostat **22** via the microphone **28** when the user is in the vicinity of the thermostat **22**. The thermostat **22** may receive the natural language voice message, translate the voice message to a command understandable by the thermostat **22**. perform an action in response to the command, and/or respond to the received voice message with one or more of a natural language text based message, an audible natural language message as interpreted with text-to-voice voice recognition software, and/or a predetermined video message. Further, if the thermostat **22** communicates with or has one or more remote sensors, the voice recognition and translation software may additionally, or alternatively, be stored and operated in those sensors. For example, some thermostats **22** may have remote temperature sensors and/or remote control devices that may be placed in different rooms in the house, and the voice recognition engine (s) **46** may be at least partially embedded in one or all of these sensors and/or remote control devices.

[0071] Although a thermostat **22** may need to know it is to set a parameter at an exact value, such as the parameter value itself and parameter units (e.g., where the parameter is temperature, the parameter units may be degree F. (Fahrenheit) or degree C. (Celsius)), the thermostat **22** may always be selectively set to operate in a particular parameter unit. As a result, it can be expected that when a user **62** says a command related to a parameter (e.g., temperature), the user **62** is indicating that the parameter to be set is a parameter value consistent with the units by which the thermostat **22** is currently operating. The parameter units for one or more particular parameters (e.g., temperature, humidity, etc.) may be preprogrammed into the thermostat **22** at a manufacturer or selectively set by a user. Additionally, or alternatively, the thermostat **22** and/or the voice recognition engine **46** may apply different parameter units to different voice commands or when different users provide voice commands, where the thermostat **22** and/or voice recognition engine **46** may infer from the context of a voice command the appropriate parameter unit to apply to the voice command with or without a parameter unit actually recited in the voice stream that includes the voice command.

[0072] In operation, the thermostat **22** may exchange its parameter units with the voice recognition engine **46** via internal messaging, such that the voice recognition engine **46** will then be synchronized with the thermostat **22** as far as parameter units are concerned. Then, once a user **62** speaks a natural language voice command, the voice recognition engine **46** will be able to compose audio feedback with the right parameter units, translate the identified voice command without units to a thermostat command that includes a parameter value and parameter units, and/or update the thermostat's set point temperature without requiring the user to say the units in a command. This has the ability to decrease the data flow and improves internet connection requirements, while reducing the number words the user **62** is required to say to modify a temperature set point.

[0073] When the voice recognition engine **46** of a controller **47** of the thermostat **22** identifies a trigger phrase in a received natural language voice stream, the voice recognition engine **46** may initiate processing of the natural language voice stream. During processing of the natural language voice stream, the voice recognition engine **46** may identify one of a plurality of different commands following the identified trigger phrase. In response to identifying one of a plurality of predetermined commands following the trigger phrase, the voice recognition engine **46** may generate a thermostat command that is understandable by the controller and instructs the controller **47** to perform and/or execute the particular identified command.

[0074] Illustratively, one or more of the identification of a trigger phrase, the identification of one or more of a plurality of predetermined commands, and the generation of a thermostat understandable command may be performed by the thermostat **22** (e.g., via the voice recognition engine **46** and/or other components of the thermostat **22**). Alternatively, or in addition, one or more of the identification of a trigger phrase, identification of one or more of a plurality of predetermined commands, and the generation of a thermostat understandable command may be performed by the remote server **58** (e.g., via the voice recognition engine **46** and/or other feature of the remote server **58**).

[0075] To facilitate processing and/or interpreting a natural language voice stream, the voice recognition engine(s) **46** may include a natural language interpreter (e.g., the translation software or speech recognition module) that translates the received natural language voice stream into text via a voice to a text voice recognition engine. The natural language interpreter may then compare the text to a predefined trigger phrase, and if a match is found, the natural language interpreter may look for a subsequent command in the text. The natural language interpreter may compare the text following an identified trigger phrase to a plurality of predefined commands. If a match is found and a command is identified, and depending on the identified command, the natural language interpreter may look for one or more parameters following the identified command. For example, if a natural language voice stream includes "Thermostat, please change the temperature to 74 degrees". The word "Thermostat" may be the trigger phrase, the word "change" may be the command, and 74 may be the "parameter" for the "change" command. The natural language interpreter may scan the text and identify "Thermostat" as the trigger phrase. The natural language interpreter

may then scan the text following the word "Thermostat" for a valid predetermined command. When the natural language interpreter finds the command "change", the natural language interpreter may then begin looking for a numerical parameter for the "change" command. In this case, the natural language interpreter finds "74". The voice recognition engine **46** may then translate this into a command that is recognizable and executable by the controller **47** of the thermostat **22**, such as "SP=74 F". The controller **47** of the thermostat **22** may then execute the command and change the set point to 74 degrees F.

[0076] In some instances, the controller **47** of the thermostat **22** may initiate processing of the natural language voice stream by sending at least part of the natural language voice stream (e.g., the natural language stream following a detected trigger phrase) to the remote server **58** via an output port of one of the communication ports **50**, **52**. In response to sending at least part of the natural language voice stream to the remote server **58**, the thermostat **22** may receive via an input port of one of the communication ports **50**, **52** a thermostat command corresponding to the portion of the natural language voice stream sent to the remote server **58**.

[0077] In an illustrative example of utilizing a remote server **58** that includes at least a portion of the voice recognition engine **46** (e.g., a speech recognition module), the remote server may be configured to process the received portion of the natural language voice stream and then identify in the natural language voice stream one of a plurality of different predetermined commands for the thermostat **22**. Once a command is identified by the remote server **58**, the remote server **58** may generate a thermostat command and send the thermostat command back to the input port of one of the communication ports **50**, **52** of the thermostat **22** for execution by the controller **47** of the thermostat **22**.

[0078] In addition to or as an alternative to receiving a thermostat command from the remote server **58**, the thermostat **22** may receive a natural language voice message (e.g., an audio clip), a video clip, or other audio/visual clip from the remotely located portion of the voice recognition engine **46** via the input port of one of the communication ports **50**, **52**. The thermostat **22** may play a received natural langue voice message through the speakers **32** of the thermostat **22** and/or play the visual or video on the display **48** of the thermostat **22**.

[0079] Illustratively, the thermostat understandable commands may change the state of the thermostat **22** (e.g., change the set point, enter a temporary or permanent hold mode, switch the system mode to off, heat or cool mode, turn on the fan, etc.), read the current state of the thermostat **22** (e.g., requesting a current temperature, a current humidity level, the remaining filter life, etc.), program a programmable setting (e.g. a programmable schedule setting), display certain information on the display of the thermostat, such as weather information, stock information and or any other information, and/or may perform any other suitable function, as desired. In some instances, the translation software may be executed on the thermostat **22**, while in some other instances, the translation software may be executed on devices separate or independent from the thermostat **22**, such as at a remote server **58**, a remote device **25**, and/or on any other suitable device. In some cases, part of the translation software may be executed by the thermostat **22** or remote device **25** (e.g. translation of the voice message to text) while another part of the translation software may be executed on a remote server **58** (e.g. interpret the intent behind the message, and translate the message into a command specific to the thermostat **22** that can be understood and executed by the thermostat **22**), but these are just examples.

[0080] In some cases, when the thermostat **22** receives a thermostat understandable command, the thermostat **22** may not automatically accept the command, but may rather check the command against its settings (e.g., thermostat code). For example, the thermostat **22** may receive a thermostat understandable command related to a temperature set point (e.g., a command to change a set point temperature to a requested set point value, or any other command related to a temperature set point), the thermostat **22** may check the requested set point temperature against pre-set limits and accept the change only when the thermostat understandable command requests a change within the pre-set limits. If the command requests a change within the pre-set limits of the thermostat **22**, a generated thermostat understandable command may instruct the controller **47** to change the set point temperature to the set point value and the thermostat **22** may in some cases audibly report over the speakers **32** the new set point value (e.g., the new temperature set point) resulting from an action taken by the thermostat **22** in response to the acceptable command. If the requested set point value is outside of a pre-set limit, a generated thermostat understandable command may instruct the controller **47** to change the set point temperature to a set point value that is within the limits, and in some cases the thermostat **22** may provide an audible response (e.g., verbal response or some other audible response) over the speakers **32** indicating the command was not executed, why the command was not executed (e.g., it was requested to set a temperature set point at a value outside of pre-set temperature set point limits), and/or the new, if new, set point value. Such an audible response may aid a user **62** in not having to walk to the thermostat **22** to check for possible issues with the thermostat **22**. In some instances, the audible responses may facilitate an interview-like exchange with the user **62** by working with the user **62** to change pre-set limits of the thermostat **22** and/or to find an acceptable temperature set point or other action within the pre-set limits of the thermostat **22**.

[0081] In some cases, a command may be associated with a macro that changes a number of parameters and/or settings in response to the command. For example, a voice command of "Good Night Thermostat" may be translated into a series of two or more commands that are each recognizable by the thermostat **22**, such as a command that reduces the temperature set point to a sleep set point temperature, followed by a command that puts the fan into the circulate fan mode, followed by a command that turns the outside lights of the house off, followed by a command that turns the security system on.

[0082] In some cases, the number and type of commands that can be recognized and translated into commands may be intentionally limited. In addition, or alternatively, the format of the commands that can be recognized and translated into commands may be intentionally limited. This may make it easier for the translation software to recognize and translate the received voice commands into appropriate actions to be taken by the thermostat **22**. This may help increase the accuracy and/or reliability of the voice command system and improve the response time, especially when the hardware resources are limited such as in some thermostats **22**.

[0083] When formulating a command that is to be understandable by the thermostat **22**, the voice recognition software and/or translation software of voice recognition engine **46** may take into account one or more parameters (e.g., a

current set point temperature) stored in the data cache in the cloud infrastructure **56**. For example, where a natural language message received from a user indicates "I am cold", the voice recognition engine **46** may check the data cache for the current set point temperature of the thermostat **22** (e.g., seventy-two degrees) and provide a command to the thermostat **22** that sets the set point temperature at seventy-four degrees (e.g. two degrees warmer than the current setpoint temperature). Once the natural language message from the user has been translated into a command understandable by the thermostat **22**, the command may be sent to the thermostat **22** over a network having an open or proprietary protocol (e.g., an HVAC web services interface protocol, such as a web services application programming interface (API)), for example. As the translation may require space in the memory **44** for its storage and processing power by the processor **40** for its operation, maintaining the translation software of the voice recognition engine **46** in the cloud **56** or otherwise remote from the thermostat **22** (e.g., in a an area of a home or building separate from the particular location of the thermostat **22**) may in some cases be useful in reducing the memory and/or processing resources needed at the thermostat **22** itself. In some cases, the thermostat **22** may have sufficient memory and/or processing resources and all the processing can take place at the thermostat **22** if desired.

[0084] Although the voice recognition engine **46** has been primarily described with respect to a voice recognition engine **46** on the thermostat **22**, the voice recognition engine **46** or a portion of the voice recognition engine **46** may reside on a server **58** in the cloud **56** or on a server otherwise remote from the thermostat **22** (e.g., a server in the same building **2** as the thermostat **22** or in a different building than the thermostat **22**), as referred to above. The functionality of the voice recognition engine **46** may be the same or may differ depending on the location of the voice recognition engine **46** with respect to thermostat **22**. Factors that may determine functionality of the thermostat include, but are not limited to, the ability of a processor operating the voice recognition engine **46**, the size of the memory associated with the voice recognition engine **46**, etc.

[0085] The voice control system of the thermostat **22** may be initiated by the voice recognition engine **46** at the thermostat **22** after it recognizes an input, such as selection of a button or selectable option on a user interface **26**, a trigger phrase, a command, or any combination of a user interface **26** selection, a trigger phrase, and a command presented together or separately. As used herein, a "trigger phrase" is a unique word, a unique set of words, and/or a unique sound, that lets the thermostat **22** know via the voice recognition engine **46** that the user would like to give a command to the thermostat **22**. Trigger phrases may include, for example, "Hello, thermostat", "Hi, thermostat", etc. In some cases, the trigger phrase may be programmable by the user. As used herein, a "command" may, in one way or another, indicate what action (s) the user wants the thermostat **22** to perform.

[0086] In some instances, the voice recognition engine **46** of the thermostat **22** may be able to recognize trigger phrases such as "Thermostat", "Hello, thermostat" or "Hi, thermostat" in a voice stream, and take a specific action in response to recognizing the trigger phrase. In one example, if a user says "Thermostat Awake", the trigger phrase "Thermostat" may be recognized as well as the subsequent command "Awake". The command "Awake" does not have any associated parameters, and thus, the thermostat will not look for subsequent parameters. Instead, the "Awake" command will be translated into a command understandable by the thermostat so as to illuminate the display **48** of the thermostat **22**. In another example, if a user says "Thermostat Show Outside Temperature", the thermostat may show the outside temperature on the display **48** of the thermostat **22** (and illuminate the display if the thermostat **22** was in sleep mode, which is an example of an action taken that may be required to perform the requested action). The thermostat **22** may also or alternatively speak the outside temperature. Other commands that cause other actions are contemplated. In some cases, the thermostat may have a learning mode, which may allow the user to associate a user defined voice "command" with a particular action to be taken by the thermostat **22**.

[0087] In some cases, a user may define and/or the thermostat **22** (e.g., the voice recognition engine **46** or other feature) may learn a trigger phrase or command. For example, when the thermostat **22** is in a learning mode or in a different mode, a user may say a phrase or perform an action identifiable by the thermostat **22** (e.g., pressing a button and/or taking one or more other actions). The thermostat **22** may record (e.g., record at thermostat **22** or at a remote location) the phrase and/or action identifiable by the thermostat **22** and a user may associate one or more actions to be taken by the thermostat **22** (e.g., an action to be taken may be to place the thermostat **22** in a mode where it is waiting for a command after a trigger phrase is recognized, or one or more other actions) with the recorded phrase and/or action identifiable by the thermostat **22**. There thermostat **22** may then automatically start performing the action associated with the created trigger phrase or command when the trigger phrase or command is identified. Alternatively, or in addition, the thermostat **22** may send one or more recorded phrases and/or recorded actions along with the associated action to be taken by the thermostat **22** to a remote location for consideration and/or approval by a third party.

[0088] In some instances, the thermostat **22** may associate phrases selected by a user from one or more of multiple trigger phrases or actions identifiable by the thermostat **22** that are supported by the thermostat **22** (e.g., "Hello", "Hello, Thermostat", pressing of a physical button, etc.) with one or more actions to be taken by the thermostat **22** therewith. Illustratively, a user could select one of multiple trigger phrases available on (e.g., supported by) the thermostat **22** and associate, or have the thermostat **22** automatically associate, initiating and/or activating voice control of the thermostat **22** such that voice control is initiated awaiting a command when the selected trigger phrase is identified by the thermostat **22**.

[0089] The thermostat **22** or other device may record trigger phrases and/or commands spoken, but presently unsupported by the thermostat **22**, and save (e.g., at the thermostat **22** and/or at a location remote from the thermostat **22**) these recorded trigger phrases and/or commands for future analysis. In some cases, analytics and/or other analysis may be performed on the recorded trigger phrases and/or commands (e.g., audio files of these recorded trigger phrases and/or commands) and such an analysis may be utilized to add to a number of trigger phrases and/or commands supported by the thermostat **22** in response to perceived demand for certain functionality at the thermostat **22**.

[0090] Alternatively, or in addition to using trigger phrases, the thermostat **22** itself may initiate voice control or initiate some other action in response to one or more different trig-

gers. For example, a trigger that may initiate voice control of the thermostat **22** or some other action of the thermostat **22** may include, but is not limited to, a touch of a button, an activation of a proximity sensor, gesture sensing (e.g., via gesture sensing such as that commercially available by LEAP MOTION™), detection of a pattern of user interactions (e.g. a user provides a temporary hold for three mornings in a row, the thermostat may ask the user if the programmed schedule for the morning should be changed), and/or any other suitable trigger and/or action.

[0091] In instances when motion detectors and/or integrated infrared/optical sensors are included with and/or connected to the thermostat **22** (e.g. integral to the thermostat **22** or in communication with the thermostat **22**), these detectors/sensors may sense a presence of one or more people, animals, and/or objects in a monitored area and/or measure surface temperatures and/or other conditions in the home via the infrared or optical sensor, or other types of sensors. In one example, if on-wall sensors of the thermostat **22** were to detect a person is warm or cold, the thermostat **22** may ask the user **62** or a home resident if they would like to make it warmer or cooler. In some instances, the thermostat **22** may automatically audibly ask a user **62** if the temperature should be increased or decreased due to one or more sensed temperatures of one or more persons, animals, or objects in the monitored area, and a user **62** may audibly respond with a command identifiable by the voice control system of the thermostat **22**. Alternatively, or in addition, the thermostat **22** may automatically adjust the set points of the thermostat **22** in response to sensing a person, animal, or object is at a temperature level relative to a sensed ambient temperature (e.g., a threshold level) at which the thermostat **22** has been configured to make an adjustment. In some cases, the thermostat **22** may play a tone or display a message indicating it is sensing that a set point temperature should be adjusted in response to detecting a temperature of one or more persons, one or more animals (e.g., pets), and/or if one or more objects in use or non-use (e.g., an oven, freezer, etc.).

[0092] In some instances, voice control of the thermostat **22** may need the thermostat **22** to be connected to the internet via a wired or wireless connection or communication link **42** to utilize the voice recognition engine **46** in the cloud or for other purposes. When so provided, and in some cases, once the thermostat **22** or voice recognition engine **46** of the thermostat **22** identified a trigger phrase, the thermostat **22** may establish and/or check for an adequate connection to the internet **56** (e.g., a server in the cloud). In some instances, the thermostat **22** may need to connect to a service provider's server in the cloud (e.g., a web service such as Honeywell's TotalConnect™ server or another service provider's server), but this is not required in all embodiments. For example, when a voice recognition engine **46** is provided in the thermostat **22** that is capable of understanding trigger phrases and commands, the voice control of the thermostat **22** may not need to connect to the Internet **56** and/or a service provider's server in the cloud.

[0093] FIG. **4** is an interaction diagram showing illustrative interactions between a user, a thermostat, and a server in the cloud. Initially, a user **62** may speak a trigger phrase **64** (e.g., "Hello Thermostat"), and the local voice recognition engine **46** at the thermostat **22** may recognize the trigger phrase **64** and respond to the user **62** with a request for a command **66** (e.g., "Please say your command" or other request) or other audio clip or message over the speakers **32**. In response, the user may speak his/her command **68** (e.g., "Warmer", "I need help" or other command) and the thermostat **22** may record and/or stream **70** the voice message that includes the command **68** to a remote voice recognition engine **46** in the cloud **56** (e.g. on a server in the cloud) for recognition of the command.

[0094] In the example shown, the voice control system of thermostat **22** may stop recording audio and/or streaming audio to the cloud after a certain threshold has been met. For example, the thermostat **22** may stop recording audio and/or streaming audio to the cloud **56** after the voice control system in the cloud recognizes a command and notifies the thermostat **22** of the command, after a predetermined amount of time has elapsed since the voice control system of thermostat **22** started recording audio and/or streaming audio, after a predetermined amount of silence has elapsed, and/or after some other threshold has been met.

[0095] After receiving a recorded message and/or streamed message, the remote voice recognition engine **46** in the cloud **56** may recognize the command and change the command from a natural language audio format to a natural language text-based format, and then translate the natural language text of the user's command **68** into a command understandable by the thermostat **22**. The voice recognition engine **46** of the cloud **56** may then transfer **72** the command understandable by the thermostat to the thermostat **22**. In response to receiving the command from the cloud **56**, the thermostat **22** may take the action dictated by the command (e.g., increase a set temperature or decrease a set temperature) and send **74** thermostat understandable feedback text indicating the action taken by the thermostat **22** (e.g., indicating the thermostat **22** increased the set point temperature by two degrees to seventy-two) to the voice recognition engine **46** in the cloud **56**. The voice recognition engine **46** in the cloud may then send **76** a message to the thermostat **22** telling the thermostat **22** to play an audible natural language message **78** (and/or display a visual message on the display **48** of the thermostat **22**) indicating the action taken by the thermostat **22**. The thermostat **22** may then play the audible natural language message **78** (e.g., "Temperature set to seventy-two" or "Setting temperature to seventy-two") and/or display the text-based message on the display of the thermostat **22**. In some cases, the message **76** may be a voice message (e.g., a wave file, MP3 or other file) that can be directly played by the thermostat **22**. In other cases, the message **76** may be a text based message, and a text to voice translator may be in the thermostat **22** that translates the text based message to a voice message before playing the voice message to the user. In some cases, if voice control of the thermostat **22** is already initiated at the time of speaking a command (e.g. via a previous recognized trigger phrase), the trigger phrase may be omitted.

[0096] Prior to utilizing the voice control system of the thermostat **22**, the voice control system may need to be configured on the thermostat **22**. This configuration may be performed by an installer of the thermostat **22**, a user of the thermostat **22**, and/or may be set up at the time of assembly prior to end-user use of the thermostat **22**. In some instances, the thermostat **22** may automatically initiate voice control configuration upon initial use and/or the configuration may be initiated by a user. To facilitate a user configuring voice control of the thermostat **22** without the need to review a user manual, the thermostat **22** may provide audio and/or visual help clips.

[0097] At any time during configuration and/or use of the voice control system, a user **62** may ask the voice control system for "help", and the voice control system may provide assistance. Illustratively, the voice recognition engine **46** may locally detect a voice command indicating the user needs help (e.g., "Help", "Need help with voice commands", etc.). In response to the locally recognized help command, the thermostat **22** may play a pre-recorded clip giving the user hints and/or instructions on how to operate the thermostat **22** and/or the voice control system of the thermostat **22**. For example, when the thermostat **22** is not connected to the Internet and a user says a trigger phrase (e.g., "Hello thermostat", etc.) and/or a voice command (e.g., "I need help", etc.), such as "Hello thermostat, I need help", "Hello thermostat, could you help me?", "Hello thermostat, please advise", "Hello thermostat, full help", etc., the thermostat may respond with a first recording stating: "To enable voice recognition, you have to connect the thermostat to a Wifi network. Once you are done connecting, you can start operating the thermostat using voice commands", and/or a recording stating: "First, say hello thermostat and a wait a second. When asked, say your command". To list all possible commands, it is contemplated that a user may say: "Hello thermostat, list commands". In another example, when the thermostat **22** is connected to the internet and a user states a trigger phrase and/or a command, such as "Hello thermostat, I need help", "Hello thermostat, could you help me?", "Hello thermostat, please advise", etc., the thermostat **22** may play a recording that provides help, such as "First, say hello thermostat and a wait a second. When asked, say your command" or any other suitable recording. In another example, when the thermostat **22** is connected to the internet and a user states a trigger phrase and/or a command, such as "Hello thermostat, list commands", etc., the thermostat **22** may play a recording stating, for example: "You can say one of these voice commands: Warmer, Cooler, Set temperature to X degrees, What is the weather . . . ". In another example, when the thermostat **22** is connected to the internet and the user **62** states a trigger phrase and/or a command, such as "Hello thermostat, full help", the thermostat **22** may play these and/or other help clips. In yet another example, when the thermostat **22** is connected to the internet and a user **62** says a trigger phrase and/or a command "Hello thermostat, trouble shoot", "Hello thermostat, solve issues", etc., the thermostat **22** may play a recording such as: "Make sure your thermostat is connected to a Wifi network. Speak slowly and clearly. Each command has to start with a 'Hello thermostat' phrase—e.g., 'hello thermostat, make it warmer'". These are just some examples of help phrases commands a user **62** may use and some example recordings the thermostat may provide in response to the users help command. If voice control of the thermostat **22** is already initiated at the time of speaking a command (e.g. via a previous recognized trigger phrase), the trigger phrase may be omitted in some instances.

[0098] In some instances, in addition to or as an alternative to being played at user initiation, these recorded help hints and instructions may be played or displayed automatically when, for example, a feature is enabled on the thermostat **22** to let the user **62** know how to operate the enabled feature without having to search a user guide or other manual for instructions. This is one example of context sensitive help. It is contemplated that in some cases, the selection of a particular help clip to play may be based on the context of a particular user interaction.

[0099] In some instances, the thermostat **22** may be controlled with a voice control system by following a process **100**, such as the process shown in FIG. **5**. In the illustrative process **100**, to activate voice control of the thermostat **22**, a user may speak a voice stream that includes a voice control trigger phrase into the microphone **28** of the thermostat **22**, as shown at **101**, and the thermostat **22**, using a voice control engine **46** that may be constantly or occasionally listening for a trigger phrase, may identify the voice control trigger phrase as shown at **102** within the received voice stream. In some cases, the thermostat **22** may include a voice recognition engine **46** which may process audio data from the microphone(s) **28** to identify the trigger phrase(s). In some cases, a voice message may be recorded by the thermostat **22** and sent to a voice recognition engine **46** located in the cloud **56** or streamed from the thermostat **22** to the voice recognition engine **46** located in the cloud **56**, where the voice message may be remotely processed to identify the trigger phrase(s).

[0100] When the thermostat **22** is turned on or operating in any manner, the thermostat **22** may always be listening for a trigger phrase, as referred to above. In other instances, once voice control is turned on in the thermostat **22**, the thermostat **22** may always be listening for a trigger phrase. Alternatively, the thermostat **22** may be set to listen for a trigger phrase after a certain action (which may be an inaction), after detecting a gesture or other movement, after a certain amount of time, and/or after any other suitable condition, as desired. In some cases, the thermostat **22** may be listening for a trigger phrase when it is in a sleep state and when it is in a wake state.

[0101] The trigger phrase identification sensitivity factor (e.g., an adjustable scale) of the voice control system of the thermostat **22** may be adjusted to balance false positives (e.g., where a false positive occurs when the voice control system thinks a trigger phrase was heard, but no trigger phrase was actually spoken) against false negatives (e.g., where a false negative occurs when the voice control system does not recognize a trigger phrase when a trigger phrase was actually spoken) in order to improve the accuracy of trigger phrase recognition. In order for the voice control system to perform such balancing, it can be beneficial for the voice control system to know when a false positive occurs and/or when a false negative occurs. In some instances, the voice control system may have commands that when spoken by a user **62** indicate to the voice control system that a false positive has occurred (or a false negative has occurred). Such commands (e.g., feedback) indicating when false positives and/or false negatives occur may be verbal commands (e.g. in response to a false positive, the user says "never mind"), may be an electrical command provided over a communications interface (e.g., serial, Ethernet, etc.), may be provided by physical interaction with the thermostat **22** (e.g. a button press), may be determined by context (e.g. in response to a false positive, no command follows), and/or may be provided in any other suitable manner. In response to being told when false positives occur (and/or when false negatives occur), the voice control system may automatically determine or suggest when a rebalancing of trigger phrase sensitivity might improve the performance of the system, and may make those changes automatically or on command.

[0102] After the thermostat **22** processes audio data and recognizes a trigger phrase, the thermostat **22** may perform an action, such as establishing and/or testing its connection to the Internet (e.g., testing its connection to a server in the cloud), as shown at **104**. If there is "No connection", and the

voice recognition engine **46** on the thermostat **22** is unable to process natural language commands (e.g., such as commands unrecognizable by the thermostat **22**) into commands understandable by the thermostat **22**, the thermostat **22** may indicate it is unable to operate via voice control and may default to a thermostat home screen **99** (e.g., see FIG. **19**) or other screen indicating voice control is unavailable (e.g., see FIG. **6**). In instances where there is "No connection", and the voice recognition engine **46** on the thermostat **22** is configured to process natural language commands into commands understandable by the thermostat **22**, the voice control of the thermostat **22** may continue. In such instances where the local voice recognition engine **46** of the thermostat **22** is capable of processing natural language commands into commands understandable by the thermostat **22**, the voice control system may be configured to use a remote voice recognition engine **46** when an internet connection is present and configured to use the local voice recognition engine **46** when there is no internet connection. In some instances, when there is "No connection", the local voice recognition engine **46** may process natural language commands into commands understandable by the thermostat **22**, but at a reduced functionality relative to the remote voice recognition engine **46**, until the connection is restored. For example, the local voice recognition engine **46** may only process a subset of commands relative to the remote voice recognition engine **46**, such as simpler commands.

[0103] In addition to checking its connection to the Internet and/or the cloud **56**, the thermostat **22** may perform one or more other operations or take one or more other actions in response to recognizing a trigger phrase. Other actions the thermostat **22** may take in response to identifying a trigger phrase may include, but are not limited to, initiating a voice control mode, emitting an audible message through the speaker(s) **32** of the thermostat **22** (e.g., where the audible message includes an indication that the voice control mode has been initiated), transitioning the thermostat **22** from a sleep state to a wake state, initiating a voice control mode, attempting to identify a voice command following the identified trigger phrase, displaying a home screen on the display **48** of the thermostat, performing one or more other actions, and/or performing any combination of the recited actions or one or more other actions.

[0104] As discussed, when the thermostat **22** has entered a sleep mode (e.g., a mode where the display **48** is powered down or is not illuminated), such as after a period of non-use or in response to a command, the thermostat **22** may awake from the sleep mode upon recognizing a trigger phrase (e.g., the thermostat may be set to always listen for a trigger phrase, even in a sleep or low power mode). Illuminating the display **48** of the thermostat **22** in response to recognizing a trigger phrase may allow a user to view the thermostat's actions taken when interacting with the thermostat **22**, may allow a user to view the home screen or other default screen from across a room, and/or facilitate a user's interaction with the thermostat **22** (e.g. display that the thermostat **22** did or did not recognize the trigger phrase and/or that it is or is not taking an action in response to a voice command provided in the voice stream with the trigger phrase or in a voice stream separate from one including the trigger phrase).

[0105] Transitioning from a sleep state to a wake state may include transitioning from a lower power state of a sleep state for the thermostat **22** to a higher power state of a wake state for the thermostat **22**. In one example, the display **48** of the thermostat **22** may include a backlight and/or other lighting system and the backlight and/or other lighting system may be turned off or dimmed when the thermostat **22** is in a sleep. Then, when the thermostat **22** is in a wake state, the backlight or other lighting system may be turned on or dimmed less than when the thermostat **22** is in a sleep state, which may be an indication that a voice control mode has been activated by the thermostat **22**. As a result of entering the wake state, the thermostat **22** may be in a higher power state than when the thermostat **22** is in a sleep state and a lower power state. Additionally or alternatively, other power systems may be turned on and/or powered up when the thermostat **22** switches from sleep state to a wake state, which may affect the power usage levels of the thermostat **22**. In some cases, the thermostat may be battery powered.

[0106] As shown at reference **106** in FIG. **5**, if the thermostat **22** is unable to connect to the Internet or a particular server connected to the Internet, the thermostat **22** may audibly speak through the speaker **32** and/or visually display on the display **48** a message such as "No connection. I'm sorry. For some reason, I cannot connect to the cloud. I hope I can help next time", or any other suitable word, phrase, and/or noise. An illustrative display **48** of the thermostat **22** displaying a text-based "no connection" message on the display is shown in FIG. **6**.

[0107] If the thermostat **22** is able to connect to the Internet, the thermostat **22** may audibly speak a command request through the speaker **32** and/or visually display **108** on the display **48**. The command request may be, for example, "How can I help?", "How can I help? Try saying . . . 'Make it Warmer' or 'Make it Cooler' or 'Set temperature to degrees'", or any other suitable message. Illustrative displays **48** of the thermostat **22** displaying text-based commands that request messages are shown in FIGS. **7** and **8**.

[0108] Once the thermostat **22** has indicated it is ready to accept a command by audibly and/or visually requesting information as to how the thermostat **22** may assist the user, a user may state a command word or phrase, as shown at **110** in FIG. **5**. Alternatively, or in addition, the thermostat **22** may recognize a voice command in a same voice stream with a trigger phrase and indicate it is processing the voice command.

[0109] When the thermostat **22** has requested a command from the user, the thermostat **22** may determine if it receives a translated command within an allotted time (e.g., within 5 second of requesting information, within 10 seconds of requesting information, within 20 seconds of requesting information, within 30 second of requesting information, within 45 seconds of requesting information) as shown at **112**. If a user fails to state a recognizable command phrase in a set amount of time after the thermostat **22** requests information, the thermostat may time-out and the thermostat **22** may audibly speak and/or visually display **114** a message indicating voice control is ending **71** (e.g., "Timed out" and/or "Goodbye", see FIG. **20**) and/or play a timed out tone.

[0110] If the user states a recognized command phrase within a specified amount of time, before some terminating threshold, at item **116** the thermostat **22** may attempt to send the identified command phrase to the Internet (e.g., a server in the cloud **56** identified by an Internet Protocol (IP) address), as shown in FIG. **5**. If the thermostat **22** is unable to send the command phrase to the particular destination connected to the Internet (e.g., a service provider's cloud service), the thermostat **22** may audibly speak and/or visually display **118**

"Cloud connection failure", "No connection", or "I'm sorry. For some reason I cannot connect to the cloud. I hope I can help next time" or any other suitable phrase (see FIG. **6**). If the thermostat **22** successfully sends the command phrase to the particular destination connected to the Internet (e.g., a service provider's cloud service), the cloud service may attempt to process **120** the command phrase in the cloud **56**. In response to processing the command phrase in the cloud **56**, the thermostat **22** may play an audible tone (e.g., a processing tone) and/or display "One Moment Please" (see FIG. **15**), "OK. Let me try that for you." (see FIG. **21**), "Ok. Let me try that for you. The connection is slow. I'll keep trying" (see FIG. **22**), or any other similar phrase as desired. In some cases, to indicate to a user that the command is being processed, the thermostat **22** may play a tone or display **122** a processing message or icon for a set period of time (e.g., 2 second, 4 seconds, 10 seconds). In some instances, the tone or message may be displayed for a set period of time regardless of how long it takes to process the command phrase, or, alternatively, the thermostat **22** may play the tone or display **122** a processing message for the amount of time needed to process the command phrase.

[0111] In some instances the cloud service may not understand the command provided to it by the thermostat **22** and/or remote device **25**, and may then provide elevated help to the user, as discussed herein (see FIG. **9**). In response to the first time the cloud service is unable to recognize a command phrase, the thermostat **22** (or remote device **25**) may audibly speak and/or display **124** "Unrecognizable command—1st attempt" or "No Recognition" or "I'm sorry can you try again?" or any other suitable phrase, and request a user to speak **110** a further or repeated command phrase (see FIG. **10**). In response to a second time in a row that the cloud service is unable to recognize a command phrase, the thermostat **22** (or remote device **25**) may provide audible (and/or visual) feedback to the user **62** on how to state a command (e.g., "You can say . . . Warmer, Cooler"), and request that the user speak a further or repeated command phrase **110** (see FIG. **11**). In response to a third time in a row the cloud service is unable to recognize a command phrase, the thermostat **22** may audibly speak and/or display **126** "Unrecognizable command—b 3rd attempt (final)" or "No Recognition" or "Voice control terminated" or "Goodbye" or any other suitable phrase (see FIGS. **12** and **20**). Although three levels of attempting to present a processable or understandable command phrase is presented before the voice control system terminates, any number of levels greater than or less than three (3) levels may occur before the thermostat **22** ends the voice control process. In some cases, after the first, second and/or third attempt, the thermostat **22** (or remote device **25**) may automatically display a visual help message, or provide an audio and/or video help message, to assist the user in properly providing a recognizable command.

[0112] Once a command phrase is received, recognized and processed, the thermostat **22** may audibly speak and/or visually display **130** "Confirmation", or may indicate the result of the command or the action taken by the thermostat **22** ("The Temperature Setting Has Been Increased to 74 Degrees" or "New temperature is set" (see FIG. **16**)), if desired.

[0113] In instances where the voice recognition engine **46** in the thermostat **22** does not recognize or may not be able to interpret a spoken command as being a command, the thermostat **22** may speak and/or display "How can I help? Try saying . . . 'Make it Warmer' or 'Make it Cooler' or 'Set temperature [1 . . . 10] degrees warmer/cooler'" or any other suitable message. An illustrative display **48** of the thermostat **22** displaying a text-based message after a first failed recognition of a command is shown in FIG. **8** (where the display of FIG. **8** may be displayed initially when requesting a command and/or after a first failure of identifying a command).

[0114] In some instances, assistance from the thermostat **22** may be provided when the thermostat **22** recognizes, on its own, that a user needs help in saying a command, configuring the thermostat **22**, and/or otherwise operating the thermostat **22**. In some instances, the thermostat **22** (e.g., the voice recognition engine **46**) may recognize a predetermined audible trigger via the microphone **28** as indicating a user needs help or assistance. For example, an audible trigger may include an audible trigger phrase (e.g., a trigger phrase including the term "HELP" or other wording) and/or an audible trigger phrase followed by one or more of a plurality of audible trigger commands. Alternatively or in addition to identifying an audible trigger, the thermostat **22** may sense that a user may need help assistance and/or assistance in view of one or more actions (e.g., including inactions) by user when interacting with the thermostat **22**. For example, the thermostat **22** may determine a user may need assistance or help when an audible trigger phrase is detected, but an audible command is not detected following the audible trigger phrase. In some cases, a user may manually interact with one or more buttons of the thermostat **22** (e.g., where buttons of the thermostat **22** may include one or more touch areas on the display **48**, one or more push buttons, and/or touch areas separate from the display **48**) through which the thermostat **22** may identify that the user needs help and/or assistance interacting with the thermostat.

[0115] When the thermostat **22** recognizes a user needs assistance or help, the thermostat **22** may automatically provide assistance via a helpful visual message, a helpful audio message (e.g., an audio clip), a helpful video message (e.g., a video clip), and/or the like. Whether the thermostat **22** recognizes an audible trigger or an action taken by a user, the voice recognition engine **46** may provide the same and/or different visual clips, audio clips, and/or video clips in response to different identified audible triggers and/or actions by a user. In some instances, the thermostat **22** may play one or more helpful visual messages, audio messages, and/or video messages in response to and corresponding to an activation of a feature of the thermostat **22** that was previously disabled or deactivated (e.g., where the thermostat **22** may have one or more disabled features at any given time that are capable of being enabled and/or activated), and/or when turning on the thermostat **22** (e.g., where the played one or more helpful visual messages, audio messages, and/or video messages may correspond to assisting a user with initial setup of the thermostat **22** or one or more features thereof).

[0116] In one example of the thermostat **22** assisting a user, the thermostat **22** may identify a user having trouble interacting with the voice control system, and may provide elevated levels of help depending on the circumstances, as illustrated in FIGS. **9-12**. In some instances, when the thermostat **22** recognizes that a user has failed to successfully communicate a command during a first attempt **80**, the thermostat **22** may provide audio (and/or visual) feedback (e.g., "Please try again" or "I'm sorry. Can you try again?", such as shown in FIG. **13**). If the thermostat **22** recognizes that a user has failed to successfully communicate a command during a second attempt **82**, the thermostat **22** may provide audible (and/or

visual) feedback to the user **62** on how to state a command (e.g., "You can say . . . Warmer, Cooler"). If the thermostat **22** recognizes that a user has failed to successfully communicate a command during a second attempt **82**, the thermostat **22** may provide audible (and/or visual) feedback to the user **62** that the voice control system is quitting and the problem will be noted (e.g., "Problem will be recorded"). Although FIG. **9** indicates each attempt at stating a command begins with a user **62** reciting a trigger phrase **64**. However, in some cases, after a first attempt **80**, it may not be necessary to state a trigger or trigger phrase **64** because voice control has already been initiated.

[0117] FIG. **10** shows a schematic flow diagram of interactions between the user **62**, the voice recognition engine **46** on the thermostat **22**, and the voice recognition engine **46** in the cloud **56** during a first attempt **80** of stating a command. As discussed above, to initiate voice control of the thermostat **22**, the user **62** may say a trigger phrase **64** and the voice recognition engine **46** at the thermostat **22** may recognize the trigger phrase **64**. In response to recognizing the trigger phrase (or other trigger), the thermostat **22** may play an audible natural language message **66** (e.g., "Please say your command") and/or display a natural language text-based message **86** requesting the user **62** to say a command (e.g., "Speak a Voice Command"), as shown in FIG. **14**, along with an indication that the thermostat **22** is recording **88** and/or streaming audio, and sometimes a display of the current set point temperature **90**. In some instances, the command spoken by the user **62** may then be transferred (e.g., recorded and/or streamed) to the voice recognition engine **46** in the cloud **56** or otherwise remote from the thermostat **22** for processing and recognition as a command. FIG. **15** shows an illustrative screen of the display **48** of the thermostat **22** displaying an indication that the voice command is being processed **89** (e.g., "Processing Voice Command") and a text-based message asking the user **62** to wait while the command is being processed **91** (e.g., "One Moment Please"). If the spoken command from the user **62** is recognized, a message may be sent to the thermostat **22** from the cloud **56** instructing the thermostat **22** to perform an action in response to the command and to audibly play **78** and/or visually display an indication of the action taken by the thermostat **22**. FIG. **16** and FIG. **17** show illustrative screens of the display **48** of the thermostat **22** displaying indications that the voice command was recognized **92** (e.g., "Voice Command Recognized", "Information Command") and a message of the action taken **94** by the thermostat **22** (e.g., "New temperature is set", "Playing Result Feedback), where FIG. **16** is a screen in response to a temperature set point related command and FIG. **17** is a screen in response to a non-temperature set point related command (e.g. information command).

[0118] If the command **68** from the user **62** is not recognized by the voice recognition engine **46** in the cloud **56**, the remote voice recognition engine **46** may send a message to the thermostat **22** to audibly play and/or visually display a message **69** indicating the command **68** was not understood, and to ask the user **62** to try speaking the command again. FIG. **13** shows an illustrative screen of the display **48** of the thermostat **22** displaying a message **69** that indicates that the command **68** was not understood, and asking the user **62** to try speaking the command again (e.g., "I'm sorry. Can you try again?"). FIG. **18** depicts an alternative illustrative screen of the display **48** of the thermostat **22** displaying a message **96** that indicates that the command was not understood, while providing a text message with example commands **98** (e.g., "Hello Thermostat, Make it Warmer/Cooler", "Hello Thermostat, Make it Much Warmer/Cooler", and "Hello Thermostat, Make it [1-10] degrees Warmer/Cooler").

[0119] FIG. **11** shows a schematic flow diagram of interactions between the user **62**, the voice recognition engine **46** on the thermostat **22**, and the voice recognition engine **46** in the cloud **56** during a second attempt **82** of stating a command. If the command **68** from the user **62** is not recognized by the voice recognition engine **46** in the cloud **56** during the first attempt, the remote voice recognition engine **46** may send a message to the thermostat **22** to audibly play and/or visually display a message **69** that may provide additional help or assistance. For example, the thermostat **22** may provide audible (and/or visual) feedback to the user **62** on how to state a command (e.g., "You can say . . . Warmer, Cooler").

[0120] FIG. **12** shows a schematic flow diagram of interactions between the user **62**, the voice recognition engine **46** on the thermostat **22**, and the voice recognition engine **46** in the cloud **56** during a third attempt **84** of stating a command. If the command **68** from the user **62** is not recognized by the voice recognition engine **46** in the cloud **56** or remote from the thermostat **22** during the second attempt, the remote voice recognition engine **46** may send a message to the thermostat **22** to audibly play and/or visually display a message **69** that the thermostat is having difficulty understanding the command and that the problem is being recorded for troubleshooting purposes.

[0121] Other levels of help are contemplated in response to the same and/or various issues with which a user may require assistance or help during use of the voice control system. In addition to the thermostat **22** being able to recognize when a user needs assistance or help, and being able to provide the needed help, help or assistance may be available to a user on demand by saying "Help" or by selecting a help icon or button on the thermostat **22**. The help provided by the thermostat may be offered at and/or on the thermostat **22** and/or on a remote device **25**. For example, to help a user, the thermostat **22** may display a series of images showing steps of a process, the thermostat **22** may speak the steps of the process and/or audibly interact with a user to determine a root cause of an issue. The thermostat **22** and/or remote device **25** may play video explaining a process, the thermostat **22**, if connected to the internet, may bring a user to a website showing how to use a feature of the thermostat and/or service, and/or the thermostat **22** may provide help to a user in any other suitable way, as desired.

[0122] When help is initiated or at other times during the use of the voice control system of the thermostat **22**, the server **58** in the cloud **56** may gather data about user help queries while operating the thermostat **22**. Statistical analysis may be performed on the gathered data to identify areas of the voice control system that may be improved or changed to increase the usability of a particular thermostat **22** or the usability of the voice control system in general. In this way, the voice control system may be improved.

[0123] In some instances, the thermostat **22** may interact with a user **62** by asking questions of the user **62**. For example, if the user **62** is to tell the thermostat that the user **62** is going on vacation, the thermostat **22** may reply with "Ok. Would you like to set a vacation mode?". If the user responds with "Yes", the thermostat **22** may respond with "When are you leaving?". If the user response with "This Friday", the thermostat may respond with "When will you return?". If the

user responds with "Next Tuesday", the thermostat **22** may respond with "What temperature would you like to set while you are on vacation?". If the user responds with a temperature such as "68", the thermostat may program a vacation mode of the thermostat using the information provided by the user. This is just one example. More generally, the voice control system of the thermostat **22** may be capable of conversational interactions with the user to set various modes, settings and/or systems of the thermostat, as desired.

[0124] The thermostat **22** may be capable of auto learning a user's comfortability with the voice control system. Illustratively, the thermostat **22** may automatically learn or identify a user's **62** interaction and experience level with the voice control system (and/or the thermostat **22**) through the user's voice control systems interactions with the thermostat **22**. Various factors may be utilized to determine a user's experience level including, but not limited to, an amount of successful commands provided by a user in a row, an amount of interactions with the voice control system by the user, a number of days in a row in which the user interacts with the voice control system, etc. In one example, at various points of a user's **62** experience journey, the thermostat **22** may recommend or suggest to the user **62** to move to a more advanced voice control mode (e.g., an expert mode) of operating the thermostat **22**. The user may then acknowledge the recommendation or suggestion and opt to move up a level, move down a level, or stay at the same level. Generally, the thermostat **22** may automatically adjust the experience level at which it interacts with the user **62** or it may provide the recommendation to move up or down an experience level based on a sensed experience level of the user **62**. In some instances, an auto-learning thermostat **22** may simplify voice interaction and voice control by limiting the amount of voice control options provided to a user **62** when the user **62** is at a low experience level and by increasing the amount of voice control options provided to the user **62** when the user **62** is at a high experience level. Alternatively or in addition, the voice control system of the thermostat **22** may provide more assistance or help to a user at a low experience level and less help or assistance to a user a high experience level.

[0125] The thermostat **22** may allow for the setting up of and use of user profiles of authorized users of the thermostat **22**. Users **62** may be able to setup their own comfort profile on the thermostat **22** via the voice control system and the thermostat **22** may be able to auto learn each user's **62** voice control system comforatbility level and store that voice control system comfortability level in their user profile. In some examples, a user's profile may include one or more of a user's **62** preferred program mode, voice control system comfortability level, preferred temperature settings, preferred vacation settings, preferred home and away settings, calendar, etc. Each profile may have the ability to be password protected such that the voice control system may be capable of recognizing their password. In similar or other instances, the thermostat **22** may recognize a user's voice and/or may have one or more other sensors (e.g., finger print sensor, eye/retina scanner, facial recognition scanner, etc) to recognize a user and set the thermostat **22** to the identified user's profile.

[0126] In some cases, the thermostat **22** and/or cloud service may train a user on how to use the voice control features. As users may be reluctant to read documentation provided in conjunction with the thermostat **22** on how to use the voice control system, and as it may be difficult to accurately describe how to use the voice control system, the thermostat **22** may provide audio and/or visual tutorials on how to use the voice control system to operate the thermostat **22**. The training and/or help features of the thermostat **22** may be available upon start up of the thermostat **22** and/or upon configuration of the voice control system (e.g., when the voice control system is toggled "on" or turned on in any other manner). Additionally or alternatively, the training and/or help features of the thermostat **22** may be available upon request while utilizing the voice control system by speaking "Help" or some other phrase into the microphone **28** of the thermostat **22**, or by selecting a help or other button from the user interface **26** of the thermostat **22**, as discussed above. In some instances, context sensitive help information may be provided when the system recognizes that the user is having trouble, such as when the thermostat **22** is having trouble recognizing the user's voice commands. The training system of the thermostat may be designed to provide audio and/or visual training/help at the thermostat **22** (and/or remote device **25**), sometimes without referring the user to a website remote from the thermostat **22** and/or without referring the user to a user manual for the thermostat **22**.

[0127] The thermostat **22** may be able to walk a user **62** through a set of audio and/or video queues that teach or explain how to configure the thermostat **22** to control a specific HVAC system. Such a walk through with the voice control system may shorten and/or simplify a thermostat **22** configuration process as opposed to the length of time and difficulty required by following on-screen menus for learning how to configure the thermostat **22** for a specific HVAC system. In one example, a user might initiate the voice control system by stating a trigger phrase (e.g., "Hello, thermostat", etc.) and stating a command ("how to configure thermostat for a humidifier"), in response the voice control system may state "would you like to configure the thermostat to control a humidifier?". If the user responds with "yes", thermostat **22** may correspond with the user **62** in a conversational manner while setting up the thermostat **22** for the HVAC system (e.g., humidifier) based on the user's **62** response to queries from the thermostat **22**. Such a technique may eliminate or reduce the need to walk through menu after menu searching for the settings that are typically needed to configure the thermostat **22** and as a result, may reduce configuration time.

[0128] The voice control system discussed herein, unless otherwise expressly indicated, may be operated from the voice recognition engine **46** on the thermostat **22**, the voice recognition engine **46** on a remote server **58**, both of the voice recognition engine **46** on the thermostat **22** and the voice recognition engine **46** the remote server **58**, or shared between the voice recognition engine **46** on the thermostat **22** and the voice recognition engine **46** on a remote server **58**.

[0129] FIG. **23** is an exploded perspective view of an illustrative thermostat **22** that may include a front cover **210** (e.g., a front window assembly), a display **212** (e.g., a liquid crystal display (LCD)), a spacer **214**, a printed wiring assembly **216**, a back cover **218**, one or more microphones **28**, and one or more speakers **32**. In some instances, when included in the thermostat **22**, the microphones **28** may be affixed to the printed wiring assembly **216** and may face the front cover **210**, and the speakers **32** may be affixed to the back cover **218** and may have electrical contacts **220** that are, or are to be, in electrical communication with electrical contacts **222** on the printed wiring assembly **216**. These arrangements of the

microphones **28** and the speaker **32** are not required and other arrangements of the microphones **28** and speaker **32** may be utilized, as desired.

[0130] An example thermostat **22** structure that may be used and/or combined with the features of this disclosure is disclosed in U.S. Provisional Patent Application Ser. No. 61/800,637, entitled ELECTRONIC DEVICE AND METHODS, filed on Mar. 15, 2013, which is hereby incorporated by reference in its entirety.

[0131] As discussed, the microphones **28** may be positioned on the thermostat **22** at any position, as desired. For example, a first microphone **28***a* may be positioned toward a bottom of the printed wiring assembly **216** and a second microphone **28***b* may be positioned toward the bottom of the printed wiring assembly **216** and spaced from the first microphone **28***a*, as shown in FIGS. **23** and **24**A. In some instances, the microphones **28** may be positioned on the printed wiring assembly **216** and/or in the thermostat **22** in a manner that increases the functionality and/or improves the performance of the thermostat **22** and/or the microphones **28**. For example, the microphones **28***a* and **28***b* may be separated from one another at the bottom of the printed wiring assembly **216** such that they may be utilized to provide noise cancellation functionality at the thermostat **22** or in the cloud **56**, echo cancellation functionality at the thermostat **22** or in the cloud **56**, beam forming or spatial filtering functionality (e.g., the ability to determine from which direction a voice is coming and remove unwanted noise) at the thermostat **22** or in the cloud **56**, increase the area from which sound may be reliably obtained, and/or increase the functionality and/or improve the performance of the thermostat **22** and/or microphones **28** in any other suitable way. Although other positions of the microphones **28** are not shown in the Figures, the microphones **28** may be positioned in other orientations with respect to one another and/or the printed wiring assembly **216**, including, but not limited to, facing different directions, facing each other, being positioned at different heights when the thermostat **22** is upright on a wall, etc.

[0132] As mentioned, the microphones **28** may be positioned on the printed wiring assembly **216** such that they face the front cover **210** when the thermostat **22** is assembled. In some instances, the microphones **28** on the printed wiring assembly may align with pockets **224** of the front cover **210** facing the printed wiring assembly **216**. These pockets **224** may be configured to abut, or alternatively may be positioned adjacent to, the printed wiring assembly **216** to partially enclose or surround one or more microphones **28** in each pocket **224**. In one example, the pockets **224** may enclose and/or surround a majority of the microphone **28** and may have an opening **226** that aligns with an opening **228** of the back cover **218**, where the openings **226**, **228** lead to an external and/or ambient environment. The openings **226**, **228** and the pocket **224** may be configured to receive sound from around the thermostat **22** and funnel that sound to the microphones **28**.

[0133] FIG. **24**A is an exploded front perspective view of the thermostat **22** with the speaker **32** components exploded out of the back cover **218**. In some instances, the speaker **32** may be positioned in a speaker compartment **230** of the back cover **218** such that the electrical contacts **220** (e.g., spring contacts (as shown) or other contacts) of the speaker **32** may align with and contact electrical contacts **222** (shown in FIG. **24**B) on the printed wiring assembly **216** when the thermostat **22** is connected and/or in operation. In some instances, a gasket **244** may be positioned between the speaker **32** and the speaker compartment **230** to ensure a tight fitting between the speaker **32** and the back cover **218**. Illustratively, the speaker **32** may be affixed to the back cover **218** with an adhesive, friction fit, or with any other affixing or connecting mechanism. In some instances, the speaker compartment **230** may form a channel **232** extending from the speaker **32** to an opening **234** in the back cover **218** through which sound from the speaker is heard. The channel **232** may be defined by edges **236** that work to funnel the sound from the speaker **32** to the speaker opening **234** in the back cover **218**.

[0134] FIG. **24**B is an exploded back perspective view of the thermostat **22** with the speaker **32** components exploded out from the back cover **218**. In some cases, the speaker **32** may be positioned about a compartment opening **238** in the back cover **218**, where the compartment opening **238** leads to a speaker cavity **240** enclosed by a speaker cover **242**. The enclosed speaker cavity **240** may be provided for any purpose. For example, the speaker cavity **240** may be provided to improve the sound quality from the speaker **32** that travels through the channel **232** and out the speaker opening **234** in the back cover **218**

[0135] Having thus described several illustrative embodiments of the present disclosure, those of skill in the art will readily appreciate that yet other embodiments may be made and used within the scope of the claims hereto attached. Numerous advantages of the disclosure covered by this document have been set forth in the foregoing description. It will be understood, however, that this disclosure is, in many respect, only illustrative. Changes may be made in details, particularly in matters of shape, size, and arrangement of parts without exceeding the scope of the disclosure. The disclosure's scope is, of course, defined in the language in which the appended claims are expressed.

What is claimed is:

1. A thermostat configured to control one or more HVAC components of an HVAC system, the thermostat comprising:

a housing, the housing configured to house:

a temperature sensor;

a microphone;

a controller;

wherein the controller is configured to identify a trigger phrase included in a voice message received by the microphone of the thermostat, and in response, perform an action.

2. The thermostat of claim **1**, wherein the action performed by the controller in response to identifying the trigger phrase includes transitioning the thermostat from a sleep state to a wake state.

3. The thermostat of claim **2**, further comprising a display, wherein the display is in a lower power state in the sleep state and a higher power state in the wake state.

4. The thermostat of claim **3**, wherein the display includes a backlight, and wherein the backlight is turned off in the sleep state and turned on in the wake state.

5. The thermostat of claim **1**, wherein the action performed by the controller in response to identifying the trigger phrase includes initiating a voice control mode.

6. The thermostat of claim **1**, wherein the action performed by the controller in response to identifying the trigger phrase includes attempting to identify a voice command following the identified trigger phrase.

7. The thermostat of claim 1, wherein the action performed by the controller in response to identifying the trigger phrase includes displaying a home screen on a display of the thermostat.

8. The thermostat of claim 1, further comprising a speaker, wherein the speaker emits an audible message in response to the controller identifying the trigger phrase.

9. The thermostat of claim 1, further comprising a communications port operatively coupled to a web service through the Internet.

10. The thermostat of claim 1, wherein the action performed by the controller in response to identifying the trigger phrase comprises checking for a connection to the Internet.

11. The thermostat of claim 1, wherein the thermostat has a lower power state and a higher power state, wherein the controller is configured to listen for the trigger phrase in both the lower power state and the higher power state.

12. A method of controlling a thermostat, the method comprising:

receiving a voice stream at a thermostat;

identifying a trigger phrase included in the voice stream;

initiating a voice control mode in response to identifying the trigger phrase; and

providing an indication to a user that the voice control mode has been initiated.

13. The method of claim 12, wherein the indication that the voice control mode has been initiated comprises an audible indication.

14. The method of claim 12, further comprising illuminating a display of the thermostat in response to identifying the trigger phrase in the voice stream.

15. The method of claim 14, wherein the illumination of the display is the indicating that the voice control mode has been initiated.

16. The method of claim 12, further comprising:

identifying a voice command following the trigger phrase in the voice stream; and

translating the identified voice command into a command understandable by a controller of the thermostat.

17. A method of controlling a thermostat, the method comprising:

receiving a voice stream at the thermostat;

identifying a voice command in the voice stream, wherein the voice command specifies a parameter value without units;

translating the identified voice command into a thermostat command that includes the parameter value and units that is understandable by the thermostat; and

executing the thermostat command by the thermostat.

18. The method of claim 17, wherein the translating step is performed by thermostat.

19. The method of claim 17, wherein the translating step is performed by a remote web service, and the thermostat command is returned to the thermostat for execution.

20. The method of claim 17, wherein the units are preprogrammed, and the preprogrammed units are applied to the parameter value specified in the voice command.

21. The method of claim 20, wherein different preprogrammed units are applied to the parameter values of different voice commands.

* * * * *