Feb. 11, 1964 J. A. MENZIES ETAL 3,121,154

ELECTRIC HEATERS

Filed Oct. 30, 1959 3 Sheets-Sheet 1

FIG. 1.

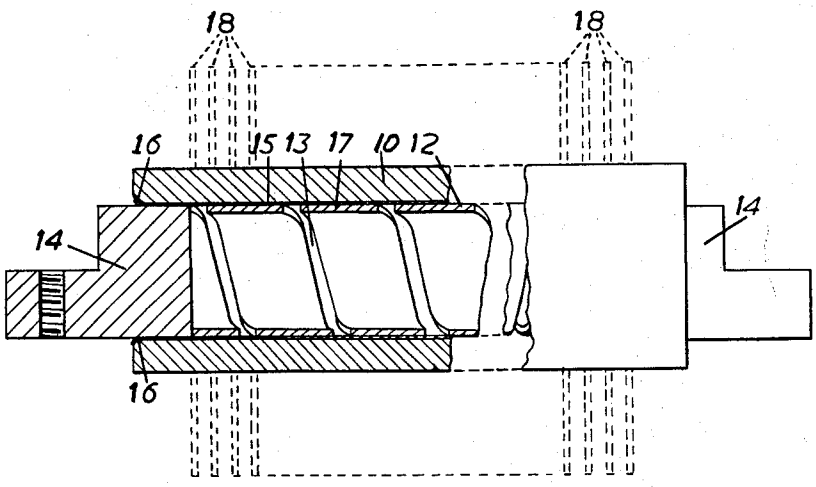

FIG. 2.

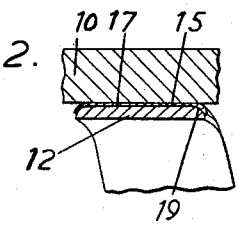

FIG. 3.

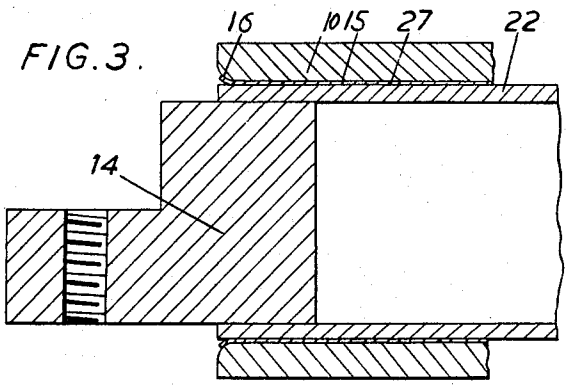

INVENTORS
James A. Menzies
George D. Robertson

BY

ATTORNEY

Feb. 11, 1964 J. A. MENZIES ETAL 3,121,154

ELECTRIC HEATERS

Filed Oct. 30, 1959 3 Sheets-Sheet 2

FIG. 4.

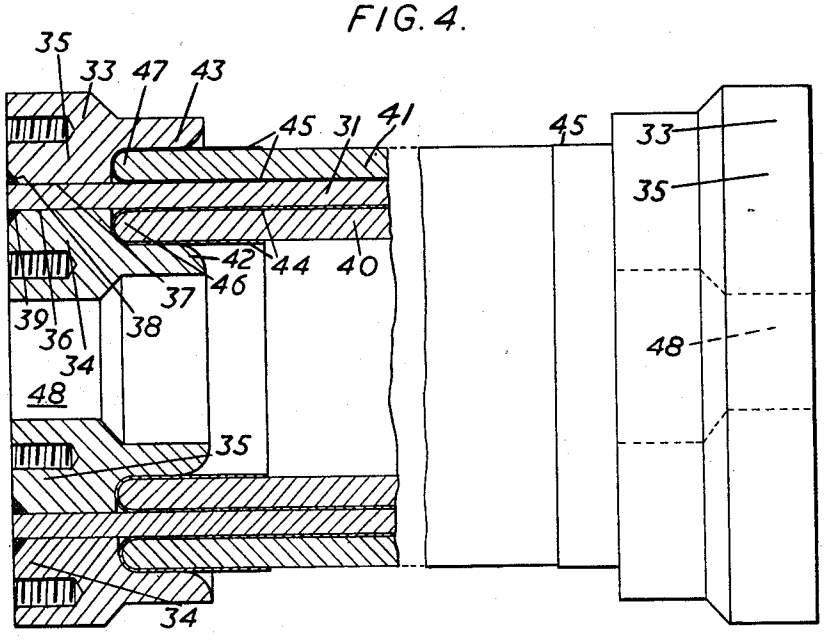

INVENTORS
James A. Menzies
George D. Robertson

BY

ATTORNEY

Feb. 11, 1964 J. A. MENZIES ETAL 3,121,154

ELECTRIC HEATERS

Filed Oct. 30, 1959 3 Sheets-Sheet 3

FIG. 5.

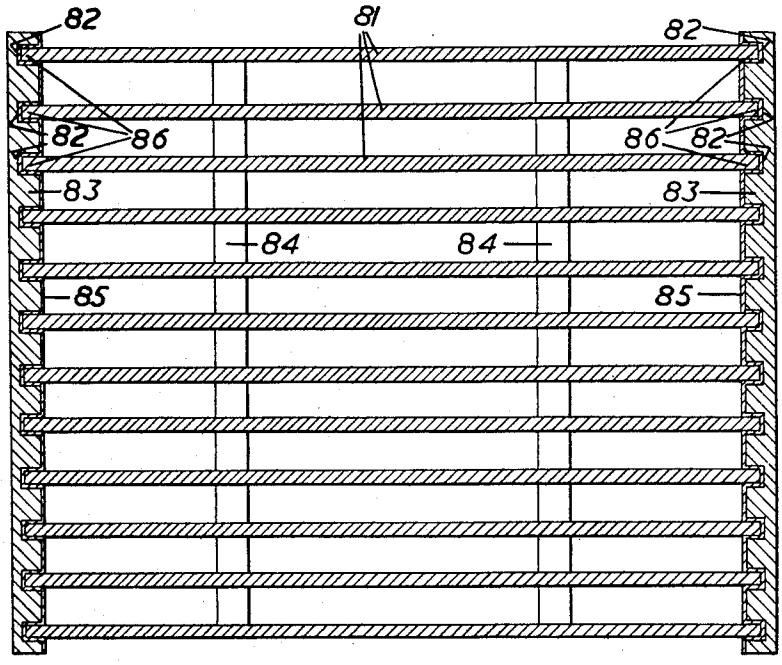

INVENTORS
James A. Menzies
George D. Robertson

BY

ATTORNEY

United States Patent Office 3,121,154 Patented Feb. 11, 1964

3,121,154

ELECTRIC HEATERS

James A. Menzies, London, England, and George D. Robertson, Glasgow, Scotland, assignors to Babcock & Wilcox, Limited, London, England, a corporation of Great Britain

Filed Oct. 30, 1959, Ser. No. 849,775
3 Claims. (Cl. 219—19)

This invention relates to electric heaters. In a highly rated electric heater of the kind including an electric resistance and a covering means, for example, an enclosing sheath, difficulty is experienced in insulating the resistance from the sheath in a manner adapted to withstand the relatively high temperature and to permit high heat transfer rates to the covering means when the latter is required to operate at temperature of the order of 900° F. The present invention enables highly rated electric heaters to be provided which have satisfactory insulation enabling particularly high rates of heat transfer from the resistance to the covering means to be achieved.

The present invention includes an electric heater having an electric resistance and a covering means for the electric resistance wherein the resistance is insulated from the covering means by a thin, dense and coherent layer of oxidized aluminum.

In a form of rod heater in accordance with the invention, the resistance is of helical form, its radially outer surface being in contact with an interior anodized aluminum film on a surrounding tube which may be of aluminum alloy. Suitably the helix is in the form of a ribbon with the faces of the ribbon facing radially inwards and radially outwards. The ribbon may be of uniform area and shape, referred to cross-sections transverse to the ribbon, or, if it is desired that the heat output therefrom shall vary from point to point along its length, the cross-sectional area may appropriately vary from point to point along its length, by variation, for example, of the radial dimension only of the ribbon along its length, the radial dimension being reduced in regions in which it is desired that the heat output per unit length of the heater shall be relatively greater.

The various features of novelty which characterize our invention are pointed out with particularity in the claims annexed to and forming a part of this specification. For a better understanding of the invention, its operating advantages and specific objects attained by its use, reference should be had to the accompanying drawings and descriptive matter in which we have illustrated and described preferred embodiments of the invention.

Of the drawings:

FIGURE 1 is an elevation partly in section on its axis of one form of the invention;

FIGURES 2 and 3 are sectional elevations of parts of modified forms of the heater shown in FIGURE 1;

FIGURE 4 is an elevation of a tubular heater, partly in a section on its axis; and

FIGURE 5 is a section through a heater unit comprising an assembly of heater plates.

Referring to FIGURE 1 of the drawings, a heater for simulating a fuel element for a gas-cooled, natural uranium nuclear reactor core comprises a covering means such as aluminum alloy tube **10**, of the same length and outside diameter as the length and outside diameter of the can of the fuel element and housing a helical electric resistance heating element **12**.

The helical heating element is formed by machining a helical gap **13** along the length of a tube of suitable metal, for example, the iron-chromium-aluminum-cobalt alloy known as Kanthal A, or a stainless steel of a kind used for resistance heaters, to form a helical ribbon with

the faces of the ribbon facing radially inwards and radially outwards. At its ends the ribbon is brazed or silver soldered to respective brass cylindrical blocks **14** which close the respective ends of the surrounding tube and also act as terminals through which the ribbon may be connected into an appropriate electric circuit.

The interior surface of the covering tube **10** is covered by a continuous, dense and coherent film **15**, having a uniform thickness of the order of 0.002 inch, formed electrolytically by the treatment development for producing a particularly wear-resistance surface on the alloy containing a sufficiently large proportion of aluminum and known as hard anodizing. The edges **16** bounding the said interior surface are rounded-off and the anodized film extends a certain distance onto the rounded edges **16**, whereby the tube surface uncovered by the film is spaced from the blocks **14** by a considerably greater distance than the thickness of the film.

The outside diameter of the tube from which the ribbon **12** is formed is slightly greater than the internal diameter of the covering tube **10** with its anodized film **15**, e.g. the said outside diameter may be at least that of the internal diameter of the covering tube before the anodized film is formed; for this reason the helical ribbon, in place in the covering tube, is under strain and the radially outer face **17** of the ribbon is forced into intimate contact with the anodized film **15**. When inserting the ribbon into the covering tube, one cylindrical block **14** is temporarily turned with respect to the other so that the ribbon assumes a reduced diameter, whereby the longitudinal movements of the coils of the ribbon inside the covering tube easily move to take up positions in which the coils are evenly spaced. The diameter of the cylindrical blocks is substantially the same as the internal diameter of the covering tube before the anodized film is formed.

In the operation of the heater, heat generated by resistive heating of the coils of the ribbon **12** passes outwardly from the coils through the anodized film **15** and the wall of the covering tube **10** to whatever body is provided for accepting the heat. The reference numeral **18** denotes some of a number of fins, which could be integral with the covering tube, which might be provided to assist in the transfer of heat to a cooling gas flowing longitudinally of the covering tube, and of which the heat transfer effectiveness to said gas might be under investigation. The anodized film is thin enough to permit the ready flow of heat outwardly therethrough between the surfaces intimately contacting it on its inner and outer faces respectively, whereby the heating ribbon runs at minimum temperature, but is thick enough to act as electrical insulation; the anodized film retains its electrically insulating properties in spite of high temperatures.

In a rod heater of the nature described, having a covering tube of $1\frac{5}{16}$ inches external diameter, it has been found possible satisfactorily to effect heat transfer at the rate of 15 kilowatts per foot length of heater with the covering tube at a temperature of about 900° F.

An oxidized aluminum film adapted for the ready passage therethrough of heat in large quantities while acting as electrical insulation may be deposited on metal surfaces by a suitable known spraying process. Thus, instead of an anodized film **15** on the interior surface of the covering tube **10** in the rod heater described with reference to FIGURE 1, an oxidized aluminum film may be used which has been deposited by spraying on the radially outer face **17** of the helical ribbon **12**, and also on the cylindrical surface of the cylindrical blocks **14**, insulating the blocks from the covering tube. In this modification it is appropriate to round-off, in the manner illustrated in FIGURE 2, the edges **19** of the helical ribbon **12** bounding the radially outer face **17** of the ribbon, and

to ensure that the spray-deposited film 15 extends a certain distance onto the rounded edges 19, whereby to provide greater spacing between the surrounding tube and uncovered surface of the ribbon. In this modification, the covering tube 10 need not be metal that includes aluminum in a proportion which renders it suitable for the formation of an anodized film thereon, but it may be, for example, of stainless steel.

In another modification, to which FIGURE 3 refers, of the rod heater described with reference to FIGURE 1, the electric resistance heating element is in the form of a tube 22 of which the radially outer surface 27 is in contact with a hard anodized film 15 which has been formed on the interior surface of the covering tube 10. The tubular heating element 22 and the covering tube 10 are of the same length; the terminals are constituted by cylindrical blocks 14 closing the respective ends of the tubular heating element, which blocks may be tack-brazed or tack-silver soldered to the tubular heating element after having been driven or screwed into position. The edges 16 bounding the interior surface of the tube 10 are rounded and the anodized film 15 extends a certain distance onto the rounded edges 16. If the tubular heating element 22 makes a push fit in the surrounding tube 10 before the anodized film 15 has been formed on the interior surface of the latter, the tubular heating element may, after the hard anodized film of the order of 0.002 inch thick has been formed be driven into position within the surrounding tube 10 without damagaing the desired properties of the film and intimate contact results between the radially outer surface 27 of the tubular heating element 22 and the inner surface of the film 15. Alternatively, if desired, the tubular resistance element 22 may be expanded into intimate contact with the film 15, the expansion being made by hydraulic or mechanical means or taking place by warming up after it has been inserted into the covering tube in chilled condition, or the outer tube may be shrunk about the resistance element by any of the means well known in the art.

FIGURE 4 shows a tubular heating element 31 of Kanthal A or stainless steel mounted in a tubular heater adapted for heating fluid flowing thorugh a central passage 32 of the heater as well as fluid flowing over the outside of the heater. The tubular heating element is held at its ends in respective similar terminal block assemblies 33 each consisting of an annular inner brass block 34 and an annular outer brass block 35. Each end length of the heating element fits over a cylindrical outer surface 36 of the appropriate inner block 34 and within a cylindrical inner surface 37 of the appropriate outer block 35, and the extremity thereof is brazed or silver-soldered as at 39 to the inner end as at 38 to the outer brass block.

Intermediate its end lengths the heating element 31 is supported by a closely-fitting inner covering tube 40 and a closely-fitting outer covering tube 41 both of aluminum or aluminum alloy, which are also held by the terminal block assemblies, the former tube 40 fitting at each end between the heating element and an annular collar 42 on the appropriate inner brass block 34, and the latter tube 41 fitting at each end between the heating element and an annular collar 43 on the appropriate outer brass block 33.

The inner and outer covering tubes 40 and 41 are electrically insulated from the heating element, and also from the terminal block assemblies 33, by electrolytically or spray deposited aluminum oxide layers or film 44 and 45 on the inner and outer covering tubes 40 and 41 respectively or on the heating element. Thus the film 44 extends over the whole length of the outer surface, facing the inner surface of the heating element, over the ends 46, suitably rounded, and over end lengths, longer than the collars 42, of the inner surface of the inner covering tube 40. The film 45 also extends over the whole length of the inner surface, facing the heating element, over the ends 47, suitably rounded, and over end lengths, longer than the collars 43, of the outer surface of the outer covering tube 41.

Each inner block 34 provides an aperture 48 leading to the passage 32 within the tubular heating element. The terminal block assemblies 33 serve for leading electric current to and from the heating element, heat from which passes through the aluminum oxide films 44 and 45 and through the inner and outer covering tubes 40 and 41 to the fluid to be heated.

FIGURE 5 is a cross-section of a modified heater unit comprising a plurality of flat heating element plates 81 of aluminum, aluminum alloy or zirconium assembled into a group, parallel to one another, with uniform gaps between their adjacent faces, to form a heater unit adapted for heating gaseous fluid. The plates have opposite sides entered into slots 82 equidistantly spaced on opposed faces on respective support plates 83 of aluminum or aluminum alloy forming part of or secured to some suitable supporting structure for the heating unit as a whole. On said opposite faces of the support plates including the surfaces of the slots, a dense, coherent film of alumina of at least 0.002 inches thick has been formed by a hard anodizing process. Alternatively or in addition, when the resistance elements are of aluminum or aluminum alloy the end portions 86 of the resistance elements which enter the slots may be formed with hard anodized films. Electric current may be led to and from the plate type heaters through one or more terminal strips such as 84 at one end of the heater unit each welded at that end to the edges of all the heating element plates, and a similar terminal strip or strips at the other end of the heater unit.

While in accordance with the provisions of the statutes we have illustrated and described herein the best forms and modes of operation of the invention now known to us, those skilled in the art will understand that changes may be made in the forms of the apparatus disclosed without departing from the spirit of the invention covered by our claims, and that certain features of our invention may sometime be used to advantage without a corresponding use of other features.

We claim:

1. An electric heater having a plurality of electric resistance plates, said resistance plates positioned in parallel relationship to one another, a pair of supporting plates oppositely arranged transversely of said resistance plates and on opposite sides thereof and having a plurality of parallel slots on the opposed faces thereof, said resistance plates adapted to fit in said slots in said supporting plates to be supported therebetween, and a thin dense and coherent film of oxidized aluminum disposed within said slots to insulate said resistance plates from said supporting plates.

2. An electric heater comprising an electrical resistance of tubular shape, a covering tube surrounding said tubular resistance, a second covering tube interior of said tubular resistance, a thin dense and coherent film of oxidized aluminum in direct contact with and between said resistance and said first and second covering tube, and at least one terminal block assembly adapted to support at least one end of said tubular resistance and said covering tubes, said film of oxidized aluminum further disposed between said covering tubes and said terminal block assembly.

3. An electric heater comprising an electrical resistance of tubular shape, a covering tube enclosing said resistance, a thin dense and coherent film of oxidized aluminum in direct contact with and between said resistance and said covering tube, and at least one terminal block assembly adapted to support at least one end of said tubular resistance and said covering tube, said film

of oxidized aluminum further disposed between said covering tube and said terminal block assembly.

References Cited in the file of this patent

UNITED STATES PATENTS

483,759	Appleyard	Oct. 4, 1892
1,736,745	Lohmann	Nov. 19, 1929
1,870,619	Flanzer	Aug. 9, 1932
2,088,949	Fekete	Aug. 3, 1937
2,110,660	Doczekal	Mar. 8, 1938
2,135,775	Walker	Nov. 8, 1938
2,333,476	Duston	Nov. 2, 1943
2,357,906	Osterheld	Sept. 12, 1944
2,360,264	Osterheld	Oct. 10, 1944
2,457,598	Osterheld	Dec. 28, 1948
2,499,961	Lennox	Mar. 7, 1950
2,543,970	Horsfall et al.	Mar. 6, 1951
2,735,162	Huck	Feb. 21, 1956
2,745,932	Glaser	May 15, 1956
2,822,457	Hatch	Feb. 4, 1958
2,875,312	Norton	Feb. 24, 1959
2,916,594	Sawyer	Dec. 8, 1959
2,959,663	Fenn	Nov. 8, 1960
2,995,646	Kawalle	Aug. 8, 1961