(19) Europäisches Patentamt
European Patent Office
Office européen des brevets

(11) Publication number: **0 491 437 A2**

(12) # EUROPEAN PATENT APPLICATION

(21) Application number: **91203277.8**

(51) Int. Cl.5: **F24C 15/16**

(22) Date of filing: **12.12.91**

(30) Priority: **19.12.90 IT 2243290**

(43) Date of publication of application:
24.06.92 Bulletin 92/26

(84) Designated Contracting States:
DE FR GB

(71) Applicant: **WHIRLPOOL INTERNATIONAL B.V.**
Luchthavenweg 34
NL-5507 SK Veldhoven(NL)

(72) Inventor: **Cigarini, Enzo**
c/o INT. OCTROOIBUREAU B.V. Prof.
Holstlaan 6
NL-5656 AA Eindhoven(NL)

(74) Representative: **Melio, Jan Dirk**
Whirlpool Italia S.r.l., Viale Guido Borghi 27
I-2105 Comerio (Varese)(IT)

(54) **Grill plate removably insertable into a domestic oven and provided with a removable filter element.**

(57) A grill plate (1) removably insertable into a domestic oven (10) comprises on its upper face (2) an at least partly undulated resting surface (3) and on its lower face (6) an electrical resistance element (7); the plate (7) also comprises electrical connection members (8) for powering the resistance element (7). The plate (1) comprises support means (16) for at least one filter element (20) able to absorb the vapour generated by the food situated on the plate (1) during its use, said filter element (20) being advantageously removable.

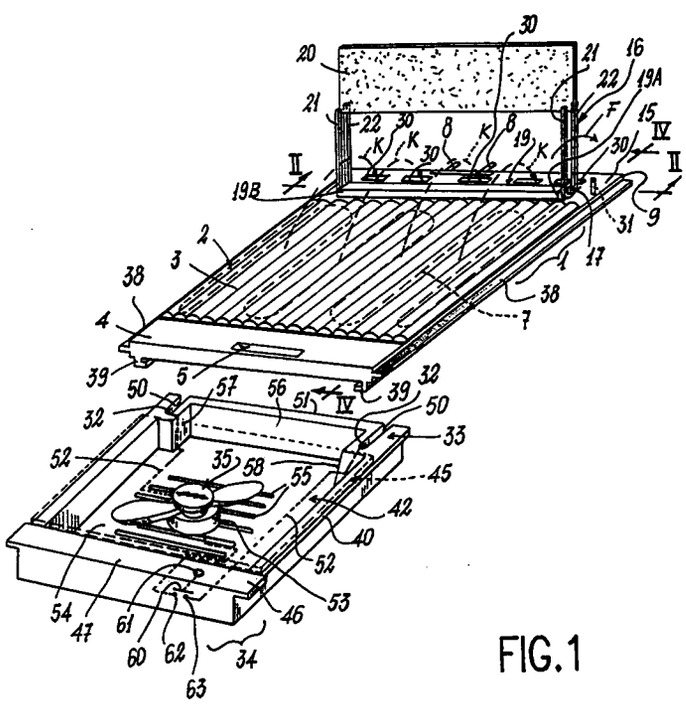

FIG.1

EP 0 491 437 A2

This invention relates to a grill plate removably insertable into a domestic oven, comprising on its upper face an at least partly undulated resting surface and on its lower face an electrical resistance element, electrical connection members being provided for powering said resistance element.

Plates of the aforesaid type provided with independent heating members (electrical resistance elements) for use as grills in ovens have been known for some time.

However, these known plates are particularly suitable for use in forced circulation ovens in which the vapour generated by the food on the plate is withdrawn from the cooking chamber by the fan with which the oven is provided, and then filtered and expelled into the external environment.

The vapour released from said food is however generally very greasy and deposits on those parts of the oven between the cooking chamber and the fan, on parts of this latter and sometimes on the electrical and mechanical members which drive it.

In the long term this can make it impossible to properly use the fan with which the oven is provided.

Again as stated, the known plates are particularly suitable for use in forced circulation ovens because the greasy vapour generated during food preparation can then be removed from their cooking chambers. For the opposite reason (impossibility of removing greasy vapour from the cooking chambers), the use of such plates is inadvisable in static ovens.

In this respect, the vapour deposits on the cooking chamber walls, the user then being compelled to clean them carefully, with considerable time loss, each time the grill plate is used. Finally, said plates cannot be used as "table" or garden grills. An object of the present invention is to provide a grill plate particularly for a domestic oven, which enables the vapour released from the food during its treatment to be filtered.

A particular object of the invention is to provide a plate which enables said filtering to be effected before the vapour is drawn through the usual fan of a forced circulation oven in which the plate is inserted.

A further object is to provide a food grill plate which can also be used in ovens of static type without any excessive deposition of greasy vapour on the walls of the cooking chamber of said oven. A further object is to provide a food grill plate of the said type which can also be used as a table or garden grill (ie without inserting it into a domestic oven), without excessive release of greasy vapour and bad odour into the environment.

These and further objects which will be apparent to the expert of the art are attained by a plate of the aforesaid type, characterised by comprising support means for at least one filter element able to absorb the vapour generated by the food situated on the plate during its use, said filter element being advantageously removable.

According to a further characteristic of the invention, the plate comprises in its upper face at least one slot opening into the lower face of the plate, on which fixing means are provided for a housing which in a seat therein houses suction means for withdrawing the vapour generated on the upper face of the plate during the preparation of the food situated thereon, said slot, to allow said suction to act, opening into said seat when the plate and said housing are fitted together, electrical connection means being provided on the lower face of said plate to cooperate with corresponding counter-means associated with said housing for electrically powering the suction means.

The present invention invention will be more apparent from the accompanying drawing, which is provided by way of non-limiting example and in which:

Figure 1 is an exploded view of one embodiment of a plate according to the invention;

Figure 2 is a section on the line II-II of Figure 1;

Figure 3 is a schematic representation of a plate according to the invention during its insertion into an oven;

Figure 4 is a section on the line IV-IV of Figure 1; and

Figure 5 is a schematic representation of the plate of Figure 1 during its insertion into a support for table use.

With reference to said figures the plate according to the invention is indicated overall by 1 and comprises an upper face 2 with an undulated part 3 and a flat part 4 in which an elongate hole 5 is provided to allow the plate to be handled. This hole and the adjacent portion of the plate 1 act as a handle for said handling.

The plate 1 also has a lower face 6 provided with an electrical resistance element 7 connected in known manner to pins 8 provided on one side or edge 9 of the plate.

On inserting the plate 1 into a for example forced circulation oven 10 (see Figure 3), said edge 9 reaches the end wall 11 of the cooking chamber 12, where usual known electrical connection elements (not shown) are provided to cooperate with the pins 8. The oven also comprises a usual fan 13 and raised portions 14 to act as support rails for the insertion of known supports for the plate 1 into the chamber 12.

According to the invention the plate comprises on that part 15 close to the edge 9 a frame 16 movably supported by pivots 17 fixed to a projection 19 provided on said part 15. Said frame 16 can rotate about said pivots (acting as a hinge) and

supports a filter element 20 which in the example shown in Figure 3 assumes a position in front of the fan 13.

Specifically, the frame 16 comprises opposing arms 21 and 22 disposed at the two ends 19A, 19B of the projection 19. These arms define slide tracks 25 for fitting the filter element or filter 20 to the frame 16 and act as a support for this filter. As stated, the frame 16 can rotate (arrow F, Figure 1) about the pivots 17 to assume the position (or first position) shown in Figures 1, 3 and 4 (perpendicular to the face 2) and remain in this position by virtue of known stops (not shown) associated with the projection 19. The frame can also assume a second position in which it is folded onto said face 2.

In this position, the filter 20 lies on slots 30 provided through said part 15, said slots opening into the lower face 6 of the plate 1.

From this face there project two connectors 31 connected in any known manner to the pins 8 to cooperate with corresponding connectors 32 provided in a part 33 of a housing 34 with which at least one fan 35 is associated to withdraw from the face 6 of the plate 1 via the slots 30 the vapour which is released by the food during its preparation. This enables the plate 1 to be also used in an unventilated (ie static) oven.

For this purpose the housing is arranged for fixing to the plate 1. This latter comprises at its side edges 38 guides 39 to slidingly cooperate with projections 40 on the housing 34, to thus support this latter in known manner.

The housing 34 comprises a cavity 42 which contains the fan 35 and which when the plate 1 and said housing are fitted together lies below the face 6 of said plate.

To avoid damaging the fan 35 during the operation of the resistance element 7, the cavity 42 is partly covered with a flat thermally insulating member 45 which assumes a position below said resistance element. The flat member rests with one end 46 against a projection 47 provided on the housing 34, this projection also acting as a stop element for the sliding between the plate 1 and said housing on fitting them together.

As stated, the part 33 comprises connectors 32 which cooperate with the connectors 31 on the plate 1.

Advantageously, each of said connectors 32 is provided at the end of a recess 50 opening at one end 51 of the housing 34 to enable the plate 1 and said housing to be fitted together by mutual sliding, as stated.

Electrical connections 52 extend from the connectors 32 to a usual electric motor 53 for the fan 35. This motor is positioned on the base of the cavity 42, where apertures 55 are provided to discharge the air drawn through the slots 30 in the plate 1. For this purpose, the slots open into a portion 56 of the cavity 42 defined by lateral shoulders 57 and 58, said portion 56 not being covered by the insulating member 45 when the housing 34 is fitted to the plate 1.

Of the electrical connections feeding the motor 53, one of these comprises a contactor 60 operated by a pushbutton 61 located on the projection 47, to connect two contacts 62 and 63 together. This pushbutton is easily accessible by the user, even when the plate 1 connected to the housing 34 is inserted into an oven. As is apparent, the motor 53 is powered by connecting the pins 8 to an electrical power source. In the case of a forced-circulation oven 10, as stated it is already known to provide usual connection elements (not shown) on the rear wall 11 of its cooking chamber 12.

However in the case of a static oven, these connectors are not provided, and the pins 8 are therefore powered via a socket 70 associated with an electric cable 71 connected to the normal mains electricity external to the oven.

To facilitate connection to the pins 8 while maintaining the edge 9 of the plate 1 facing the end wall of the cooking chamber of a static oven, the pins 8 are associated with a portion 72 of the plate 1 rotatable about pivots 73 (arrows G and H) containing rigid electrically conducting elements 74 to which the electrical connections from the pins 8 are connected in known manner (or alternatively to which the pins are directly connected).

The conducting elements 74 slidingly cooperate with contacts 75 present in the part 15 of the plate 1 and which are connected in any known manner to the connectors 31 and to the resistance element 7.

It will now be assumed that the plate 1 is to be used in a forced-circulation oven.

With reference to Figure 3, the plate is inserted into the cooking chamber of the oven 10 without the housing 34 having been fitted to it.

The insertion of the plate 1 brings the filter 20 into a position corresponding with the fan 13 and results in the pins 8 cooperating with the connection elements provided on the end wall 11 of the chamber 12.

If the fan 13 is now operated and (simultaneously or by a separate control) current is fed to the pins 8, the resistance element 7 begins to heat the plate 1 on which the food to be grilled has been placed.

The greasy vapour released from the food is withdrawn from the plate 1 by the fan 13. During this withdrawal the vapour passes through the filter 20 which retains the grease and any food particles released during the food preparation.

The grease therefore does not come into contact with the fan 13 or with the electrical parts associated with it, so preventing any possible damage to these components, which could impair operation. At the same time the use of the plate 1 in the oven 10 prevents the vapour and bad odours released during food preparation from dispersing freely into the environment.

The use of the plate 1 in a static oven again prevents dispersal of the vapour and odours into the environment, but requires the plate to be fitted to the housing 34 which houses the fan 35 (because otherwise no suction action is exercised on the vapour within such an oven).

This is done by fitting the plate and the housing 34 together by mutual sliding, after placing the insulating panel 45 between the plate and said housing.

Having done this the portion 72 is rotated about the pivot 73, to bring it into a position perpendicular to that shown in the figures, and the pins 8 are connected to the socket 70. The unit comprising the plate 1 and housing 34 is then inserted into the usual oven cooking chamber. This insertion is advantageously continued until the edge 9 is brought into contact with the end wall of said chamber, so that the slots 30 lie within the oven. If the socket 70 is now powered in known manner and the pushbutton 61 operated to close the contactor 60 across the contacts 62 and 63, both the resistance element and the fan operate.

In this manner the vapour released from the food during its preparation is withdrawn by said fan (arrows K in Figure 1) through the filter 20 and the slots 30 (this filter having advantageously been positioned above said slots by rotating the frame 16 in accordance with the arrow F of Figure 1), to penetrate into the portion 56 of the cavity 42 and be expelled from the housing 34 through the apertures 55.

In this manner the air expelled through said apertures is directed into the oven chamber and passes via the oven door (which is usually kept open when grilling food) to the outside environment, without conveying with it the greasy vapour or any food particles. Figure 5 shows a further use of the plate according to the invention. In this figure (in which parts corresponding to those of the previous figures are indicated by the same reference numerals), the plate 1 is fitted to the housing 34 in the described manner and then inserted into a support 100 which enables it to be used on a table or any other non-enclosed surface (ie not in an oven).

The support comprises on its inner wall 100A the connection elements 101 for the pins 8 (not shown) carried by the plate 1, said elements 101 being connected in known manner to a connection cable 103 for mains powering. In addition the support is provided with lateral half-walls 104 to improve the vapour withdrawal by the fan housed in the housing 34. The vapour is then expelled from this latter in the described manner and leave the support 100A via a grid 105 provided in the surface 106 on which the plate 1 and housing 34 rest.

The use of these latter is analogous to their already described use when inserted into a static oven. Power is fed to the pins 8 of the plate by suitably operating a pushbutton 107 positioned on the front 108 of the support 100 and connected in known manner to the cable 103. One embodiment of the invention has been described.

However modifications can be made thereto which fall within the scope of the present document.

Claims

1. A grill plate removably insertable into the cooking chamber of a domestic oven, comprising on its upper face an at least partly undulated resting surface and on its lower face an electrical resistance element, electrical connection members being provided for powering said resistance element, characterised by comprising support means (16) for at least one filter element (20) able to absorb the vapour generated by the food situated on the plate (1) during its use, said filter element (20) being advantageously removable.

2. A plate as claimed in claim 1, characterised in that the support means are a frame (16) provided in a position corresponding with a part (15) of the plate (1) close to its end edge (9), said frame being provided with retention elements (21, 22) to retain the filter element (20).

3. A plate as claimed in claim 2, characterised in that the frame (16) is secured to a projecting part (19) of the plate (1) and can move relative thereto by rotating about pivots (17) which secure it to said projecting part, said frame (16) comprising, for supporting the filter element (20), opposing arms (21, 22) disposed at both ends of said projecting part (19) and defining slide tracks (25) for associating the filter element (20) with the frame.

4. A plate as claimed in claim 1, characterised by comprising in its upper face (2) at least one slot (30) opening into the lower face (6) of the plate (1), on which fixing means (39) are provided for a housing (34) which in a seat (42) therein houses suction means (35) for withdrawing the vapour generated on the upper

face (2) of the plate (1) during the preparation of the food situated thereon, said slot (30), in order to allow said suction to act, opening into said seat (42) when the plate (1) and said housing (34) are fitted together, electrical connection means (31) being provided on the plate (1) to cooperate with corresponding counter-means (32) associated with said housing (34) for electrically powering the suction means (35).

5. A plate as claimed in claims 2 and 4, characterised in that the slot (30) is provided in that part (15) of the plate (1) close to the end edge (9) thereof.

6. A plate as claimed in claim 4, characterised in that the fixing means are guides (39) provided at the lateral edges (38) of the plate (1) to slidingly cooperate with projections (40) on the housing (34) which houses the suction means (35).

7. A plate as claimed in claim 4, characterised in that the suction means are at least one fan (35).

8. A plate as claimed in claims 4 and 7, characterised in that the slot (30) opens into at least one portion (56) of the seat (42) which contains the fan (35) in the housing (34) associable with the plate, there being provided in a bottom part of said seat (42) apertures (55) which open externally to said housing (34).

9. A plate as claimed in claims 4 and 7, characterised in that the seat (42) containing the fan (35) in the housing (34) is a cavity to lie below the lower face (6) of the plate, said seat being partly covered with a thermally insulating panel (45), which does not however cover that portion (56) of said cavity into which the slot (30) provided in the plate (1) opens.

10. A plate as claimed in claim 4, characterised in that the electrical connection means are pins (31) provided on the lower face (6) of the plate (1) to cooperate with corresponding connectors (32) on the housing (34) containing the suction means (35).

11. A plate as claimed in claims 1 and 4, characterised in that the electrical connection means (31) are connected to the usual electrical connection members (8) for powering the resistance element (7) of the plate (1).

12. A plate as claimed in claims 2 and 11, characterised in that the usual electrical connection members (8) are positioned on the end edge (9) of the plate (1) and are associated with a plate portion (72) which is movable relative to said plate.

13. A plate as claimed in claim 12, characterised in that the portion (72) with which the electrical connection members (8) are associated is rotatable about at least one pivot (73) which secures said portion to the remaining part of the plate (1), in said pivot there being provided conductor elements (74) which slidingly cooperate with contacts (75) present in said part and connected to the electrical resistance element (7) and to the electrical connection means cooperating with the counter-means carried by the housing (34) with which the suction means are associated.

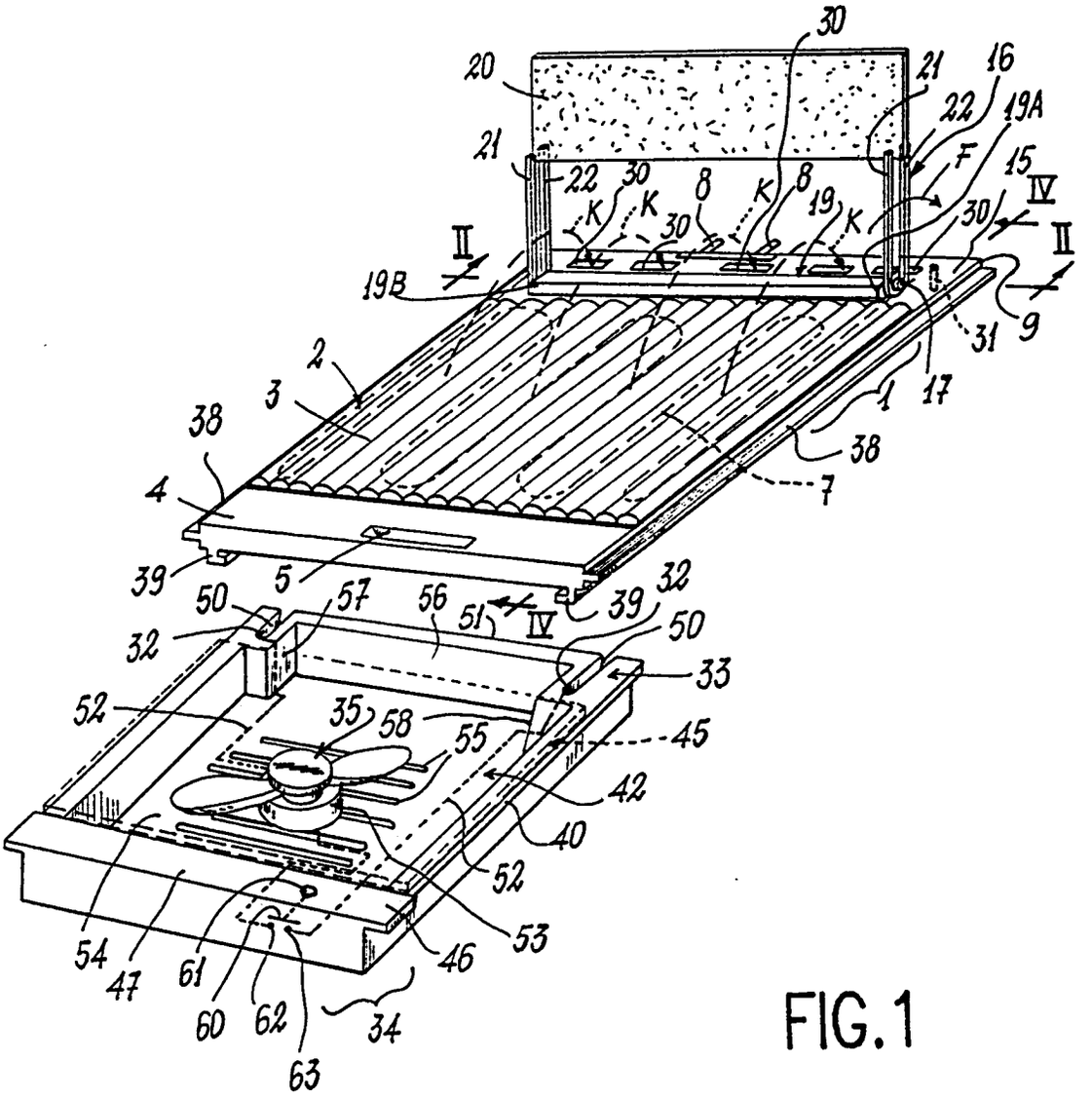
30
20
21
16
22
19A
21
22
30
8
8
F
15
IV
K
K
30
19
K
30
II
II
19B
9
31
2
17
3
1
38
38
4
7
39
5
39
32
50
57
56
51
IV
50
32
33
52
35
58
55
45
42
40
52
53
54
47
61
46
60
62
34
63

FIG.1

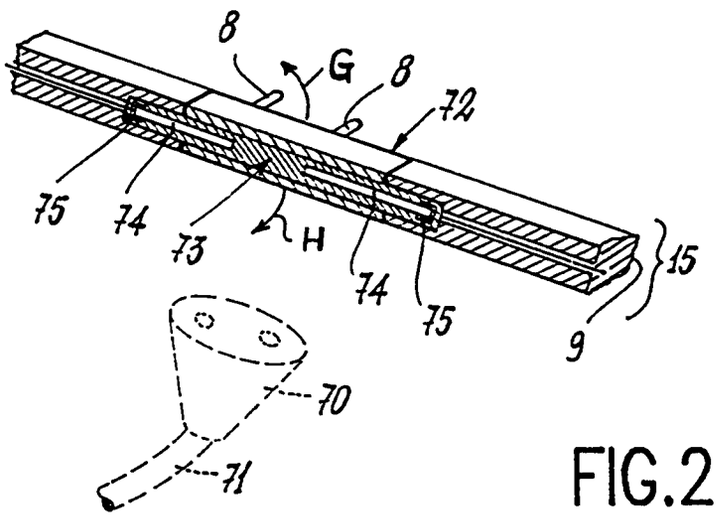
8
G
8
72
75
74
73
H
74
75
15
9
70
71

FIG.2

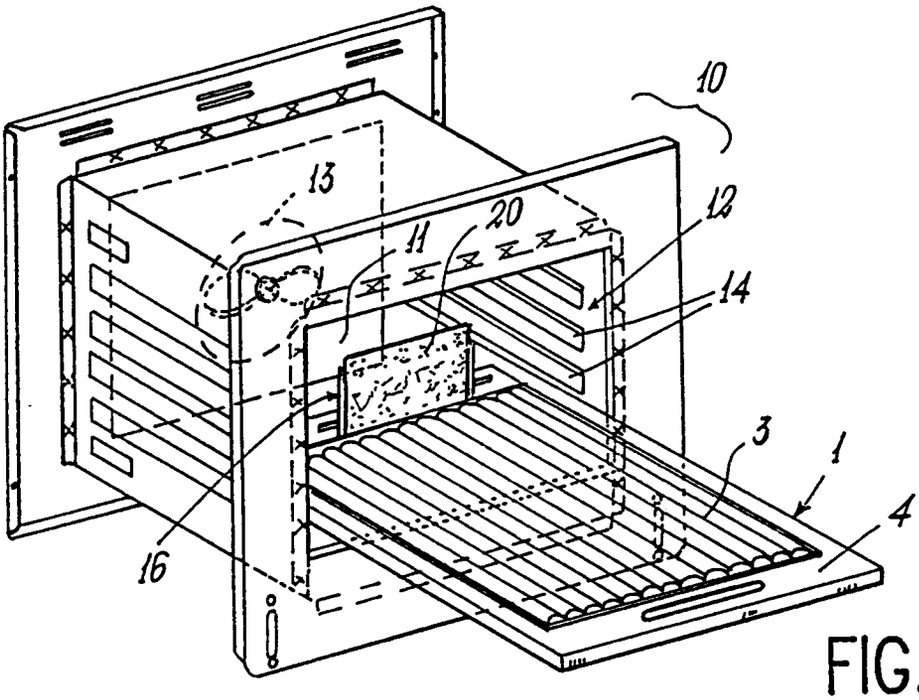

FIG.3

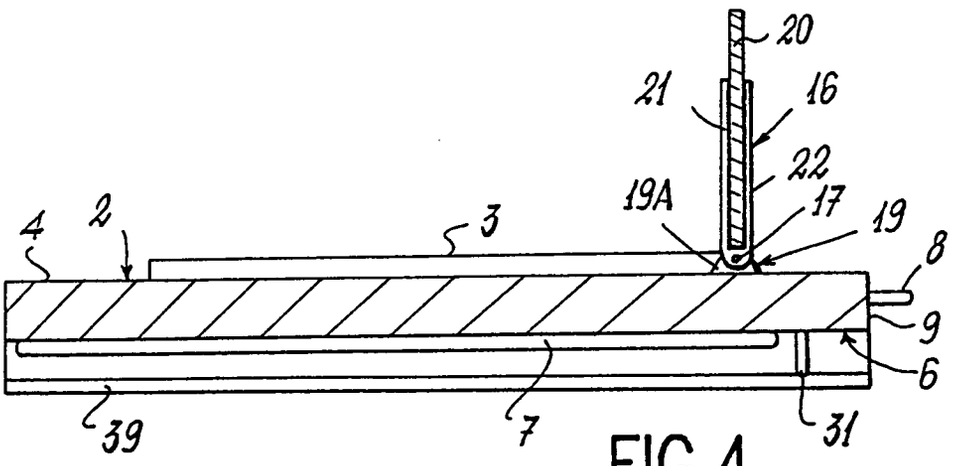

FIG.4

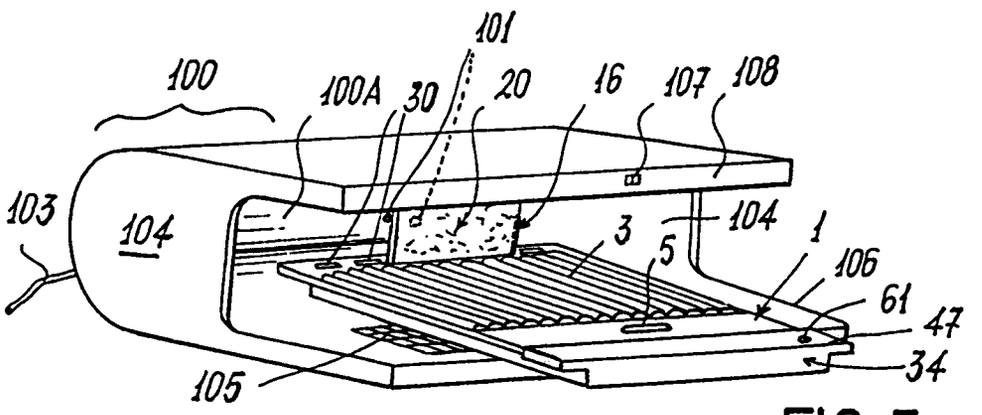

FIG.5