W. D. WARNER.

CARBURETER CONTROL.

APPLICATION FILED JAN. 24, 1920.

1,400,110. Patented Dec. 13, 1921.

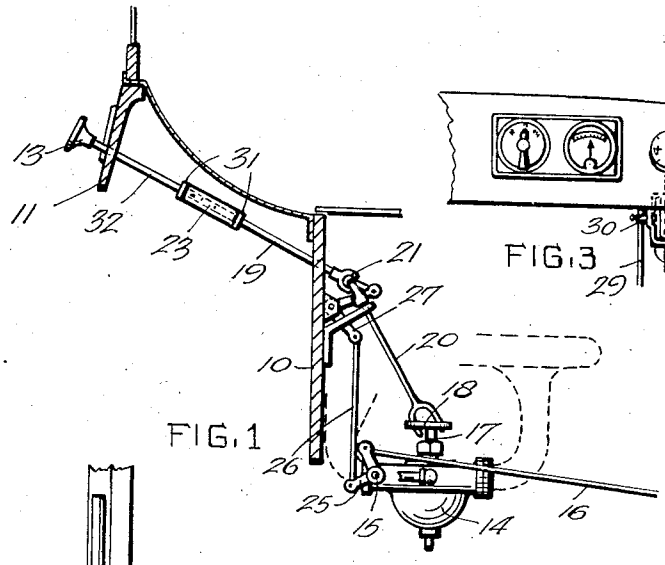

FIG. 1

FIG. 3

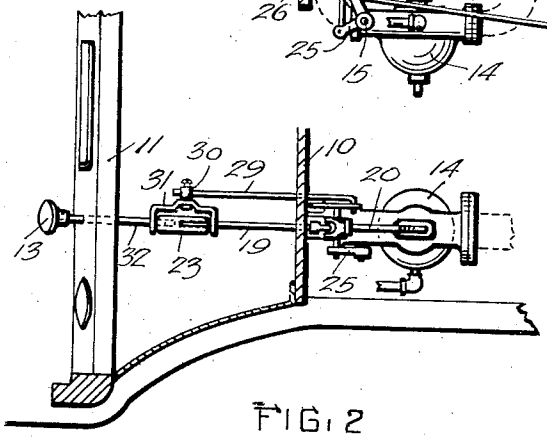

FIG. 2

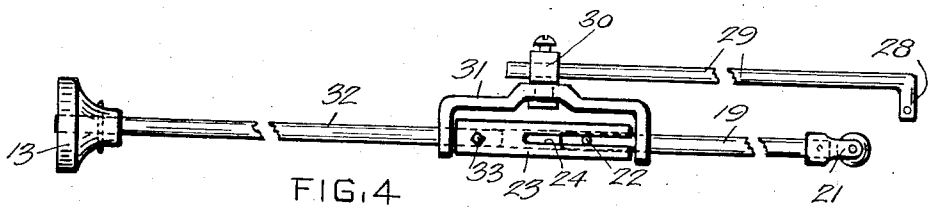

FIG. 4

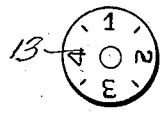

FIG. 6

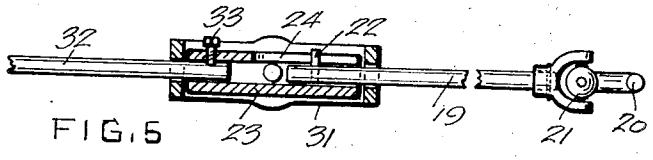

FIG. 5

INVENTOR.

WILLIAM DESHLER WARNER

BY

Shigley & Harney

ATTORNEYS

UNITED STATES PATENT OFFICE.

WILLIAM D. WARNER, OF COLUMBUS, OHIO, ASSIGNOR OF ONE-HALF TO HORATIO J. FAIRCHILD, OF KALAMAZOO, MICHIGAN.

CARBURETER CONTROL.

1,400,110. Specification of Letters Patent. Patented Dec. 13, 1921.

Application filed January 24, 1920. Serial No. 353,323.

To all whom it may concern:

Be it known that I, WILLIAM D. WARNER, a citizen of the United States of America, residing at Columbus, in the county of Franklin and State of Ohio, have invented certain new and useful Improvements in Carbureter Controls, of which the following is a specification.

My present invention relates to a well known type of automobile whose carbureter is commonly controlled by a rotatable button on the dash as to its working mixture, and whose air supply to the carbureter can be choked for a rich starting fuel, by means of a choker rod extending forwardly through the radiator so as to be accessible to the operator when cranking the engine by manual operation of the usual starting crank.

Where an automobile of this type is provided with a self starter of any known construction, it is obviously desirable to be able to operate the choker valve from the dash, and to do this ordinarily requires a separate dash control, involving greater complications and additional boring of the dash board.

My present invention aims to accomplish the above by the provision of a dash carried control member movable toward and away from the dash for control of the choker valve, and rotatable for control of the needle or mixture regulating valve, together with connections permitting control of each valve by the respective movement of the control member, independent of, and without effecting, the other valve.

With these objects in mind, the following description of my invention will be better understood in its reference to the several parts shown in the accompanying drawing. This drawing forms a part of the following specification and includes several figures of which,

Figure 1 is a vertical longitudinal section illustrating the practical application of my invention,

Fig. 2 is a horizontal section,

Fig. 3 is a face view of a portion of the instrument board,

Fig. 4 is a top plan view of the control member and certain of the connections,

Fig. 5 is a sectional view through certain of the connections, and

Fig. 6 is a face view of the control button.

Referring now to these figures I have shown portions of a well known type of vehicle, of which portions 10 is the dash board and 11 the instrument board, both of which form parts of the dash as a whole, and the latter of which more particularly supports the usual indicating instruments and the like shown in Fig. 3, including a speedometer 12 and a control member having a button 13.

The carbureter is generally indicated at 14, having a valve 15 in its air supply, for the control of which the usual choker rod 16 extends forwardly through the radiator (Not shown.) The carbureter also has a regulating valve for its working mixture provided with an upright stem 17, the upper apertured disk 18 of which is loosely engaged by the lower forked end of a connecting rod in upper and lower sections 19 and 20, the adjacent ends of which sections have a universally movable connection at 21.

The upper section 19 of the regulating rod is rotatably mounted on an upwardly and rearwardly inclined angle through the dash board 10 and is in accordance with my present invention provided with a laterally projecting pin 22 at its upper rear end as seen most clearly in Fig. 5, this end of the rod being axially shiftable in a sleeve 23 through a lengthwise slot 24 of which the pin 22 extends, so that the rod section 19 is thus rotatable with the sleeve 23 although it permits the latter to shift lengthwise thereof without actuation of the mixture regulating valve.

The choker rod 16 is connected to one arm of a bell crank 25 on the stem of the choker valve, the other arm of which is in accordance with my invention engaged by the lower end of a connecting rod 26 whose outer end is connected to one arm of a bell crank 27. To the other arm of the last mentioned bell crank is connected one angular end 28 of a connecting rod 29 whose opposite end is extended through, and adjustably connected to, a set collar 30 swiveled in connection with a yoke 31. This yoke has apertured extensions between which the sleeve 23 is lengthwise disposed, the upper section 19 of the mixture controlling rod passing loosely through one apertured extension, and the lower forward end of the stem 32 of the control member passing loosely through the other apertured extension of the yoke and into one end of the sleeve 23 in which it is securely fastened by a set screw 33.

The upper rear end of the stem 32 is rigidly connected to the control button 13

before described and thus when the latter is rotated, its rotating movement is communicated through the sleeve 23 and through the sections 19 and 20 of the mixture controlling rod to the mixture regulating valve stem 17, without effecting the choker valve connections, in view of the fact that both the stem 32 and the rod section 19 are freely rotatable through the extensions of yoke 31.

In a similar manner when a rich starting fuel is desired, the button 13 is pulled upwardly and rearwardly and it is thus obvious that this movement will be communicated to the yoke 31 in view of the disposition of sleeve 23 between portions of the yoke, and will thus be communicated through the rod 29, bell crank 27, and rod 26, to the bell crank 25 of the choker valve. It is likewise obvious that this latter movement will not effect the mixture regulating valve connections in view of the fact that rod section 19 slides in the sleeve 23.

In this way my invention permits of independent control of the chocker valve and the mixture regulating valve from the same control member so that with machines having self starters, whereby dash control of both valves is highly to be desired, if not essential, such control may be readily accomplished without additional boring of the instrument board and without duplicating the control member as is now necessary.

I claim:

1. An automobile having a carbureter provided with a mixture regulating valve and an air supply provided with a choker valve, control rods movably connected to the said choker valve and the said regulating valve, a yoke carried by the rod of the chocker valve, having apertured extensions through one of which the rod of the regulating valve is rotatable, a control member including a button and a stem, the latter of which is rotatable through the other yoke extension, a sleeve disposed between the extensions of the yoke member and within one end of which the adjacent end of the control stem is secured, said sleeve having a lengthwise slot and slidably receiving in its opposite end the adjacent end of the rod of the regulating valve, and a pin projecting from the rod of the regulating valve through the slot of the sleeve for the purpose described.

2. An automobile having a carbureter provided with a mixture regulating valve and a choker valve, a rotatable rod movably connected to the regulating valve, a lengthwise shiftable rod movably connected to the choker valve, a control member including a button and a stem mounted to rotate and shift in the direction of its length, and connections between the said stem and the rods of the choker valve and regulating valve arranged to communicate lengthwise movements of the stem to the former and rotating movements of the stem to the latter, said connections including a yoke carried by the choker valve rod, and a sleeve within and movable with the yoke to which the stem is connected, and in which the rod of the regulating valve is slidable and non-rotatable.

3. A device of the character described comprising a control rod in two axially alined sections, a connection between said sections including a sleeve secured to one section and having a slidable and non-rotatable connection with the other section, a yoke having apertured extensions through which said sections are rotatable and between which said sleeve is positioned, and a second control rod connected to said yoke, as and for the purpose described.

4. A device for use in connection with an automobile having a carbureter provided with a mixture regulating valve and an air supply having a choker valve, said device comprising control rods operatively connected to the said choker valve and the said regulating valve, the control rod of the regulating valve having a control button at one end and being in two axially alined sections slidable relatively to one another and constrained to simultaneous rotation, a yoke having extensions through which said rod sections are rotatable, a sleeve within the yoke around the adjacent ends of the rod sections and connected to one of the rod sections to engage and move the yoke when the last mentioned rod section is shifted in the direction of its length, and a swiveled connection between the choker valve control rod and the said yoke, as described.

5. The combination with a carbureter including a choker valve and a fuel valve, of a control rod mounted for longitudinal and rotative adjustment and having connections to said control valve and fuel valve including a universal joint, a bell crank lever, a link connecting one arm of said lever to said choker valve, and a link connected to the other arm of said lever and having a connection to said control rod permitting relative movement thereof whereby said choker valve is actuated by the longitudinal movement of said control rod and said fuel valve is adjusted by the rotative movement thereof.

In testimony whereof I affix my signature.

WILLIAM D. WARNER.