(No Model.) 3 Sheets—Sheet 1.

W. R. CLAY.

BURNER FOR INCANDESCENT GAS LIGHTING.

No. 590,359. Patented Sept. 21, 1897.

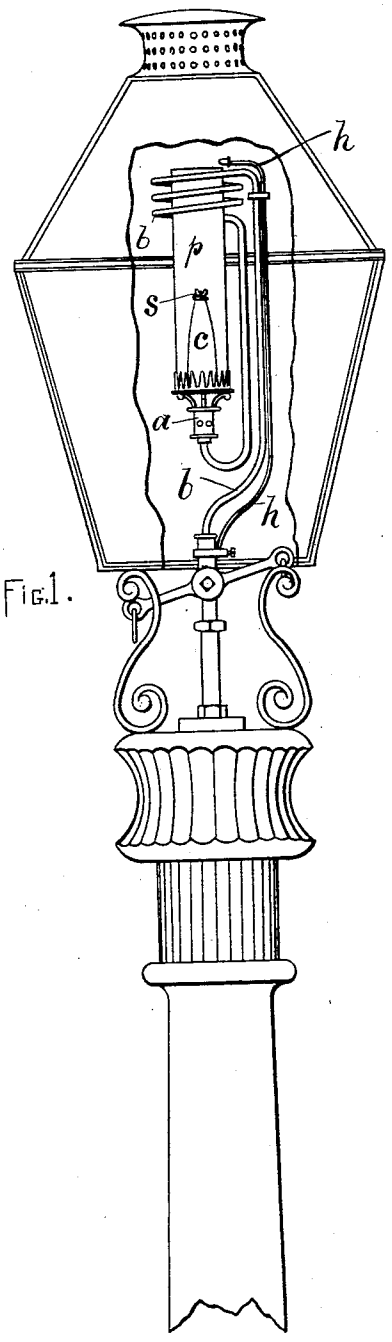

Fig. 1.

Witnesses:
A. D. Harrison
P. W. Pezzetti

Inventor
W. R. Clay
by Wright Brown & Quinby
Attorneys

THE NORRIS PETERS CO., PHOTO-LITHO., WASHINGTON, D. C.

(No Model.) 3 Sheets—Sheet 2

W. R. CLAY.

BURNER FOR INCANDESCENT GAS LIGHTING.

No. 590,359. Patented Sept. 21, 1897.

Fig. 2

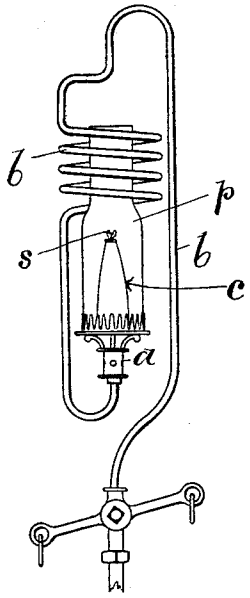

Fig. 3

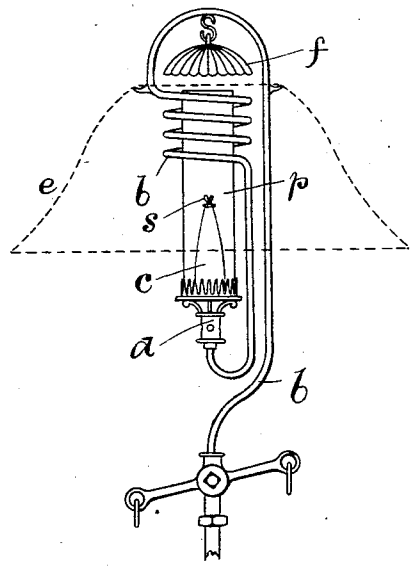

Fig. 5



Fig. 4

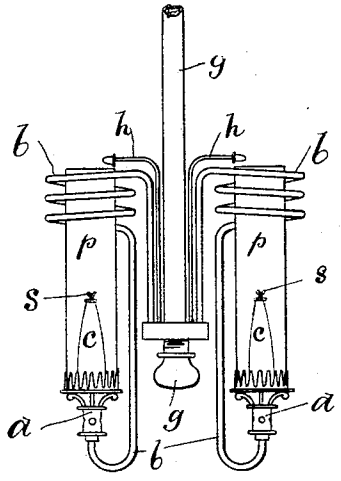

Fig. 6

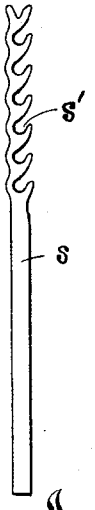

Witnesses
A. D. Harrison.
P. W. Pezzetti

Inventor
W. R. Clay
by Wright Brown Quinby
Attorneys

THE MORRIS PETERS CO., PHOTO-LITHO., WASHINGTON, D. C.

(No Model.) 3 Sheets—Sheet 3.

W. R. CLAY.

BURNER FOR INCANDESCENT GAS LIGHTING.

No. 590,359. Patented Sept. 21, 1897.

Fig. 7

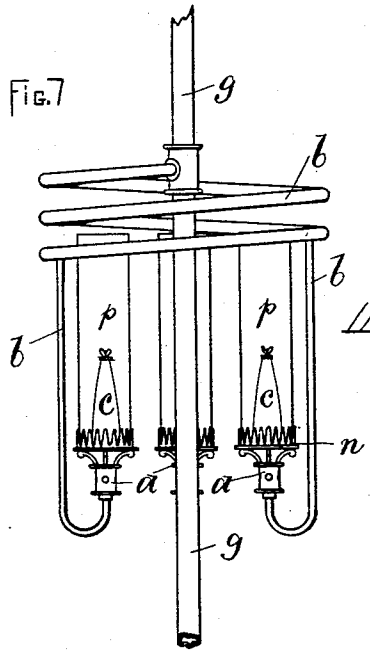

Fig. 9

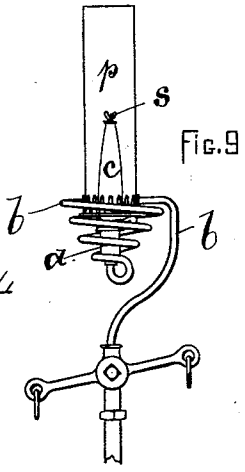

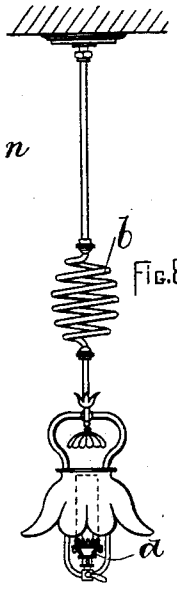

Fig. 8

Fig. 10

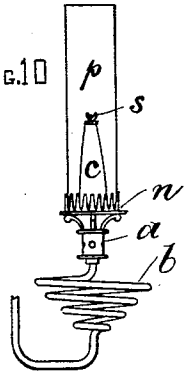

Fig. 11

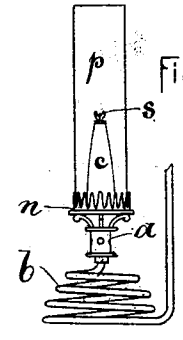

Fig. 12

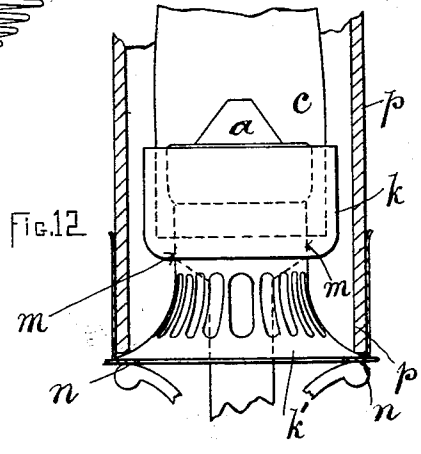

Fig. 13

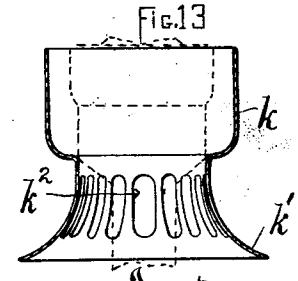

Witnesses
A. D. Harrison
P. W. Pezzetti

Inventor
W. R. Clay
by Wright Brown & Quinby
Attorneys

THE NORRIS PETERS CO., PHOTO-LITHO., WASHINGTON, D. C.

UNITED STATES PATENT OFFICE.

WILLIAM RICHARD CLAY, OF FARNWORTH, ENGLAND.

BURNER FOR INCANDESCENT GAS-LIGHTING.

SPECIFICATION forming part of Letters Patent No. 590,359, dated September 21, 1897.

Application filed May 27, 1896. Serial No. 593,267. (No model.)

To all whom it may concern:

Be it known that I, WILLIAM RICHARD CLAY, a subject of the Queen of Great Britain, residing at Slater Street, Farnworth, near Bolton, Lancaster county, England, have invented a new and useful Improvement in Burners for Incandescent Gas-Lighting, of which the following is a specification.

In connection with incandescent gas-lighting much inconvenience and loss are experienced and entailed by reason of the excessive delicacy, fragility, or brittleness of the incandescent substances or articles produced out of them, for which reason street or like public lighting by these incandescent means has heretofore been attended with the greatest difficulties, since often the vibrations of the burner, caused by a passing vehicle, have been sufficient to completely destroy the useful properties of the incandescent article, causing it to break away in pieces or even to fall to dust. Again, it has been found to add greatly to the efficiency of the combustible gas, provided it is fed to the flame at a high temperature, while further, as is well known, the loose edges of the incandescent articles, which are in an ordinary way entirely exposed to the friction of the currents of air flowing to support combustion, deteriorate, and portions of them are broken off long prior to the other parts of said articles being worn out. To obviate these difficulties by the application of means for counteracting or otherwise changing the nature of the vibratory motions of the burners and for enabling the heat of the flame to be transmitted or imparted to or utilized for heating the combustible gas as it is being fed to the flame, as well as by the application of means for protecting the loose edges of the incandescent articles, is the object of this invention, and this object I attain by the means hereinafter described, the same being illustrated by the accompanying sheets of drawings, in which—

Figure 1 is an elevation of an ordinary street-lamp, shown as with a portion of the lantern or cover cut away in order that my improved burner might be more clearly illustrated within it. Fig. 2 is an elevation showing my improved burner in one of its simplest forms. Fig. 3 is a similar elevation to Fig. 2, but shows the manner in which a shade and cover may be applied in connection therewith. Fig. 4 illustrates a method whereby a single suspended pipe may supply gas to more than one of my improved burners. Figs. 5 and 6 are side and edge views, drawn to an enlarged scale, of a part hereinafter described. Fig. 7 is an elevation illustrative of a method whereby several of my improved burners may be arranged to be fed and supported by a single supply-pipe extending vertically. Fig. 8 is an elevation showing an arrangement of suspending my improved burner where the use of the heat from the flame is not so extensively employed for heating the combustible gas fed thereto. Figs. 9, 10, and 11 are elevations illustrating methods of mounting my improved burner that I employ when the heating of the combustible gas to be supplied thereto is not desired. Figs. 12 and 13 are an elevation and a section of the shield or cover for protecting the incandescent article.

Similar letters of reference indicate similar parts throughout the several views.

In carrying my invention into effect I make a portion *b* of the pipe which conducts gas to the burner *a* integral with or as part of said burner *a*, and this part *b* of the supply-pipe, which I make of an appropriately coiled or spiral form, answers or is used at all times as the support for the burner *a* and the incandescent article *c*, and since the said coiled or spiral formation brings the supporting part *b* into such a condition as to make it have considerable resilience the parts supported by it are protected against the damaging effects of the vibratory movements of adjoining bodies, for the reason that all such movements have to traverse this resilient supporting-pipe prior to reaching the parts it supports. Hence those of the said vibratory movements which are not entirely lost in the said resilience of the part *b* are so far checked by it as to have their jerky or sudden changes of direction so altered as to reduce their damaging actions on the article *c* to a minimum.

No particular material is necessary out of which to make the supply-pipe, but this is regulated as is also the size of the pipe and of the coils by the kind of burner employed. Ordinary gas-piping would answer very well for very large burners, provided very large coils were formed, while smaller burners, as

those commonly used, would require piping made out of very thin material. Small copper piping has been found to operate satisfactorily for comparatively small burners.

In order that the heat of the flame may be utilized for raising the temperature of the gas supplied to it through the part *b*, the coiling of this part *b* is arranged to be above and about the incandescent article *c*, as shown by Figs. 1, 2, 3, 4, and 7.

A simple form of coiling the part *b* is shown by Figs. 1 and 2, while in Fig. 3 a method is shown whereby a shade or deflector *e* and cover *f* might be supported by the part *b*, or several of the simple forms of coiled parts *b* may be arranged to be supported by a central supply-pipe *g*, as shown by Fig. 4. Again, one coiled part *b* may be formed integrally with several burners *a*, as shown by Fig. 7, since in this as well as in all the foregoing cases the counteracting properties of the said resilient part *b* are brought fully into use, while the position it occupies enables the heat from the flame to be transmitted to the gas being fed thereto. Further, where the heating of the gas is not to be considered then the part *b* may be either above the burner *a*, as shown by Fig. 8, or below same, as shown by Figs. 9, 10, and 11, and whenever desired by-pass pipes *h* may be arranged with these burners, as shown by Figs. 1 and 4, in order to supply gas to a small flame for igniting purposes as occasion or necessity may require or show to be desirable.

To protect the lower edges of the incandescent articles *c*, I form a metal shield *k* to encircle the outer edge of said article *c*, as shown by Fig. 12, as also to fit as tightly as convenient against the cylindrical part *m* of the burner *a*, while the lower edge *k'* of the shield *k* opens out to somewhat bell-mouth shape in order that it may rest upon the part *n*, which supports the chimney *p*, ventilating-holes k^2 being made in the shield *k* to allow the air to flow freely to the flame.

Under most circumstances it is found that the lower edges of the article *c* deteriorate more quickly than any other parts of them. Hence it is desirable to lower these articles as they thus wear away, so that they will be brought into the most desirable part of the flame. To accomplish this, I make the central support *s* to have a series of hooks *s'* extending vertically, as shown by Figs. 5 and 6, so that the supporting or cross piece of the article *c* may be made to take over one or other of these hooks *s'* as its position may be most appropriate.

Such being the nature and object of my invention, what I claim is—

1. The combination with a burner for incandescent gas-lighting, of a gas-supply pipe wholly supporting said burner and coiled to provide resiliency and absorb vibration, substantially as described.

2. The combination with the parts forming an incandescent gas-burner of a spiral, or coiled resilient supply-pipe for supporting the other parts forming said burner, said supply-pipe being coiled around or arranged near the flame of the said burner substantially as and for the purposes specified.

3. The combination with an incandescent gas-burner of a fixed supporting-piece having a vertical series of hooks for holding the incandescent article or part of said burner substantially as herein specified.

WILLIAM RICHARD CLAY.

Witnesses:
RD. B. NICHOLLS,
SAMUEL HEY.