(19) Europäisches Patentamt
European Patent Office
Office européen des brevets

(11) **EP 1 947 626 A3**

(12) **EUROPEAN PATENT APPLICATION**

(88) Date of publication A3:
29.04.2009 Bulletin 2009/18

(43) Date of publication A2:
23.07.2008 Bulletin 2008/30

(21) Application number: **08000931.9**

(22) Date of filing: **18.01.2008**

(51) Int Cl.:
G09F 7/08 *(2006.01)* ***G09F 7/18*** *(2006.01)*
G09F 15/00 *(2006.01)*

(84) Designated Contracting States:
AT BE BG CH CY CZ DE DK EE ES FI FR GB GR HR HU IE IS IT LI LT LU LV MC MT NL NO PL PT RO SE SI SK TR
Designated Extension States:
AL BA MK RS

(30) Priority: **18.01.2007 IT MI20070064**

(71) Applicant: **Wallcovering Pubblicità Srl**
20123 Milano (IT)

(72) Inventor: **Noti, Davide**
20123 Milano (IT)

(74) Representative: **Ferroni, Filippo**
Vicolo Giardino, 3
20121 Milano (IT)

(54) Support for road signs

(57) The invention relates to a support for road signs consisting of a first polygonal section bar (1) to a vertex of which a second "C" section bar (3) is secured.

The second section bar (3) is used for applying road signs (10), the edge of which can be easily inserted therein, so that road signs can be easily replaced, added or removed.

Advantageously, the first section bar (1) may have an open cross-section, thus acting as a sheath around existing tubular posts (2) for road signs.

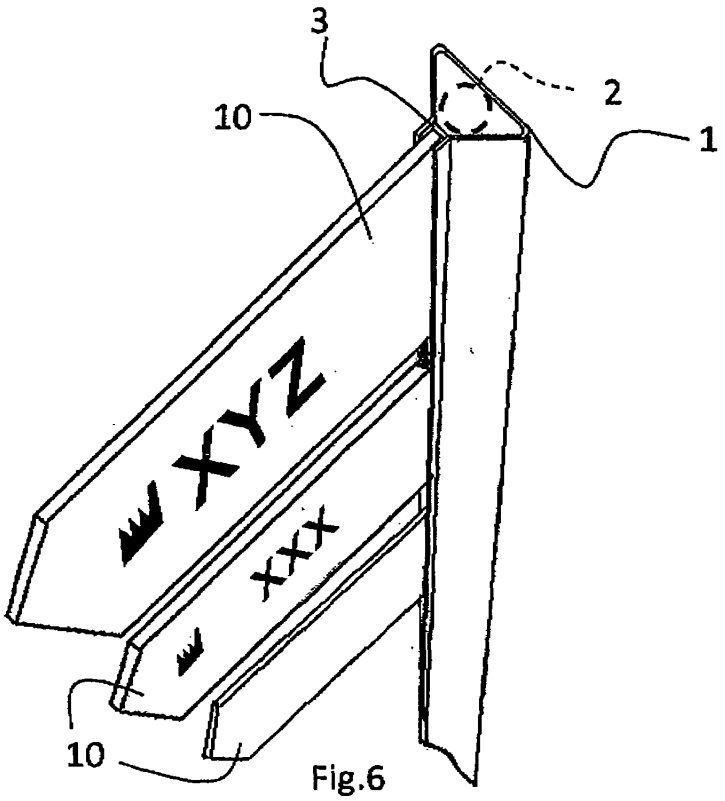

Fig.6

EP 1 947 626 A3

Europäisches Patentamt
European Patent Office
Office européen des brevets

EUROPEAN SEARCH REPORT

Application Number
EP 08 00 0931

DOCUMENTS CONSIDERED TO BE RELEVANT

Category	Citation of document with indication, where appropriate, of relevant passages	Relevant to claim	CLASSIFICATION OF THE APPLICATION (IPC)
X	DE 20 2006 004998 U1 (STROEER OUT OF HOME MEDIA AG [DE]) 22 June 2006 (2006-06-22) * paragraph [0026] - paragraph [0035] * * figures 1-10 *	1-5,7, 9-15	INV. G09F7/08 G09F7/18 G09F15/00
X	FR 2 688 865 A (BOULEAU GERARD [FR]; SIBLEYRAS GEORGES [FR]) 24 September 1993 (1993-09-24) * page 1, line 1 - line 11 * * page 5, line 9 - page 6, line 27 * * figures 1-10 *	1-7,9-15	
X	JP 08 123329 A (NIPPON LIGHT METAL CO) 17 May 1996 (1996-05-17) * abstract; figures 1-8 *	1-3,5-19	
X	FR 2 309 695 A (MIDLAND EXTRUSIONS LTD [GB]) 26 November 1976 (1976-11-26) * the whole document *	15	
A	CH 488 910 A (NOKIA OY AB [FI]) 15 April 1970 (1970-04-15) * the whole document *	1-15	TECHNICAL FIELDS SEARCHED (IPC) G09F E01F E04H

The present search report has been drawn up for all claims

Place of search	Date of completion of the search	Examiner
The Hague	23 March 2009	Pantoja Conde, Ana

CATEGORY OF CITED DOCUMENTS

X : particularly relevant if taken alone
Y : particularly relevant if combined with another document of the same category
A : technological background
O : non-written disclosure
P : intermediate document

T : theory or principle underlying the invention
E : earlier patent document, but published on, or after the filing date
D : document cited in the application
L : document cited for other reasons

& : member of the same patent family, corresponding document

EPO FORM 1503 03.82 (P04C01)

ANNEX TO THE EUROPEAN SEARCH REPORT ON EUROPEAN PATENT APPLICATION NO. EP 08 00 0931

This annex lists the patent family members relating to the patent documents cited in the above-mentioned European search report. The members are as contained in the European Patent Office EDP file on
The European Patent Office is in no way liable for these particulars which are merely given for the purpose of information.

23-03-2009

Patent document cited in search report	Publication date	Patent family member(s)	Publication date
DE 202006004998 U1	22-06-2006	NONE	
FR 2688865 A	24-09-1993	NONE	
JP 8123329 A	17-05-1996	NONE	
FR 2309695 A	26-11-1976	GB 1536546 A	20-12-1978
		IE 42587 B1	10-09-1980
CH 488910 A	15-04-1970	FI 43784 B	01-03-1971
		SE 321257 B	02-03-1970

EPO FORM P0459

For more details about this annex : see Official Journal of the European Patent Office, No. 12/82