United States Patent [19]

Moriya

[11] **3,764,256**

[45] **Oct. 9, 1973**

[54] **PIEZOELECTRIC GAS LIGHTER**

[75] Inventor: **Nobuyoshi Moriya,** Urawa, Japan

[73] Assignee: **Mansei Kogyo Kabushiki Kaisha,** Kawaguchi-shi, Saitama, Japan

[22] Filed: **Sept. 14, 1972**

[21] Appl. No.: **288,990**

[30] **Foreign Application Priority Data**

Sept. 28, 1971 Japan 46/88405
Dec. 14, 1971 Japan 46/118799

[52] **U.S. Cl.** **431/255,** 317/81
[51] **Int. Cl.** **F23q 2/00**
[58] **Field of Search** 431/255, 264; 317/81

[56] **References Cited**

UNITED STATES PATENTS

3,425,783	2/1969	Gotu	431/255
3,494,710	2/1970	Inagaki	431/255 X
3,506,386	4/1970	Gotu	431/255

Primary Examiner—Edward G. Favors
Attorney—James E. Armstrong et al.

[57] **ABSTRACT**

A piezoelectric gas lighter having a casing; a fuel reservoir disposed within said casing; a burner valve associated with the fuel reservoir for permitting the egress of fuel therefrom; a piezoelectric generator housed in the casing and having a piezoelectric element for generating a high voltage in response to a compressive force and force means arranged in alignment with the piezoelectric element to exert the compressive force thereon; a block member disposed on the fuel reservoir; a thumb piece pivotally supported on the block member and rotatable in perpendicular relation to the movement of the force means of the piezoelectric generator; and a cam lever operatively associated with the thumb piece to transmit the movement of the thumb piece to the force means of the piezoelectric generator; and spark means connected to the piezoelectric element for igniting the fuel emitted by the burner valve in response to the high voltage whereby the rotation of the thumb piece causes the piezoelectric element to be applied with the compressive force in a direction perpendicular to the rotation through the cam lever to generate a high voltage in the piezoelectric element which actuates the spark means to ignite the fuel.

7 Claims, 4 Drawing Figures

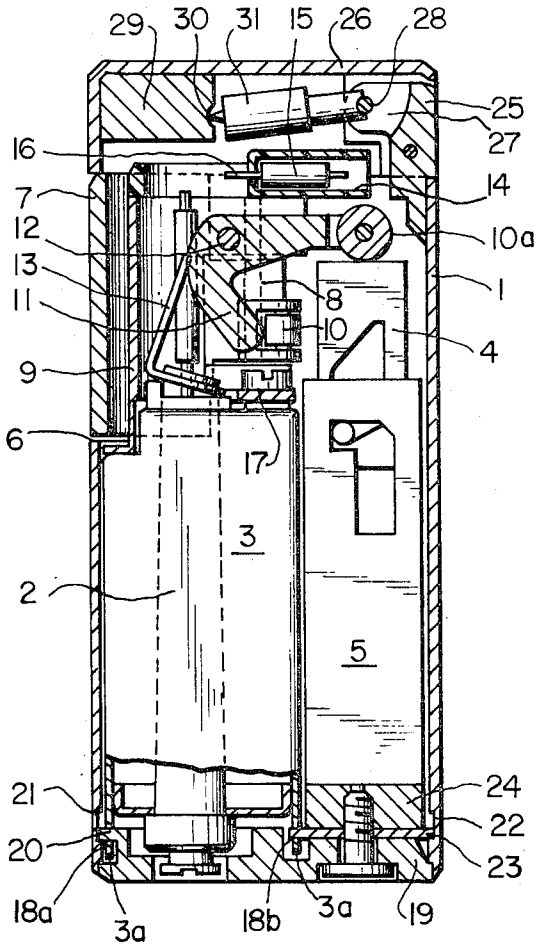

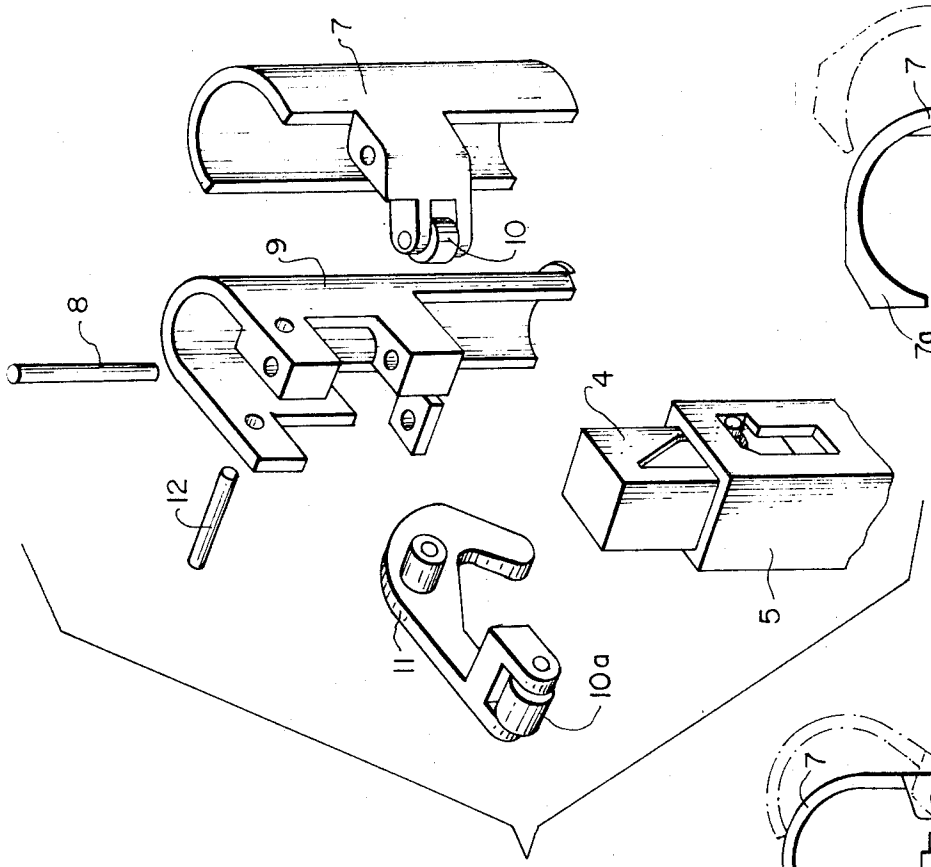

FIG. 2

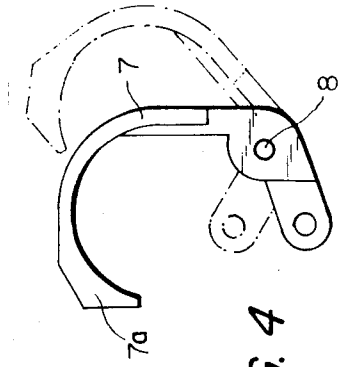

FIG. 4

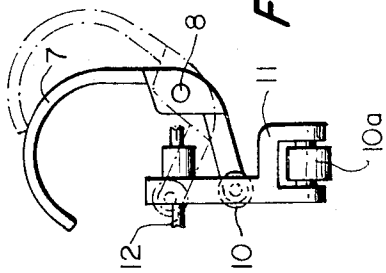

FIG. 3

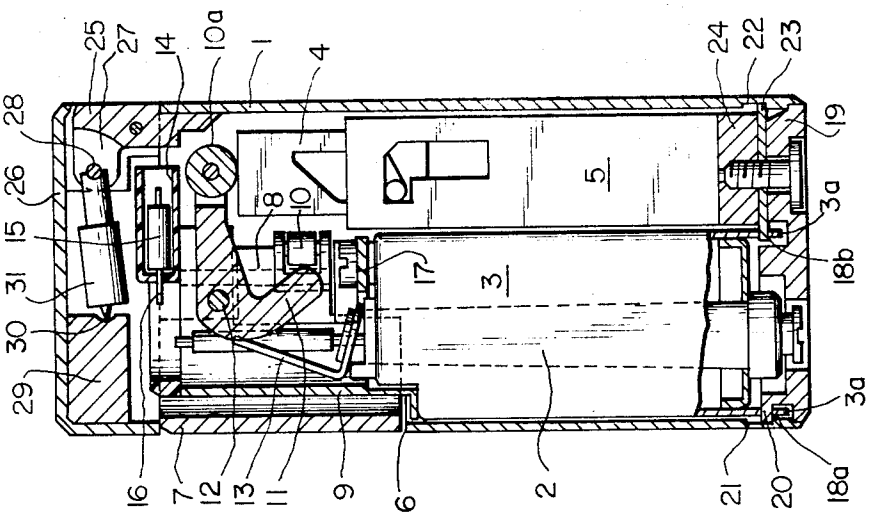

FIG 1

PIEZOELECTRIC GAS LIGHTER

BACKGROUND OF THE INVENTION

The present invention relates to a piezoelectric gas lighter and in particular to the operating device therefor.

It is already known in piezoelectric gas lighters to operate a high voltage generating device by using a thumb piece which is substantially rotatable perpendicularly to the longitudinal direction of a casing of the lighter in order to ignite gas.

The above-described known piezoelectric gas lighters have complicated structures in which the operating pressure applied on the thumb piece is not sufficiently transmitted to the high voltage generating device and also when the high voltage generating device is operated, correct operation is not achieved as the thumb on the thumb piece often slips.

It is an object of the present invention to provide a piezoelectric gas lighter in which simple and correct operation is achieved.

It is also an object of the present invention to provide a piezoelectric gas lighter which requires small operating pressure wherein the thumb piece is horizontally rotated relative to the longitudinal direction of the lighter.

SUMMARY OF THE INVENTION

A piezoelectric gas lighter comprising a casing; a fuel reservoir disposed within said casing; a burner valve associated with said fuel reservoir for permitting the egress of fuel therefrom; a piezoelectric generator housed in said casing and having a piezoelectric element for generating a high voltage in response to a compressive force and force means arranged in alignment with said piezoelectric element to exert said compressive force thereon; a block member disposed on said fuel reservoir; a thumb piece pivotally supported on said block member and rotatable in perpendicular relation to the movement of said force means of said piezoelectric generator; and a cam lever operatively associated with said thumb piece to transmit the movement of said thumb piece to said force means of said piezoelectric generator; and spark means connected to said piezoelectric element for igniting said fuel emitted by said burner valve in response to said high voltage whereby the rotation of said thumb piece causes said piezoelectric element to be applied with said compressive force in a direction perpendicular to said rotation through said cam lever to generate a high voltage in the piezoelectric element which actuates said spark means to ignite said fuel. Preferably, said thumb piece includes at one end thereof a roller rotatably supported thereon and at the other end an actuating means adapted to receive an operating force effecting the rotation of said thumb piece, said roller is operatively associated with said cam lever to transmit said operating force to said piezoelectric generator. Advantageously, said actuating means of said thumb piece is provided thereon at the most distant surface from the pivot of said thumb piece in order to prevent a thumb from slipping off from said thumb piece. Suitably, said cam lever has at one end thereof a portion actuated by said roller of said thumb piece and at the other end thereof a roller pivotally supported thereon to apply a compressive force to said piezoelectric generator. Further, said cam lever has at least one portion adapted in the operative condition of the lighter to engage a control lever to open said burner valve. Each roller respectively formed on said thumb piece and said cam lever is preferably of synthetic resins. According to a further embodiment of the invention, said lighter includes a cap pivotally mounted on an upper open end of said casing and thumb piece is concealed therein, in the inoperative position of the lighter. Most preferably, said piezoelectric generator includes a piezoelectric element; a housing receiving said piezoelectric element; a hammer movable in said housing in alignment with an axis of said piezoelectric element; a spring disposed at one end thereof on said hammer; a pin supported in said hammer and having an extended portion which abuts on an opening of said housing; and a depressible operating piece adapted to load said spring and having securing means for holding said pin in engagement with the opening of the housing in an inoperative position thereof, wherein the depression of said operating piece causes said spring to accumulate energy therein which, when sufficient energy has been accumulated, causes the securing means of said operating piece to release the engagement between said pin of said hammer and said opening of the housing to drive said hammer towards said piezoelectric element thereby imparting a blow on the piezoelectric element so as to generate a high voltage therein.

BRIEF DESCRIPTION OF THE DRAWINGS

The invention will now be described in greater detail hereinafter by way of example with reference to the accompanying drawings in which:

FIG. 1 is a cross-sectional view of a piezoelectric gas lighter according to the present invention;

FIG. 2 is a perspective view of the gas lighter showing the essential part of the present invention on an enlarged scale;

FIG. 3 shows a thumb piece of the gas lighter according to the present invention in an operative position; and FIG. 4 depicts the modified form of FIG. 3 according to the present invention.

The piezoelectric gas lighter illustrated in the drawings, includes casing **1** formed with two open ends into which piezoelectric generator **5** and fuel reservoir **3** provided with a burner valve **2** are respectively received. Piezoelectric generator **5**, consisting of operating piece **4**, force means (not shown) actuated by the operating piece **4** and a piezoelectric element (not shown), is arranged to generate a high voltage in the piezoelectric element. The depression of operating piece **4** causes the force means to exert a compressive force on the piezoelectric element to generate a high voltage therein.

Casing **1** is formed with cut-out portion **6** on the lateral wall thereof through which thumb piece **7** pretrudes. Thumb piece **7** is preferably provided with, on the illustrated surface with surface means **7a** (see FIG. **4**) to prevent a person's thumb from slipping off thumb piece **7**.

As shown in FIG. **1**, Block member **9** as shown in FIG. **1** is disposed on fuel reservoir **3** by screw member **17** within casing **1**. Block member **9** having a U-shaped, cross-sectional configuration and rotatably receives thumb piece **7** (also having a U-shaped configuration) via vertical pin **8** whereby thumb piece **7** is adapted to rotate perpendicularly relative to the direction of movement of operating piece **4**. Thumb piece **7** is pro-

vided at one end thereof with two arms which hold first roller **10** rotatably therebetween by a pin parallelling pin **8**. Roller **10** is adapted to engage cam lever **11** to effectively transmit the operating force applied to thumb piece **7** to cam lever **11**. Cam lever **11**, having an L-shaped configuration, is pivoted to block member **9** at its center portion by lateral pin **12** to rotate in such a direction that the transmitted operating force is applied to the piezoelectric element. As shown in FIG. **1**, cam lever **11** abuts at one end thereof first roller **10** of thumb piece **7** and at the other end via second roller **10***a* the upper portion of operating piece **4** of piezoelectric generator **5**.

Disposed adjacent to cam lever **11** is control lever **13** (having an L-shaped configuration in this embodiment) which engages the neck of burner valve **2** at one end thereof to open the burner valve. Control lever **13** may be formed by a plate member as in conventional lighters. In this case, the plate member also is arranged to engage a portion of cam lever **11** to move in a counter-clockwise direction.

Electrode cover member **14**, made of a heat-resistant insulator such as of synthetic resins, is secured to the upper portion of block member **9** and thus covers the upper open end of casing **1**. Electrode cover member **14** mounts at one end thereof one of a pair of discharge electrodes **16** electrically connected by way of resistor **15** to a terminal member of the piezoelectric element.

Fuel reservoir **3** has elongated side wall **3***a* wherein two openings **18***a* and **18***b* are formed respectively. Inserted into opening **18***a* is projection **20**, formed on the left end of bottom plate **19** covering the lower open end of casing **1**. Casing **1** is provided internally with depression **21** for receiving projection **20** of bottom plate **19**. Casing **1** is also provided with depression **22** on the right-hand side thereof for receiving one end of plate member **23**, the other end of which is supported in opening **18***b* in the side wall of reservoir **3**. Bottom plate **19** is disposed together with spacer member **24** via a screw member under piezoelectric generator **5** thereby conveniently securing the inner mechanism within casing **1** of the lighter.

Hinge member **25**, supported on the upper open end of casing **1**, is adapted to permit the opening and closing of cap **26**, shown covering the upper open end of casing **1** in an inoperative position. The upper portion of hinge member **25** is provided with groove **27** wherein pin **28** is horizontally disposed. Between pin **28** and notch **30** of block **29** received within cap **26**, is positioned cylinder **31** adapted to facilitate the opening and closing movement of cap **26** under the influence of a spring (not shown) in the cylinder.

To initiate operation of the lighter, cap **26** is rotated about hinge member **25** into the open position. Thumb piece **7** is then moved in a clockwise direction about vertical pin **8** to rotate by means of first roller **10** cam lever **11** about horizontal pin **12** thereby depressing operating piece **4** via second roller **10***a* to give the accumulated energy to operating piece **4**. When the energy accumulates sufficiently operating piece **4** is driven onto the piezoelectric element to exert a pressure thereon in order to generate a high voltage therein.

During this operation, cam lever **11** rotates control lever **13** in a counter-clockwise direction to open burner valve **2** to emit gas therefrom. The emitted gas fuel is then ignited by the spark discharge between discharge electrode **16** and the opposite electrode (shown as the upper end of the burner valve **2** in this embodiment). When it is desired to extinguish the flame, thumb pressure on thumb piece **7** is released, so that operating piece **4** rises under the influence of a spring (not shown) returning both cam lever **11** and thumb piece **7** to their initial positions. Consequently, the engagement between cam lever **11** and control lever **13** is also released to shut burner valve **2** and extinguish the flame.

As described above, the present invention comprises a thumb piece pivoted associated with a block member by a vertical pin and adapted to rotate perpendicularly relative to the direction of movement of an operating piece; a cam lever pivotally connected at its center portion to the block member by a lateral pin to rotate in the direction of movement of the operating piece, the cam lever abuting at one end thereof on one portion of the roller of the thumb piece and at the other end thereof on the operating piece of the piezoelectric generator.

The present invention has therefore the following advantages:

a. As the lighter according to the present invention is arranged to effectively utilize the leverage of the thumb piece, simple and correct operation is possible.

b. The present invention proposes a unique design for gas lighter utilizing a high voltage generating device therein.

c. The present invention offers a simple and compact construction for lighters.

d. The present invention is suitable for the practical use of a lighter.

While several embodiments of the invention have been shown and described, other variations will be readily apparent to those skilled in the art. Therefore, the invention is not limited to these embodiments but is intended to cover all such variations as may be within the scope of the invention defined by the following claims.

I claim:

1. A piezoelectric gas lighter comprising a casing; a fuel reservoir disposed within said casing; a burner valve associated with said fuel reservoir for permitting the egress of fuel therefrom; a piezoelectric generator housed in said casing and having a piezoelectric element for generating a high voltage in response to a compressive force and force means arranged in alignment with said piezoelectric element to exert said compressive force thereon; a block member disposed on said fuel reservoir; a thumb piece pivotally supported on said block member and rotatable in perpendicular relation to the movement of said force means of said piezoelectric generator; and a cam lever operatively associated with said thumb piece to transmit the movement of said thumb piece to said force means of said piezoelectric generator; and spark means connected to said piezoelectric element for igniting said fuel emitted by said burner valve in response to said high voltage whereby the rotation of said thumb piece causes said piezoelectric element to be applied with said compressive force in a direction perpendicular to said rotation through said cam lever to generate a high voltage in the piezoelectric element which actuates said spark means to ignite said fuel.

2. A lighter according to claim **1**, wherein said thumb piece includes at one end thereof a roller rotatably supported thereon and at the other end an actuating means

adapted to receive an operating force effecting the rotation of said thumb piece, said roller is operatively associated with said cam lever to transmit said operating force to said piezoelectric generator.

3. A lighter according to claim **2**, wherein said actuating means of said thumb piece is provided thereon at the most distant surface from the pivot of said thumb piece in order to prevent a thumb from slipping off from said thumb piece.

4. A lighter according to claim **2**, wherein said cam lever has at one end thereof a portion actuated by said roller of said thumb piece and at the other end thereof a roller pivotally supported thereon to apply a com-

pressive force to said piezoelectric generator.

5. A lighter according to claim **4**, wherein said cam lever has at least one portion adapted in the operative condition of the lighter to engage a control lever to open said burner valve.

6. A lighter according to claim **4**, wherein each roller respectively formed on said thumb piece and said cam lever is made of synthetic resins.

7. A lighter according to claim **1**, wherein said lighter includes a cap pivotally mounted on an upper open end of said casing and thumb piece is concealed therein in the inoperative position of the lighter.

* * * * *