Sept. 20, 1927. 1,642,861

L. B. TURNER

ELECTRIC RELAY

Original Filed Feb. 13, 1919 2 Sheets-Sheet 1

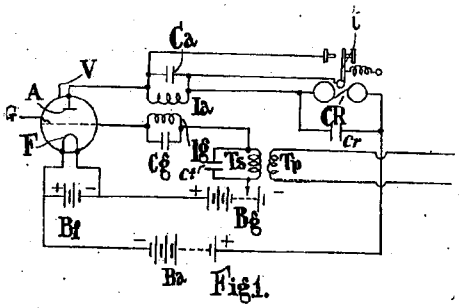

Fig. 1.

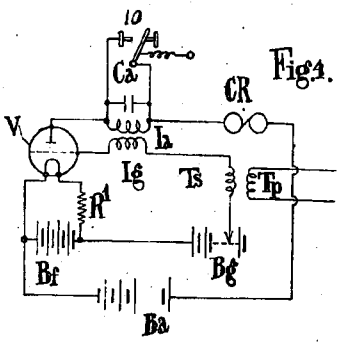

Fig. 4.

Fig. 2.

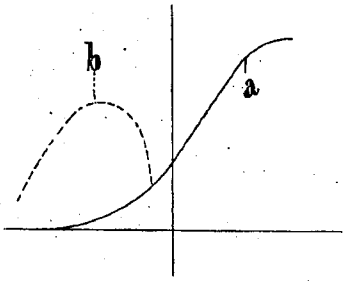

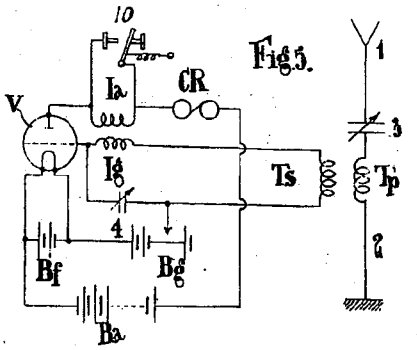

Fig. 5.

Fig. 3.

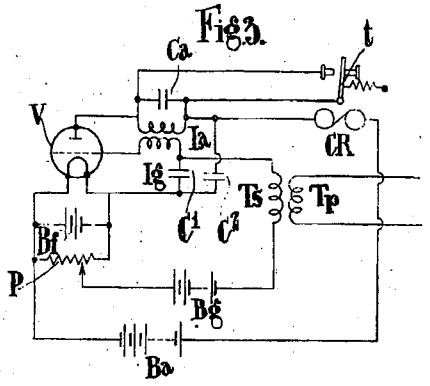

INVENTOR
L. B. Turner.
BY H. R. Kerslake.
ATTORNEY

Sept. 20, 1927. 1,642,861

L. B. TURNER

ELECTRIC RELAY

Original Filed Feb. 13, 1919 2 Sheets-Sheet 2

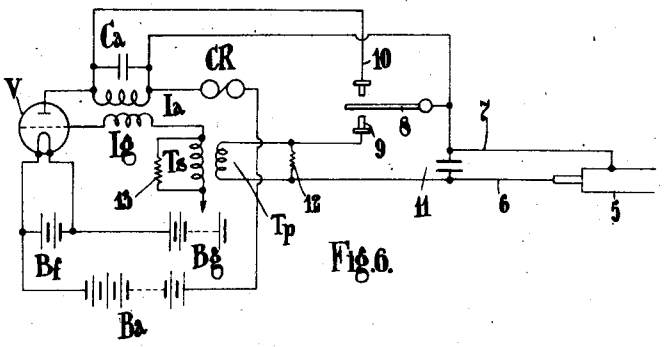

Fig.6.

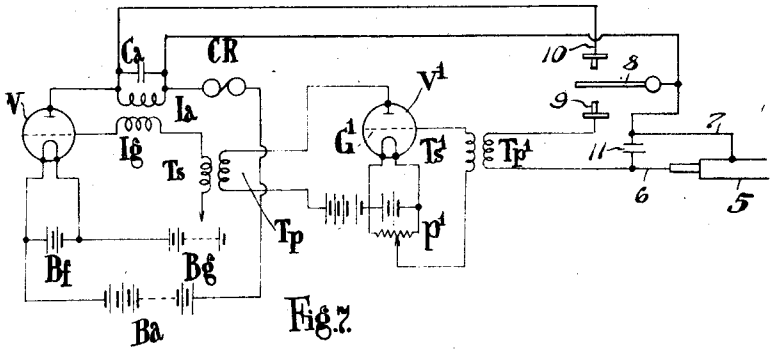

Fig.7.

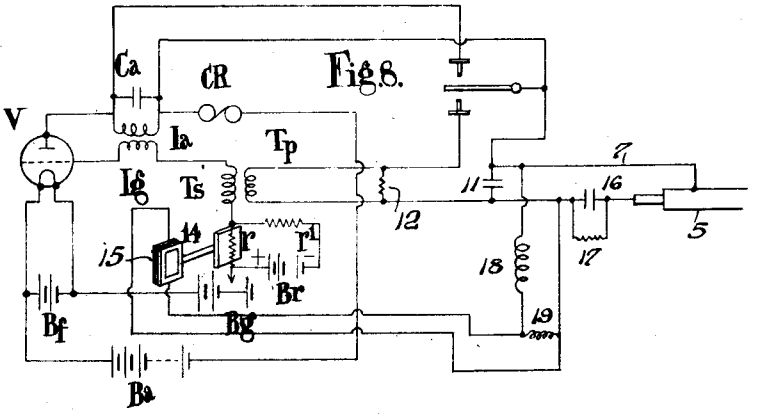

Fig.8.

INVENTOR
L. B. Turner.
BY H. R. Kerslake
ATTORNEY

Patented Sept. 20, 1927. 1,642,861

UNITED STATES PATENT OFFICE.

LAURENCE BEDDOME TURNER, OF CAMBRIDGE, ENGLAND, ASSIGNOR, BY MESNE ASSIGNMENTS, TO WESTINGHOUSE ELECTRIC & MANUFACTURING COMPANY, A CORPORATION OF PENNSYLVANIA.

ELECTRIC RELAY.

Application filed February 13, 1919, Serial No. 276,856, and in Great Britain February 16, 1918. Renewed July 5, 1923.

This invention relates to improved electric relays and electric relay circuits.

Vacuum valves consisting of a glowing cathode, a cold anode and a grid or perforated plate, all arranged in a vacuous, or nearly vacuous space, have hitherto been employed in wireless telegraphy and other arts for magnifying weak electric signals, for rectifying alternating currents, for generating electric oscillations, or for some combination of these functions. When used as an amplifier, the valve and its associated circuits are so arranged that a primary electromotive force of small power produces a secondary, generally larger, electromotive force of larger power, the wave form of which corresponds more or less to the wave form of the primary electromotive force. The term amplifier as defined by the operation just referred to is used in contradistinction to the term relay, which latter term is intended to define an instrument wherein the secondary effect is produced by, but is not a reproduction of, or proportional to, the primary electromotive force or current.

The arrangement forming the subject-matter of the present invention may be defined as a valve relay for the reason that use is made therein of a valve acting as a relay in the sense above referred to. The relay according to the present invention is similar to the more or less mechanical relays ordinarily employed in telegraphy with wires in the respect that it lacks the proportionality between the effect and the cause producing the same, and also in the respect that a very small primary power is sufficient to control a secondary power greatly exceeding the controlled secondary power which is obtainable when the same valve is used as an amplifier in the ordinary way.

It has previously been proposed in connection with electrical line signalling to receive the signals by superposing the received current by means of a transformer upon an oscillating circuit associated with an audion which is adjusted to about the critical point at which oscillation starts, thereby upsetting the critical point and starting oscillation in the said circuit, the resultant oscillatory current, which persists only so long as the signal persists, being received in a telephone or other receiving device. It has also been proposed in connection with the method of receiving signals just referred to, to render audible a received current of inaudible frequency, by subjecting such current to the action of a ticker and causing the interrupted current to act through a transformer upon an audion with which the receiving telephone is associated.

The invention consists in a valve relay capable of acting as a generator of oscillation, which is adjusted to be in unstable equilibrium at the critical point at which oscillation sets in, and arranged to be set in oscillation by the action of a small electric current, thereupon continuing to oscillate irrespective of the continuance of the said operating current, the accompanying increase in the mean anode current, or the oscillatory current, of the valve operating another relay, hereinafter referred to as a coarse relay or equivalent auxiliary indicating or relaying apparatus, and the oscillation being quenched by a switching, or like operation, in order to restore the valve relay to its original condition of equilibrium.

The invention further consists in the relay circuits arranged and adapted to operate as hereinafter more particularly referred to.

In the accompanying drawings illustrating the invention diagrammatically and by way of example:—

Fig. 1 shows one form according to the invention,

Fig. 2 is a diagram showing the well known curve of the anode current as a function of the grid potential, and

Figs 3, 4, 5, 6, 7 and 8 are different modifications for carrying the invention into effect.

Referring to the drawings, V is a known form of vacuum valve arrangement comprising: a filament F heated by means of a battery B_f with which it forms a circuit hereinafter referred to as the filament circuit; a grid G connected to a battery B_g by which in the stationary condition its potential is maintained at any desired value with respect to the potential of the negative end of the filament, this circuit being hereinafter

referred to as the grid circuit; and an anode A connected to a battery B_a which tends to maintain the potential of the anode at a value above the potential of the negative end of the filament, this circuit being hereinafter referred to as the anode circuit. L_a is an inductance inserted in the anode circuit, and L_g an inductance inserted in the grid circuit, each of these inductances being shunted, by a condenser C_a and C_g respectively either or both of which condensers may be dispensed with.

It is well known that if the various parts of the circuits of the arrangement referred to are properly chosen or adjusted, the anode and grid circuits will re-act upon each other, for example, by mutual inductance between the two respective circuits, and cause the production of electric oscillation in the circuits of the inductances, the power being supplied by the battery included in the anode circuit.

If the potential of the grid is sufficiently low, no oscillation will be set up, and if the said potential is gradually raised a certain limiting value is reached for which there is no oscillation, and a relatively small anode current. Further rise of the potential of the grid beyond this point causes the system to set itself into oscillation, and provided suitable values are chosen, as hereinafter more particularly referred to, there is instability at the critical point, so that the amplitude of the oscillation assumes suddenly a finite value; that is to say, as soon as any oscillation occurs at all, it rises to a large amplitude. This is accompanied by a corresponding sudden rise in the mean anode current, and the oscillation is continued in spite of a fall of the mean grid potential below the critical value at which oscillation sets in. At this critical value the action of the device is very sudden in so far as a very small rise in the grid potential is sufficient to produce a change from the stationary to the oscillatory condition.

Referring to the well known curve (see Fig. 2) representing the anode current as a function of the grid potential, it will be seen that as the grid potential is increased from a low value, as by shifting the tapping point on the battery B_g towards the left, the slope of the curve increases. The system cannot generate any oscillation until the slope of the curve has reached a certain critical value depending upon the electrical dimensions of the circuits C_a, L_a and C_g, L_g, and their mutual inductance; however, when this critical value is reached, oscillation sets in, its amplitude being immediately built up to a finite value.

According to the present invention, the grid potential is adjusted so as to be just below the critical value. When the grid potential is adjusted to this value, and the valve is not oscillatory, by causing a week signal to raise momentarily or periodically the potential of the grid, e. g., by means of a suitable transformer T_p, T_s, the oscillation is started, being accompanied by a large change of mean anode current.

The sudden change of the mean anode current is used to operate a coarse relay CR, and the combination of this relay with the other circuits constituting the whole relay arrangement is made self-restoring, preferably by causing the displacement of the spring controlled tongue t of the coarse relay to stop oscillation, for instance, by short-circuiting the inductance and capacity L_a, C_a arranged in the anode circuit. Upon the cessation of the oscillation, the relay tongue t returns to its former position, the process being then repeated. The coarse relay CR, or another coarse relay, the magnets of which are connected in series or parallel with the magnets of the coarse relay CR, is arranged to control an indicating apparatus or a re-transmitting apparatus in the ordinary way.

The critical value of the grid potential is hereinafter referred to as the "threshold" and the cessation of oscillation as "quenching."

Let us assume the battery B_g to be adjusted just below the threshold, and the arrival of a signal in the primary T_p of the transformer momentarily to raise the potential above the threshold. After quenching, the system remains quiescent until a fresh signal again passes the threshold. It will thus be seen that the coarse relay will be operated by any signal arriving in the primary T_p of the transformer sufficiently strong to induce in the secondary T_s of the transformer an E. M. F. exceeding the difference between the threshold and the quiescent value of the grid potential.

Sometimes it may be desirable to provide a condenser shunt for the oscillatory currents between the filament F and the end of the inductance L_g remote from the grid G, and another condenser shunt between the filament and the end of the inductance L_a remote from the anode, and such an arrangement is illustrated in Figure 3 in which C^1, C^2 represent these two condensers respectively. It is however to be understood that although the addition of some capacity may sometimes be considered to be essential, the inherent self-capacities of the coils and other parts of the circuits may sometimes render unnecessary the addition of other capacities. It is also to be understood that either of the condensers C_a and C_g may be omitted as shown in some of the modifications illustrated in the accompanying drawings; and both may be omitted if the self-capacity of either of the circuits be sufficient alone.

A fine adjustment of the grid potential may conveniently be obtained by the use of a potentiometer P as illustrated for instance in Figure 3.

As the threshold depends upon the electrical dimensions of the circuits C_g, I_g, C_a, I_a and upon their mutual inductance, the same may be easily adjusted by adjusting the mutual inductance. The arrangement may be made to work with any threshold provided it is towards the lower end of the curve *a* (Fig. 2), so that at the threshold there is unstable equilibrium. However, in order to obtain the best results, it is desirable to arrange the threshold at a point where the slope of the curve *a* changes rapidly as the grid potential changes. The curve *b* in Figure 2 is drawn by making the ordinates represent rate of change of slope. Mathematically expressed, if v is the grid potential and i the anode current, curve *a* shows the relation between i and v, while curve *b* shows the relation between $\frac{d^2i}{dv^2}$ and v. It is desirable to have a threshold at which $\frac{d^2i}{dv^2}$ is large. To get the best results, therefore, the threshold should be brought to a value at or near the summit of curve *b*.

It is to be understood that the particular method of re-acting between the grid and the anode circuit shown in the various figures, is not the only method which may be used, as any other arrangement by which the system is rendered capable of generating oscillations may be employed instead.

Instead of the method of quenching hereinbefore referred to, use may be made of an independently operating switch for stopping the oscillation.

The quenching device employed must remain in action for sufficient time to allow the energy in the oscillatory circuits and the energy accumulated in the various other condensers and inductances to fall sufficiently to avoid automatic re-ignition of the oscillation when the quenching device ceases to be operative. For this reason when T_p, T_s is an iron-cored transformer adapted for signal currents of acoustic frequencies, it may be desirable to keep the inductance of the secondary T_s below the value which would otherwise be chosen on considerations of sensitiveness alone. For quenching purposes it may also be desirable to introduce means for increasing the rate of dissipation of the energies stored in the several parts of the circuits.

As the threshold depends to a certain extent on the current flowing through the filament, small variations of the potential difference of the filament battery may conveniently be compensated by the insertion of resistance R^1 in the filament circuit (see Fig. 4) between the negative end of the filament and the point at which the grid circuit joins the filament circuit. The most effective value of this resistance may be calculated by the methods published by me in a paper entitled "Wireless Call Devices", read before the Institution of Post Office Electrical Engineers, in February 1915. If the value of the resistance R^1 is suitably chosen, the change of filament current accompanying a small change of the potential difference of the filament battery B_f produces a change of potential drop in the resistance R^1 of such an amount that the grid potential still remains just below the threshold.

The change in the grid potential may be effected in various ways according to the particular form of signal that is received.

According to one arrangement, the valve relay may be operated by telephonic currents, for instance through the intermediary of a transformer T_p, T_s, (see Fig. 1), the secondary of which is inserted in the grid circuit, thereby causing the operation of the coarse relay CR through the anode circuit, the tongue *t* of the coarse relay being adapted to chatter as long as the signal continues, by rendering the whole of the device self-restoring as hereinbefore referred to, viz, by periodically short-circuiting the inductance arranged in the anode circuit during the reception of the signal. The secondary of the transformer and the winding of the coarse relay may be shunted by suitable condensers C_t and C_r respectively.

The oscillation set up may be made of any high frequency, such as millions, or by any small frequency, such as tens of periods per second, or any intermediate frequency, by suitably choosing or adjusting the various capacities and inductances, which latter may, or may not be provided with iron cores. The use of a high frequency is found to be convenient in so far as the oscillation requires no appreciable time to be set up by the signal or to be stopped by the self-restoring device, and further if the oscillation frequency be very high compared with the frequencies of the operating currents for which the transformer connected with the grid circuit is made suitable, any alterations which may be effected, or may take place, in the primary circuit of the said transformer will affect but little the adjustments within the arrangement described. It is also to be pointed out that if it is desired to obtain the highest degree of sensitiveness, the frequency of the oscillation should not be lower than the frequency of the incoming signal so that the duration of the trigger potential at the grid shall be sufficient for setting up the oscillation. When the operative signals are periodic, such as the high frequency currents in wireless telegraphy, it may be convenient

to arrange that the frequency of the oscillation and the frequency of the signal shall be the same. Further it is to be pointed out that if the signal recurs at some acoustical frequency, as for example in wireless telegraphy systems using spark transmitters, the sound produced in a telephone operated through the local contacts of the coarse relay, or directly by the mean anode current, will retain part of the acoustic character of the incoming signal, if the restoring device is arranged so that it shall operate with a frequency greatly exceeding the acoustic frequency of the transmitter.

In the case of incoming signals due to high frequency currents such as those used in wireless telegraphy, the high frequency currents may be applied directly to the grid without being previously rectified by the usual detector, this being effected either through a transformer whose secondary is inserted in the grid circuit or by magnetic induction on the inductance already referred to inserted in the latter circuit. Figure 5 illustrates an arrangement adapted for use in connection with wireless signals. 1, 2, is the aerial, T_p is the inductance inserted in the aerial and coupled with the inductance T_s, whilst 3 is a variable condenser inserted in the aerial circuit, and 4 another variable condenser by which the oscillatory circuit I_g, T_s, 4 is tuned to the aerial circuit and to the incoming signal.

In the various arrangements hereinbefore more particularly referred to with reference to Figures 1, 3, 4 and 5, the device is rendered operative by the induction in the secondary T_s of the transformer of an E. M. F. due to a change of current in the primary T_p thereof. The arrangement may however be adapted to be operated by steady or quasi-steady currents such as the signal currents received over a submarine telegraph cable, for instance by causing such current or a part thereof flowing through the primary T_p of the transformer to be repeatedly changed, such as by breaking the circuit of T_p by an independently operated switch. By making the time-constant of the circuit of T_p large, and the time during which the current in T_p is built up also large, sufficient energy to be operative can be accumulated in the transformer T_p, T_s by the action of an extremely feeble signal current.

Referring to the arrangement illustrated in Figure 6, 5 is a telegraph cable or other source of steady or slowly varying current; 6 and 7 are leads by which the current is conveyed from the said cable to the primary T_p of the transformer, this being effected through an interrupter 8 which is suitably maintained in motion so as periodically to interrupt the circuit through the primary T_p; 9 and 10 are fixed contacts adapted to co-operate with the moving contact 8 of the interrupter. When 8 and 9 are in contact with each other, the current from the cable 5 can flow through the primary T_p, and when they are opened this current rapidly falls to zero, whereby an E. M. F. is induced in the secondary T_s. By arranging that this current shall flow in the right direction, the induced E. M. F. may be caused momentarily to raise the potential of the grid, thereby setting the system into oscillation. A condenser 11 may be arranged across the contacts 8 and 9. Quenching may be effected in any of the manners hereinbefore referred to. According to one arrangement, the quenching is effected by short-circuiting the inductance I_s by means of the contacts 8 and 10. The movable contact 8 is caused to vibrate between the fixed contacts 9 and 10, thereby alternately exciting and quenching the oscillation as long as a current is received from the cable 5. The coarse relay CR may be made sluggish in action so that it shall not register the separate makes and brakes at the contacts 9 and 10, and shall only respond to the slower changes of the current received through the cable 5.

By making use of well known means it is possible to arrange that the rate of change of current in the primary T_p at make of contact between 8 and 9 shall be insufficient to operate the valve relay. In this case, if reversal of current in T_p and T_s following on the disturbance caused by the break between the contacts 8 and 9, is prevented or kept sufficiently small, the device will respond to currents from the cable 5 in one direction only. The reversal of current in the windings T_p and T_s of the transformers may be checked or wholly prevented by the provision of damping devices in a well known manner, for instance by means of resistance shunts 12 and 13 respectively.

It is sometimes desirable or necessary to insert one or more amplifying valves between the source of signals and the oscillatory valve of the relay. The necessary damping for preventing reversal of currents on interruption may then conveniently be introduced by raising the potential of the grid of the interposed amplifying valve. Such an arrangement is illustrated in Figure 7, in which V^1, is the amplifying valve. The current, the interruption of which is intended to operate the valve relay, passes through the primary T_p^1 of a transformer, the secondary T_s^1 of which is connected to the grid G^1 of the amplifying valve V^1 and to a potentiometer P^1 or equivalent apparatus controlling the potential of the grid. The primary T_p of the transformer associated with the second valve V is arranged in the anode circuit of the amplifying valve V^1. By raising the potential of the grid G^1 to a suitable value, the sud-

den break of current in T_p^1 can be prevented from causing reversal of E. M. F. in the secondary T_s^1.

The provision of an amplifying valve V^1 has the further advantage that it more or less completely prevents a sudden rise and fall of current in the secondary T_s from tending to throw currents into the cable or other apparatus connected to the primary T_p^1 of the transformer associated with the amplifying valve V^1.

Steady or relatively slowly varying E. M. F's frequently occur in long cables used in submarine telegraphy, which E. M. F's give rise to currents tending to distort or obliterate the signals; this phenomenon is sometimes referred to as the wandering or inconstancy of the zero of the signals. When such a phenomenon occurs, the E. M. F. induced in the secondary T_s corresponds to the breaking of a current in the primary T_p consisting of two components, viz, the signal current and the quasi-steady disturbing current, hereinafter referred to as the earth-current. In practice, it is found desirable to compensate for the earth-current. If i is the earth-current in the primary T_p, it produces in the secondary T_s an E. M. F. proportional to i, viz, $k\ i$. where k is a constant depending on the dimensions of the transformer T_p, T_s, and the rate at which the current falls when the contacts 8, 9 open. By arranging that the current i shall introduce another opposing E. M. F., $k\ i$ in the grid circuit I_g, T_s, B_g, without the signal current producing a corresponding opposing E. M. F., the effect of the earth-current can be nullified. In producing the compensating E. M. F. in the grid circuit any of the known devices and methods for discriminating between earth-currents and signal currents may be utilized, and Figure 8 illustrates by way of example, one arrangement whereby the earth-currents may be made to produce the desired compensating E. M. F.

Referring to Figure 8, r is a resistance of compact form inserted in the grid circuit and consisting of a fine wire of copper or other material having a large temperature coefficient of resistance and adapted to be strongly cooled by a cooling body 14 arranged in its proximity. The resistance r is arranged in series with another resistance r^1 and a battery B_r whereby the resistance r is maintained at an elevated temperature and a potential difference is produced across it which rises and falls as the temperature of r rises and falls. The cooling body 14, which may consist of a plate of aluminium or copper or other good heat conducting material, is provided with a large cooling surface for the rapid dissipation of heat and is attached to the moving system 15 of a sensitive galvanometer or equivalent apparatus, through the coil of which the earth-currents, or a part thereof, are caused to pass. In Figure 8 the usual condenser 16 shunted by the resistance 17 and inductance coil 18 of large time constant are shown, the current in 16 being made to flow through the galvanometer coil 15. Part of this current may if desired be shunted away from coil 15 by the resistance 19 which may possess inductance. The resistance r and the cooling body 14 are shaped and relatively arranged in such a manner that the temperature of the former is greatly affected by the motion of the latter. If the coil of the galvanometer carries any considerable portion of the signal currents, the galvanometer is made extremely sluggish in action, by known electrical or mechanical means or both, so that while the quasi-steady earth-currents are capable of producing an appreciable deflection of the galvanometer, the latter cannot follow the rapidly reversed signal currents. If an earth current i produces a rise of grid potential $+\ k\ i$, and if the galvanometer is arranged so that the same current causes the cooling body 14 to move away from the resistance r, the parts must be so dimensioned as to make the change of potential difference across r as nearly as possible equal in magnitude to $k\ i$, and the battery B_r must be connected in the sense shown on the drawing. In the case of a code being employed such as those associated with the names of Gott and Picard, in which the mean signal current is zero, signal currents in the galvanometer coil do not appreciably deflect the galvanometer. With other codes, however, such as the ordinary siphon recorder code, in which the means signal current would be zero only if the dots and dashes were equal in number, it is necessary in adjusting the grid potential to make allowance for the deflection of the cooling body 14 produced by the average signal current during the reception of the signals, and it is desirable to prevent as much as possible the signal currents from entering the galvanometer coil, for instance in the well known manner, by making its inductance as large as possible and by providing a shunt of small impedance with respect to the signal currents, or by any other suitable means.

The various methods of high frequency and acoustic frequency tuning may be used in connection with the various circuits employed in the arrangement hereinbefore described. Further, as the arrangement described is essentially a potential operated and not a power operated relay, the tuning may, under certain conditions, be carried to a finer pitch than is possible with most receivers where the power absorbed by the detector is far from being negligible.

The invention hereinbefore described may be used in connection with wireless, or ordinary telegraphy, and broadly speaking for any other purpose, and is not limited to any particular form of current. Further, any other source of current may be substituted for the various batteries inserted in the respective circuits, and the invention may otherwise be modified, and the details for carrying it into effect be varied without in any way departing from the spirit of the invention.

I also wish it to be understood that the invention is in no way dependent on the theory hereinbefore advanced for explaining the various phenomena involved in the operation of the device.

What I claim is:—

1. A valve relay capable of acting as a generator of oscillation, means whereby it may be adjusted to be in unstable equilibrium at the critical point at which oscillation sets in, and arranged to be set in oscillation by the action of a small electric current, thereupon continuing to oscillate irrespective of the continuance of the said operating current, and means controlled by the increase in the mean anode current for quenching the oscillations, said quenching means consisting of a circuit which is associated with the circuit in which the oscillation takes place and of a switch whereby the valve relay may be restored to its original condition of equilibrium, as set forth.

2. A valve relay capable of acting as a generator of oscillation, which is adjusted to be in unstable equilibrium at the critical point at which oscillation sets in, and arranged to be set in oscillation by the action of a small electric current, thereupon continuing to oscillate irrespective of the continuance of the said operating current, in combination with an apparatus less sensitive than the valve relay and arranged to be operated by the accompanying increase in the current of the valve, and with means for quenching the oscillation by a switching operation, whereby the valve relay is restored to its original condition of equilibrium, said quenching means consisting of a circuit capable of short-circuiting the oscillatory circuit under the control of the less sensitive apparatus, as set forth.

3. A valve relay capable of acting as a generator of oscillation, means whereby it may be adjusted to be in unstable equilibrium at the critical point at which oscillation sets in, and arranged to be set in oscillation by the action of a small electric current, thereupon continuing to oscillate irrespective of the continuance of the said operating current, in combination with an apparatus which is less sensitive than the valve relay and is arranged to be operated by the accompanying increase in the mean anode current, with means for quenching the oscillation whereby the valve relay is restored to its original condition of equilibrium, and with means for setting up the oscillation by the action of a small variation in current, as set forth.

4. A valve relay capable of acting as a generator of oscillation, which is adjusted to be in unstable equilibrium at the critical point at which oscillation sets in, and arranged to be set in oscillation by the action of a small electric current, thereupon continuing to oscillate irrespective of the continuance of the said operating current, in combination with an apparatus which is less sensitive than the valve relay and is arranged to be operated by the accompanying increase in the mean anode current, of the valve, with means for quenching the oscillation, said quenching means consisting of a circuit which is associated with the circuit in which the oscillation takes place and a switch, whereby the valve relay is restored to its original condition of equilibrium.

5. Apparatus for receiving and amplifying wave signals, and comprising in combination, means for producing oscillations and including an amplifying valve adapted to be "trigged", and automatically operating electrical means operative upon the oscillation circuit of the valve for quenching the oscillations as desired.

6. Apparatus for receiving and amplifying wave signals and comprising in combination, a feedback system, and means for periodically altering the relation between the amount of feedback and the degree of damping of the system.

7. Apparatus for receiving and amplifying wave signals and comprising in combination, a feedback circuit upon which the potential of said signals is adapted to be impressed, and means for periodically varying the amount of feedback in said circuit.

8. Apparatus for receiving and amplifying wave signals and comprising in combination, a feedback system, and means for periodically altering the relation between the amount of feedback and the degree of damping of the system, said means comprising an independently operating device shunted across one of the reactance elements of said system.

9. Apparatus for receiving and amplifying wave signals and comprising in combination, a feedback system adjusted near the point of oscillation; and means for periodically varying the amount of feedback with respect to the damping of said system.

10. The method of receiving and amplifying signals transmitted from a distance which comprises impressing varying potential representing the incoming signals to be amplified upon a feedback system, and periodically altering the relation between the amount of feedback and the degree of damping of the system.

11. The method of receiving and amplifying signals transmitted from a distance which comprises impressing varying potential representing the incoming signals to be amplified upon a feedback circuit, and periodically varying the amount of feedback.

12. The method of receiving and amplifying signals transmitted from a distance which comprises impressing varying potential representing the incoming signals to be amplified upon a feedback system adjusted near the point of oscillation; and simultaneously periodically varying the amount of feedback with respect to the damping.

13. Apparatus for receiving and amplifying signals transmitted from a distance and comprising in combination, a feedback system, receiving means for impressing upon said system varying potential representing the incoming signals to be amplified, and means for periodically altering the relation between the amount of feedback and the degree of damping of the system.

14. Apparatus for receiving and amplifying signals transmitted from a distance and comprising in combination, a feedback circuit upon which the potential of said signals is adapted to be impressed, receiving means for impressing upon said circuit varying potential representing the incoming signals to be amplified, and means for periodically varying the amount of feedback in said circuit.

15. Apparatus for receiving and amplifying signals transmitted from a distance and comprising in combination, a feedback system adjusted near the point of oscillation, receiving means for impressing upon said system varying potential representing the incoming signals to be amplified, and means for periodically varying the amount of feedback with respect to the damping of the system.

16. Apparatus for receiving and amplifying signals transmitted from a distance and comprising in combination, a feedback system, receiving means for impressing upon said system varying potential representing the incoming signals to be amplified, means for periodically altering the relation between the amount of feedback and the degree of damping of the system, and signal-indicating means controlled by the current in the output circuit of said feedback system.

17. Apparatus for receiving and amplifying signals transmitted from a distance and comprising in combination, a feedback circuit upon which the potential of said signals is adapted to be impressed, receiving means for impressing upon said circuit varying potential representing the incoming signals to be amplified, means for periodically varying the amount of feedback in said circuit, and signal-indicating means controlled by the current in the output circuit of said feedback circuit.

18. Apparatus for receiving and amplifying signals transmitted from a distance and comprising in combination, a feedback system adjusted near the point of oscillation, receiving means for impressing upon said system varying potential representing the incoming signals to be amplified, means for periodically varying the amount of feedback with respect to the damping of the system, and signal-indicating means controlled by the current in the output circuit of said feedback system.

In testimony whereof I have signed my name to this specification.

LAURENCE BEDDOME TURNER.