April 2, 1946. F. D. NITTERAUER 2,397,881

SIGNALING SYSTEM

Filed Sept. 26, 1944 7 Sheets-Sheet 1

FIG. 8

FIG. 1	FIG. 5	FIG. 6
FIG. 2	FIG. 3	FIG. 4
FIG. 7		

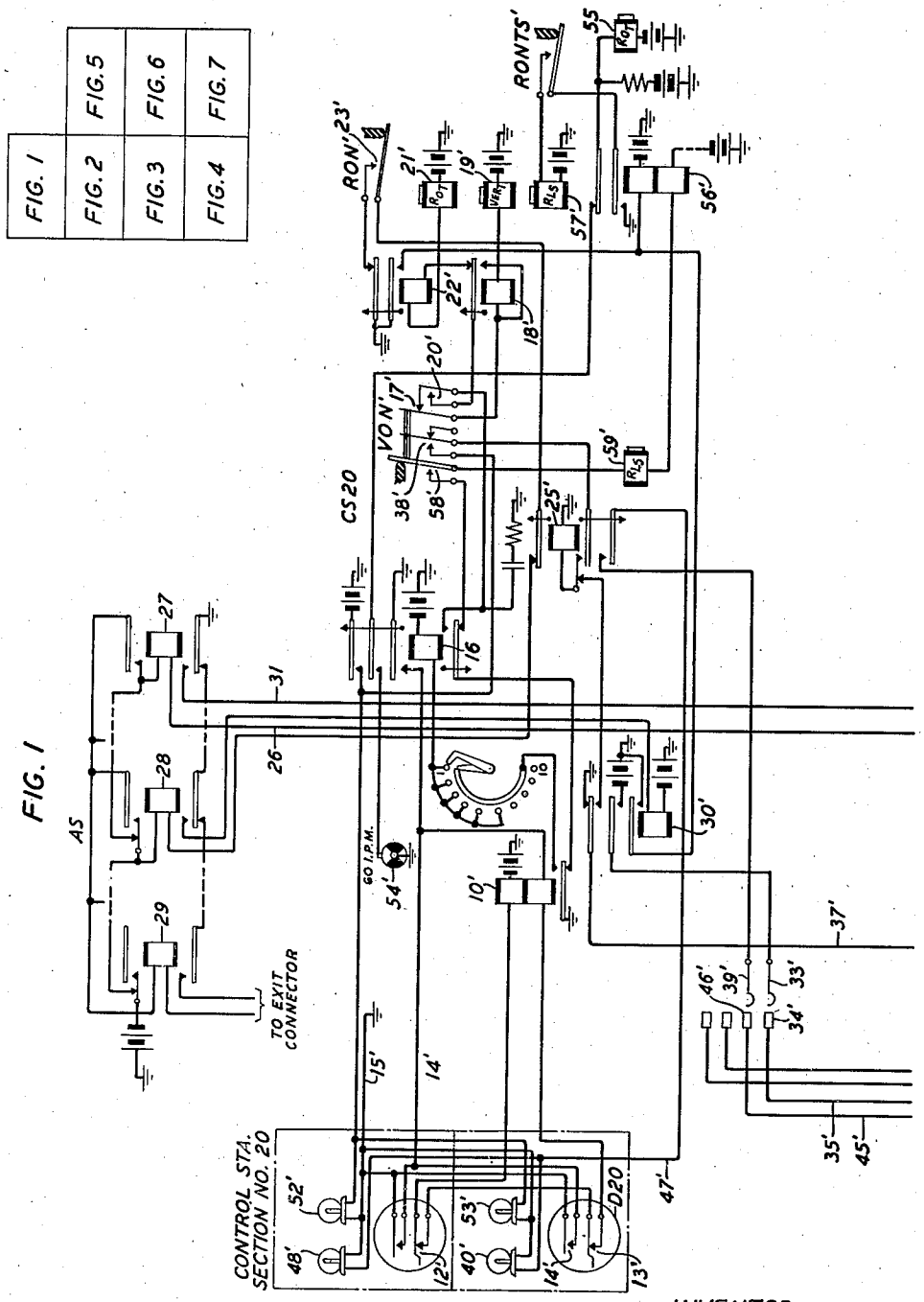

INVENTOR
F. D. NITTERAUER
BY William R Ballard
ATTORNEY

April 2, 1946. F. D. NITTERAUER 2,397,881

SIGNALING SYSTEM

Filed Sept. 26, 1944 7 Sheets-Sheet 2

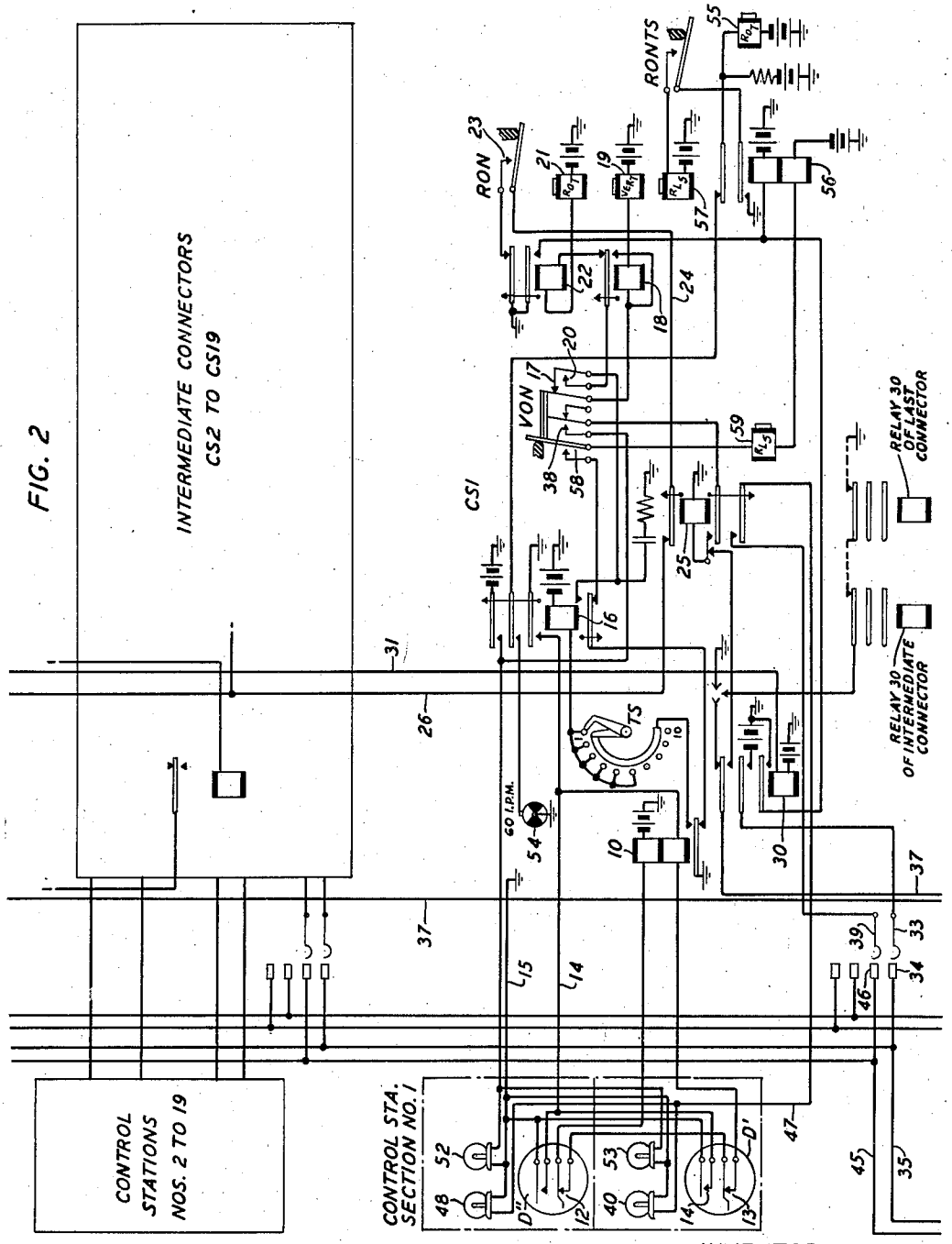

FIG. 2

INVENTOR
F.D. NITTERAUER
BY William R Ballard
ATTORNEY

April 2, 1946. F. D. NITTERAUER 2,397,881

SIGNALING SYSTEM

Filed Sept. 26, 1944 7 Sheets-Sheet 3

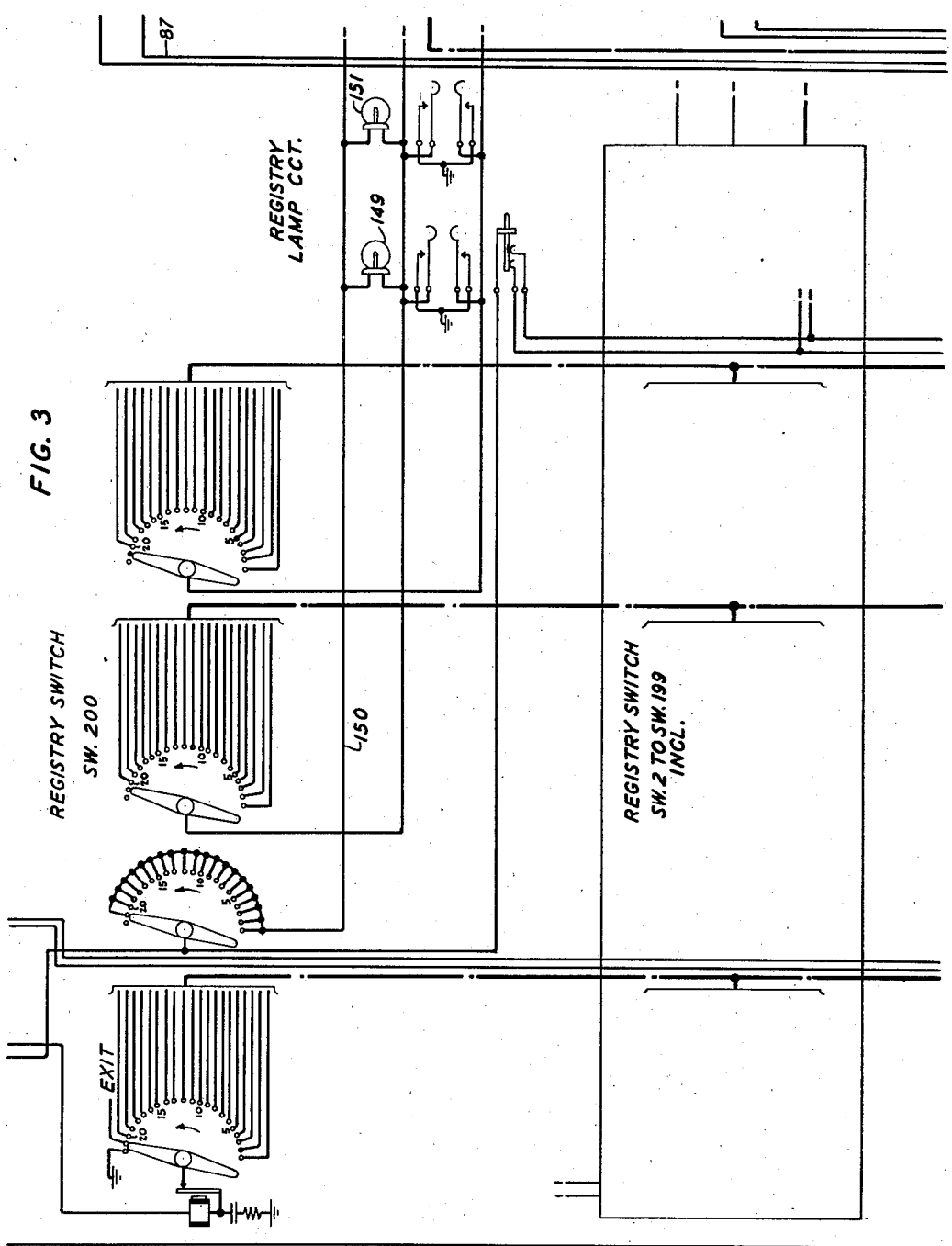

FIG. 3

INVENTOR
F. D. NITTERAUER
BY William R. Baccard
ATTORNEY

April 2, 1946 F. D. NITTERAUER 2,397,881

SIGNALING SYSTEM

Filed Sept. 26, 1944 7 Sheets-Sheet 4

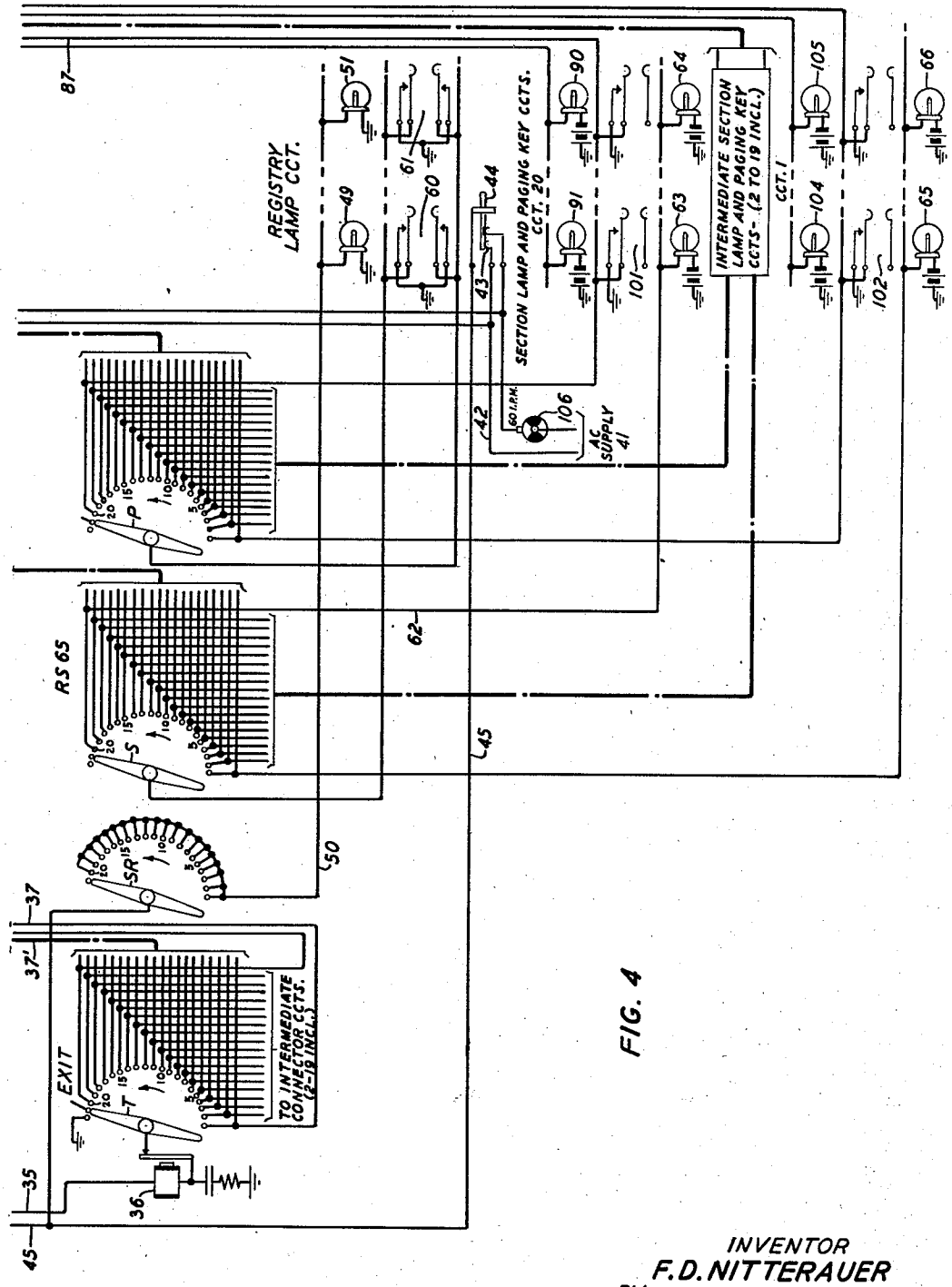

FIG. 4

INVENTOR
F. D. NITTERAUER
BY William R. Ballard
ATTORNEY

April 2, 1946. F. D. NITTERAUER 2,397,881

SIGNALING SYSTEM

Filed Sept. 26, 1944 7 Sheets-Sheet 5

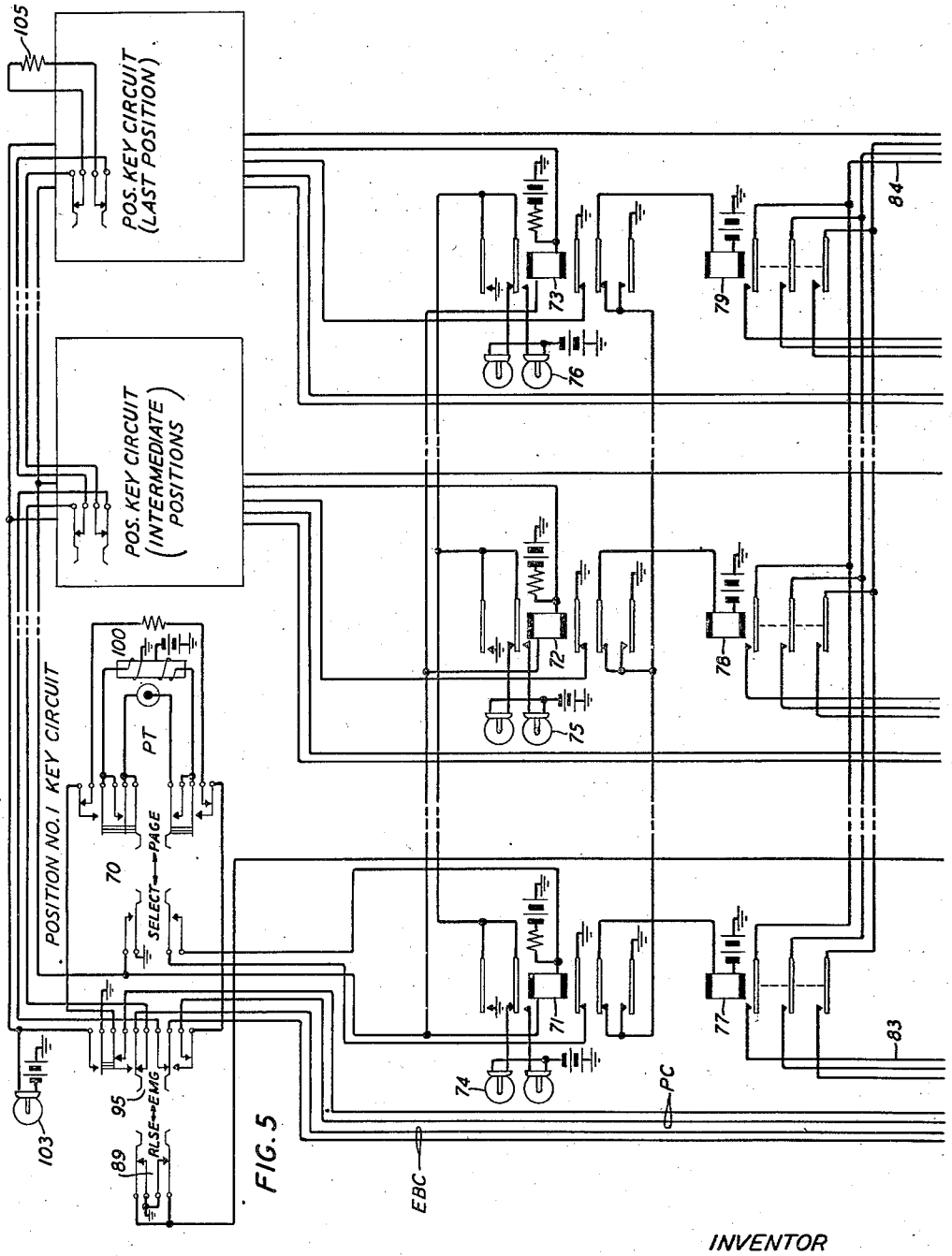

FIG. 5

INVENTOR
F. D. NITTERAUER
BY William R. Ballard
ATTORNEY

April 2, 1946. F. D. NITTERAUER 2,397,881

SIGNALING SYSTEM

Filed Sept. 26, 1944 7 Sheets-Sheet 6

FIG. 6

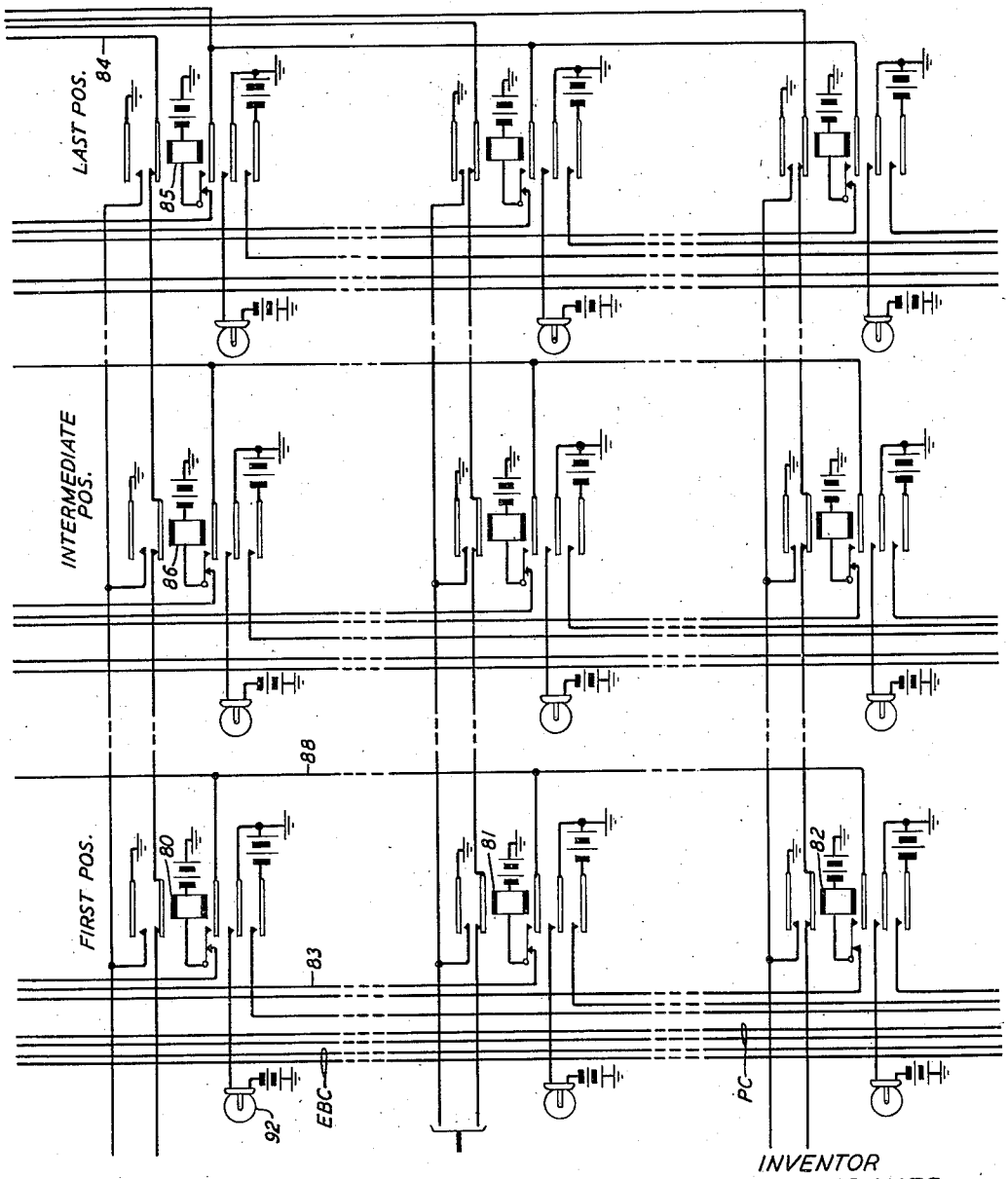

INVENTOR
F.D. NITTERAUER
BY William R. Ricard
ATTORNEY

April 2, 1946. F. D. NITTERAUER 2,397,881

SIGNALING SYSTEM

Filed Sept. 26, 1944 7 Sheets-Sheet 7

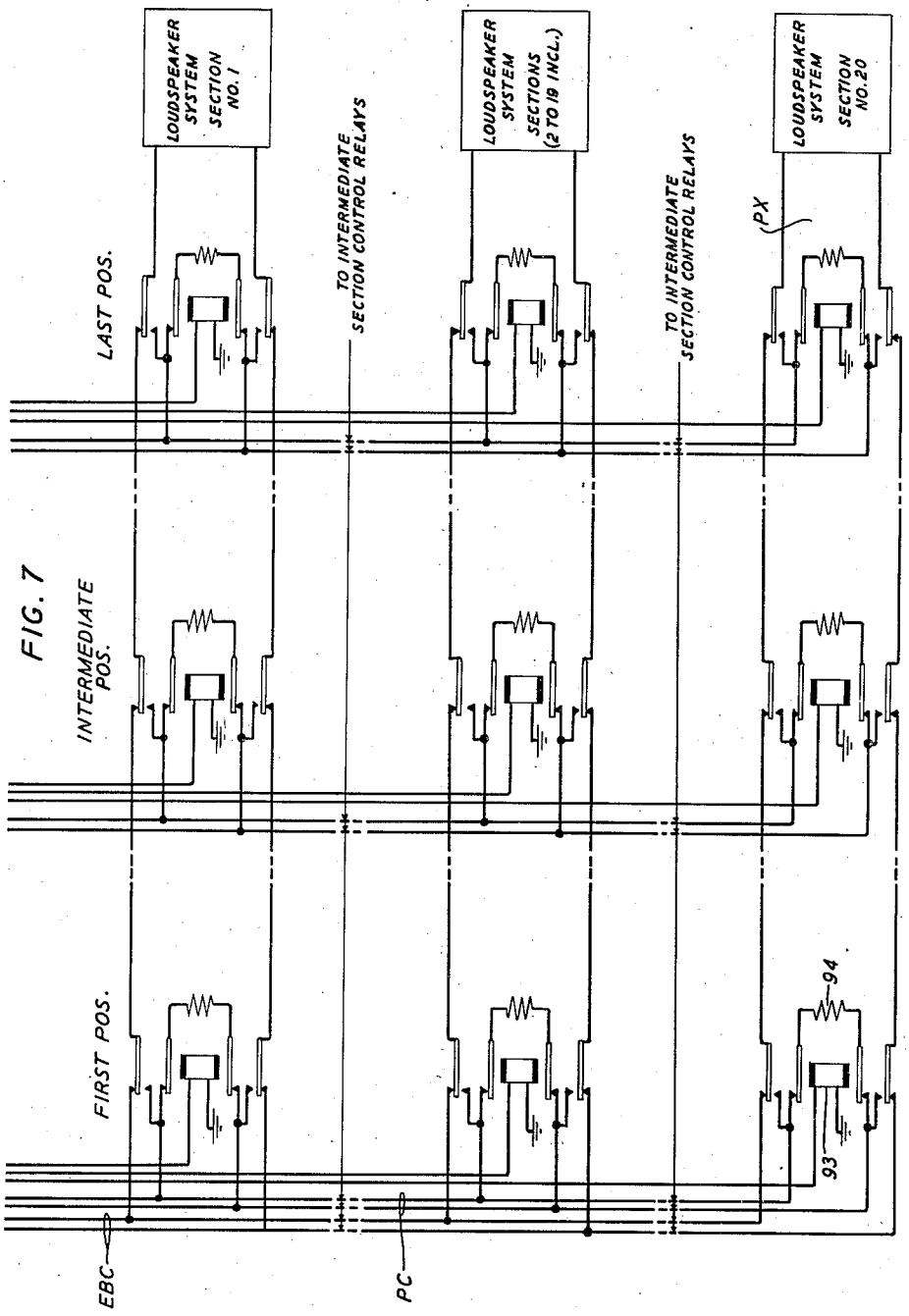

FIG. 7

INVENTOR
F.D. NITTERAUER
BY William R. Ballard
ATTORNEY

Patented Apr. 2, 1946

2,397,881

UNITED STATES PATENT OFFICE

2,397,881

SIGNALING SYSTEM

Franklin David Nitterauer, Minneapolis, Minn., assignor to American Telephone and Telegraph Company, a corporation of New York

Application September 26, 1944, Serial No. 555,799

20 Claims. (Cl. 179—2)

This invention relates to a combined registry and paging system of the type which is particularly suitable for use in large hospitals and similar institutions, as well as in large business establishments.

It is the object of the invention to provide an improved combined registry and paging system which furnishes complete coverage of a building, in which the system is installed, for paging purposes; which provides registry facilities for a substantially unlimited number of individuals having roving assignments in such a building; and which simplifies the necessary controls and reduces to a minimum the signaling, or indicating apparatus required in identifying and locating the various individuals covered by the system.

In accordance with a particular feature of the invention some of the normal telephone facilities with which a hospital or other large building is provided are coordinated with those of the registry and paging systems. More particularly, the usual private branch exchange switchboard is utilized as a central control and observation point from which all paging functions are performed under control of the private branch exchange operators, or attendants, and at which all signaling equipments, which identify the various individuals covered by the system and which serve to identify the locations of such individuals at any particular time are located. To this end, each individual covered by the system is provided with a signal lamp located at the exchange with multiple appearances at each of the operators' positions. The lighted condition of such lamps serves to indicate to the operators that the corresponding individuals are on the premises and have placed themselves on call. Also located at the exchange, with multiple appearances at the various operators' positions, is a series of section lamp signals each one of which identifies a particular section, floor, or zone into which the premises covered by the system are divided, and each one of which, when lighted incident to an act performed by an operator in attempting to locate a particular individual identifies the sought individual with the corresponding section, floor, or zone.

Another feature of the invention contemplates the use of a registry switch per individual, or registrant, which functions, under control of pulsing devices, such as telephone dials, located at each of the various floors, sections, or zones into which the covered building is divided, to store information as to the whereabouts of the particular individual while in the building. The information thus stored is available to the several operators to employ at will, or as conditions require.

A further feature of the invention resides in operator-controlled means for automatically connecting a paging transmitter to the loud-speaker paging system individual to the section, floor, or zone in which a registration to be paged is located, for localized, low-level, loud-speaker paging. This feature avoids disturbing the entire building to reach an individual registrant who is moving about the building. It also simplifies the reaching of such individual in that it eliminates the necessity for the operator to first determine the location of the sought individual and to thereafter perform the paging function. The sought individual is automatically located in the section, zone, or floor to which he has advanced and the loud-speaking system of the said section, zone, or floor is automatically associated with the operator's paging transmitter.

Still another feature of the invention provides for broadcast paging throughout the entire building in emergencies.

A still further feature of the invention provides for silently signaling any registrant at the conclusion of his next registration by means of a flashing lamp at the dial section from which he registers, when a delayed call or message is being held for him by the private branch exchange operator.

Still another feature of the invention provides an automatic switch per section, zone, or floor which functions in such a manner, in response to the actuation of the dial at a dial station, as to obviate the need for any auxiliary switch or mechanism which normally recognizes the removal of the telephone set or receiver from its support. In other words, a registrant in registering his location in the building need only actuate the dial in accordance with the digits of his identification number and is not required to perform any operation which simulates switchhook contact operations normally required in the initiation of a call from a dial station.

These and other features of the invention will be readily understood from the following description when read in connection with the accompanying drawings, the Figures 1 to 7 of which, when arranged in accordance with the block diagram of Fig. 8, cooperate to illustrate a complete combined registry and paging system embodying the features of the invention.

The system disclosed in the drawing is by way of illustration only, since it will be apparent that

the capacity of the system is substantially unlimited. For the sake of simplification, the disclosed system is described as one which is suitable for use in covering twenty sections, floors, or zones of a building and in providing registration facilities for one hundred individuals.

In Fig. 1 there is diagrammatically illustrated, in detail, a connector switch CS20 which is individual to section No. 20 of the building covered by the system. To the left of the connector is indicated the No. 20 section dial circuit or control station, from which the connector CS20 is controlled. The section dial circuit, one of which is individual to each section, consists of one or more serially related telephone dials of standard well-known type. The dials are of the wall-mounted type and are conveniently located in readily accessible points in the section. With each dial there are associated two signal lamps one of which is a registry lamp and the other a busy lamp. The busy lamps, when lighted, function to indicate the busy condition of the section connector, and the registry lamp, when lighted, serves to inform a registrant employing the dial that the connector has functioned to transmit the registration information to the registrant's particular registry switch. At the top of Fig. 1 is shown a relay allotter circuit which is common to all twenty section connector switches.

At the bottom of Fig. 2 is shown a duplication of the section dial circuit and connector switch shown in Fig. 1. This equipment is intended to illustrate such equipment as is individual to section No. 1 of the building. The upper portion of Fig. 1 shows, in block form, corresponding equipment allocated to sections Nos. 2 to 19, inclusive, of the building.

Fig. 3 shows two registrants' registry switches, one in detail and the other schematically, and also the signals and control equipment located at the exchange and individually corresponding to the registry switch shown at the top of Fig. 3.

The upper portion of Fig. 4 shows, in detail, a registrant's registry switch RS65, which, for descriptive purposes is assumed to be individually assigned to the individual doctor, nurse, clinician, or other personnel member, if the building covered is a hospital, whose identification or registry number is "65." The wiring of this switch illustrates the manner in which certain contact arcs are multipled to corresponding arcs of other registry switches, and also how other arc contacts extend to the various lamp signals and control keys located at the private branch exchange. The right central and lower portions of Fig. 4 illustrate a portion of the switchboard equipment. In this partial showing, the lamps 49 and 51, located at each of two switchboard positions are allocated to one particular registrant, such as registrant No. 65. If, as assumed, the illustrated system accommodates but one hundred registrants, there would be one hundred such lamps located at each operator's position. Since the lead 50 over which the lamps 49 and 51 are controlled is shown connected to registry switch RS65, it follows that these lamps identify registrant No. 65 to whom the switch RS65 is individual. Corresponding lamps 149 and 151 of Fig. 3 are identified with the registry switch shown at the top of the figure, being associated therewith by the conductor 150. The lamps 149 and 151 would therefore identify the individual to whom that particular registry switch is assigned. Just below the lamps 49 and 51 are shown the keys 60 and 61, respectively. One such key is provided for each lamp such as 49 and 51. Similar keys are illustrated in Fig. 3.

At the first switchboard position there are located one key 44 per registrant, that is, one such key for each registrant's lamp, such as 49. A similar key is shown in Fig. 3, corresponding to the registrant's lamp 149.

The lamps 91 and 90 of Fig. 4, one of which is provided for each section at each switchboard position, are page busy lamps. These lamps are, in the drawings, particularly identified with section No. 20 of the building, whereas corresponding lamps 104 and 105 are particularly identified with section No. 1. Obviously, in a twenty-section building there will be twenty such lamps at each operator's position. Each such lamp is associated with a corresponding page key, such as shown at 101 and 102, for example.

The lamps 63 and 64, also 65 and 66, are section lamps. The lamps 63 and 64, one each of which is located at an operator's position, identify section No. 20, whereas lamps 65 and 66 serve in the same capacity with respect to section No. 1. Obviously, there will be twenty such section lamps at each operator's position.

Figs. 5, 6 and 7 when placed one below the other in that order, constitute a diagrammatic representation of the position key circuit located at each operator's position, and the group selecting paging equipment associated therewith. By virtue of the relay arrangement shown in Figs. 6 and 7 and in the lower portion of Fig. 5, each operator has automatic access to twenty section loud-speaker systems, three of which are shown schematically at the right of Fig. 7. It is to be understood that each cut through relay such as relays 77, 78 and 79 (one per position) controls twenty page control relays, only three of which, 80, 81 and 82 are illustrated. Similarly, each of the twenty page control relays, such as 80, 81 and 82, one per position, control a section control relay such, for example, as relay 93.

This brief description of the figures when coupled with the following detailed description of the operation of the system will afford a comprehensive understanding of the invention. The detailed description is confined particularly to the operation of the system in so far as one particular registrant, No. 65, is concerned, and in its operation when such registrant registers from sections Nos. 1 and 20 of the building.

Registration

When a registrant, such as a doctor, clinician, or other key personnel member enters the hospital he, or she, to whom a particular identification has been assigned, will, in accordance with hospital regulations, proceed to a convenient control or dial station and dial his, or her assigned identification or registry number. Such entrance dial stations would be located usually in the hospital lobby or other convenient locations to which such individuals would normally go upon arriving at the hospital.

It will be assumed that the registrant has been assigned the number "65" and that the dial D' at section No. 1 is employed for registration purposes, this dial being one of two illustrated at the lower left corner of Fig. 2 which are located in the hospital lobby, or at some convenient place near the entrance.

When the section dial D' is moved off normal, connector relay 10 operates in a circuit extending from grounded battery, upper winding of re-

lay 10, normally closed dialing contacts 12 of dial D'', normally closed dialing contacts 13 of dial D', lower winding of relay 19, conductor 14, off-normal contacts 14 of dial D', conductor 15 to ground. Relay 16, which is slow-to-release, now operates in a circuit extending from grounded battery, winding of relay 16, strapped terminals of timing switch TS, front contact and armature of relay 10 to ground.

When the section dial is released, the pulsing contacts 13 of the dial D' are alternately opened and closed in accordance with the first digit "6" of the identification number "65" assigned to the dialing registrant. Relay 10 follows these interruptions, releasing and operating six times. Relay 16, being slow-to-release, remains operated during these repeated operations of relay 10.

Each time relay 10 releases, ground at its back contact is extended to battery and ground by way of the lower armature and front contact of relay 16, contacts 17 of the vertical off-normal switch VON, winding of slow-to-release relay 18 and the winding of vertical magnet 19. Magnet 19 operates in a well-known manner to cause the connector switch CS1 to rise one step each time relay 10 releases. Relay 18 also operates in the circuit traced and maintains the pulsing circuit through its armature and front contact and contacts 20 of vertical off-normal switch VON after the contacts 17 thereof were opened at the first vertical movement of the switch shaft. Thus, in response to the dialing of the first digit "6" the connector switch CS1 is raised so that its wipers 33 and 39 are located opposite the sixth level of contacts.

At the end of the first series of impulses, slow-to-release relay 18 releases to transfer the pulsing circuit to the rotary magnet 21 through the winding of slow-to-release relay 22. In response to the second series of five pulses transmitted by the dial D' the rotary magnet 21 rotates the connector switch shaft five steps at which time the switch wipers will be in engagement with the terminals 34 and 46 which correspond to the registry switch RS65 which is individually allocated to the registrant whose identification number is "65." Relay 22 operates in the pulsing circuit and remains operated during the rotary pulses.

When the rotary pulses cease, relay 22 releases and at its outer armature and back contact extends ground over the contacts 23 of rotary off-normal switch RON, conductor 24, upper armature and back contact of relay 25, to the allotter start lead 26, winding of relay 27 individual to the first connector served by the relay allotter, to battery and ground by way of the upper normally closed back contacts of all other allotter relays, such as relays 28 and 29. Relay 27 operates in this circuit and locks. At its lower armature, relay 27 connects ground to the lead 31 to cause relay 30 of the connector CS1 to operate in an obvious circuit. It will be observed that with relay 27 of the allotter circuit operated no other connector relay other than relay 30 can be operated since the operating circuits for such other relays is opened at the back contact and lower armature of relay 27.

Relay 30, operated, connects battery by way of its middle armature and front contact to the connector brush 33, and thence over the connector terminal 34 upon which the brush 33 is now resting, conductor 35, winding of stepping magnet 36 and its interrupter contact, brush T of the registry switch RS65 and its corresponding No. 1 terminal (assuming switch RS65 is already resting on terminal No. 1), conductor 37, to the uppermost armature of relay 30. It will be observed that all terminals of the arc of switch RS65 associated with the brush T are directly grounded except the No. 1 terminal since the direct ground has been removed from this terminal by the operation of relay 30 in the connector CS1. Stepping magnet 36 accordingly operates to step the switch RS65 around until the wiper T thereof engages the No. 1 terminal from which direct ground has been removed. With relay 30 operated and when the switch wiper T engages the No. 1 terminal, ground through the winding of relay 25 is substituted for the direct ground at the uppermost back contact of relay 30 so that relay 25 operates to battery at the middle front contact of relay 30 over the circuit previously traced. The winding of stepping magnet 36 is included in this circuit but this magnet does not operate in series with relay 25 due to the resistance of the winding of this latter relay. The registry switch RS65 accordingly comes to rest on its No. 1 terminal.

Relay 25, operated, locks in a circuit extending from battery, outermost upper armature of relay 16, contacts 38 of vertical off-normal switch VON, inner lower armature and front contact of relay 25 and its winding to ground. At its upper armature relay 25 opens the allotter lead 26, and at its outer lower armature it closes the lead from connector brush 39 through to the dial section lamp 40 by way of conductor 47. With the allotter lead 26 opened incident to the operation of relay 25, allotter relay 27 is released causing the release of connector relay 30. Thus some other connector relay, 30, 30' is permitted to operate if a registration by way of such other connector has been initiated.

The dial section lamp 40 is now lighted in a circuit extending from the alternating current supply 41 (Fig. 4), conductor 42, contacts 43 of the key 44, conductor 45, connector terminal 46 and brush 39, front contact and outermost lower armature of relay 25, conductor 47, filaments of lamps 40 and 48 in parallel, conductor 15, to ground. Both lamps 40 and 48 are lighted in this circuit, the former indicating to the registrant that his presence in the building has been registered at the attendant's display board since registry lamp 49, individual to the registrant "65" is lighted also from the source 41, over conductor 42, contacts 43 of the key 44, conductor 45, brush SR and corresponding terminal No. 1 of registry switch RS65, conductor 50, to ground through the filament of lamp 49. Lamp 51, located at another position of the switchboard is lighted in parallel with lamp 49. It will be observed that the arc terminals of switch RS65 associated with the brush SR are strapped together so that no matter what position the switch takes, the lamps 49 and 51 and any other corresponding lamps located at other attendants' positions will remain lighted until the registrant leaves the hospital, as will appear more fully from a later description.

It will be observed also that when the connector relay 16 operated, it completed an obvious circuit for the energization of the busy lamps 52 and 53 of the section dial circuit to indicate the busy condition thereof and to thereby guard against the use of dial D'' by another registrant while the dial D' of the same section is in use.

Relay 30, which released when relay 25 operated, makes the relay allotter AS available for use by other section switches and regrounds the

lead 37 extending to the No. 1 contact of the bank terminals of switch RS65 associated with the brush T to prevent other registry switches from stopping on its corresponding terminal.

The lighting of lamps 49 and 51 serves to inform the operators at the corresponding switchboard positions that the party to whom the designation number "65" is assigned has registered in, and is available for paging if conditions warrant it.

Timing

The length of time a registrant, such as registrant No. 65, may hold up a section switch, such as the connector CS1, is limited to several seconds and may be varied by the strapping of the contacts of the timing switch TS. As long as relay 16 is operated, interrupted ground, by way of interrupter 54, is connected to the stepping magnet 55 for the timing switch TS by way of the front contact and third upper armature of relay 16 and the back contact and outer armature of relay 56. Thus the timing switch is caused to step once per second, the interrupter 54 functioning at 60 interruptions per minute, towards the unstrapped contacts of the timing switch TS. If the various subsequent registration operations, just described, are not accomplished in the allotted time, the timing switch upon leaving the last strapped contact will open the circuit to relay 16 to release the switch CS1. Normal timing on a registration begins with the first off-normal movement of the dial and continues until the beginning of the pulses of the last (rotary) digit which operate relay 22 as previously described.

With relay 22 operated as previously described, ground is connected to battery through the upper winding of relay 56 to cause this relay to operate. Relay 56, operated, opens the operating circuit of the timing switch stepping magnet 55, and, at its inner armature, completes an operating circuit for the timing switch release magnet 57 by way of the rotary off-normal contacts RONTS of the timing switch. The release magnet 57 functions in the well-known manner to return the timing switch to normal. Relays 22 and 56 release after the completion of rotary pulsing and timing begins again.

When the connector switch CS1 is seized by the allotter AS as described, relay 30 operates, and, at its front contact and innermost armature, completes an obvious operating circuit for relay 56 causing this relay to function to again release the timing switch. After a short interval, relay 30 releases, releasing relay 56 and the last period of timing begins. This period is long enough to maintain the lamps 40 and 48 at the section dials for a short interval before the switch is released.

Restoration of section connector

When relay 16 is released by the timing switch reaching an unstrapped contact, ground is disconnected from the lower winding of relay 10 causing this relay to release. Relay 10, released, completes a circuit which may be traced from ground, armature and back contact of relay 10, lower armature and back contact of relay 16, contacts 58 of vertical off-normal switch VON, winding of release magnet 59, lower winding of relay 56 to release battery and ground. Relay 56 and release magnet 59 operate in this circuit and return the switch and all operated relays to normal.

Registration from another section

In order to provide a more comprehensive understanding of the operation of the system disclosed in the drawings, the following description is directed to the registration by the same registrant, whose identification number is "65," from another section. It will be assumed that the registrant has entered section No. 20 and employs the dial D20 for the purpose of registering his location. It is immaterial whether the registrant has registered previously from some intermediate section or goes directly from the entrance section to section No. 20. To simplify the description, the elements of the section connector switch CS20 and the corresponding dial circuit are given the same identification characters as corresponding elements of the switch CS1 with a prime characteristic added. It is deemed unnecessary to describe in detail the various switching functions of the connector CS20 since they are identical to those of connector CS1, previously described.

When the registrant actuates the dial D20 in accordance with the digits of his identification number "65," the connector CS20 functions in a manner now clearly understood to effect the seizure of the particular registrant's registry switch RS65 by causing the brushes 39' and 33' to engage the terminals 46' and 34', respectively. It will be observed that all the section terminals of the arc associated with the brush T of registry switch RS65 have direct ground applied thereto by virtue of the fact that all connector relays, such as 30 of the other connectors are in their normal positions. However, contact No. 20 thereof, which is individual to the connector CS20 and is connected thereto by the conductor 37', will be grounded through the winding of relay 25' since relay 30' of the switch CS20 is now operated. Thus, when the brush 33' engages terminal 34' a circuit is completed extending from grounded battery, front contact and middle armature of relay 30', connector brush 33' and the terminal 34', conductor 35', conductor 35, winding of stepping magnet 36 and its interrupter contact and brush T of the registry switch RS65 which is resting upon the No. 1 contact due to the previous registration of registrant No. 65 from the first section. Since this contact is now grounded by the unoperated condition of relay 30 of connector switch CS1 the circuit for the stepping magnet 36 is completed and the magnet functions to step the brush and all other brushes of the registry switch RS65 to the next, or second contact. Since all contacts but the No. 20 contact of the arc associated with brush T are similarly grounded, the brush T, under the action of stepping magnet 36 is advanced step-by-step over all such contacts until the No. 20 contact is reached and, finding no direct ground on this terminal, the switch RS65 comes to rest.

It will be noted that lamps 49 and 51, individual to registrant No. 65, are maintained lighted at the switchboard over the strapped contacts of the switch arc associated with the brush SR. Also that the circuit for lamps 48' and 40' at the section dial circuit No. 20 is completed from the source 41 when relay 25' operated incident to the operation of relay 30', so that the lamps 48' and 40' serve the same purpose in the No. 20 section dial circuit as did lamps 48 and 40 of the No. 1 section dial circuit. For illustrative purposes only, the allotter relay 28 is indicated as being individual to the connector CS20, so that this relay, incident to the registration of a number

from section No. 20 will perform functions similar to those performed by relay 27 incident to the registration from section No. 1.

The timing and restoration features of the connector CS20 are identical to those of connector CS1 previously described.

Locating registrant

It will now be assumed that subsequent to the registration of the registrant No. 65 from section No. 20 it becomes necessary for an operator to locate such registrant. To this end, the operator seeking to locate the registrant actuates the key at her position which corresponds to the lighted lamp 49, for example, which is individually assigned to the registrant whose identification number is "65." Accordingly, the key 60 is actuated since this key corresponds to the lamp 49. If the operator at the next position was seeking to locate registrant No. 65, she would actuate key 61 since this key corresponds to the lighted lamp 51 which identifies registrant No. 65 at her position.

When the key 60 is actuated, ground is connected to the brush S of the registry switch RS65 which is now standing on the No. 20 contact, having advanced thereto under the action of stepping magnet 36 when the registrant last registered from section No. 20. This ground is extended over conductor 62 to battery through the filaments of section lamps 63 and 64 located at each operator's position, respectively, at the switchboard. The lamps 63 and 64 identify section No. 20 of the hospital, and their illumination, following the actuation of a key such as key 60, or key 61 individually corresponding to the lighted lamps 49, or 51 which identify the particular registrant No. 65, informs the operator that registrant No. 65 has last registered from section No. 20 and may be located in that section.

Had it been necessary for an operator to locate registrant No. 65 at a time when the registrant had last registered in section No. 1, the operation of key 60, for example, would have resulted in the lighting of lamps 65 and 66 at the two operators' positions, which lamps identify section No. 1, and their illumination would indicate to the operator that registrant No. 65 had last registered from section No. 1. The display keys, such as 60 and 61 are non-locking and the section lamps are extinguished when the keys are released.

Loud-speaker paging—automatic selection

When a registrant must be reached immediately, an operator at position No. 1, for example (Fig. 5), would first operate key 70 to the left, or "select" position and thereafter operate a display key corresponding to the registrant who is to be paged. In the present case the display key would be the key 60 which corresponds to the registrant No. 65. When key 70 (Fig. 5) is actuated to the "select" position, energizing circuits for relays 72 and 73 are prepared to ground at the upper contacts of key 70. Relay 71 is individual to position No. 1; relay 72 to position No. 2 or some other intermediate position; and relay 73 to the last position. Relays 72 and 73 at the positions other than the position at which the selection is being made operate but relay 71, at the position at which the selection is made, does not operate due to the fact that its winding is shunted by the ground at its innermost lower armature and back contact. With relays 72 and 73 operated, and relay 71 unoperated, the guard lamp 74 at the position making the selection is lighted in a circuit which includes the back contact and inner upper armature of relay 71 and the outer upper armatures and front contacts of relays 72 and 73. At the other positions the busy signal lamps 75 and 76 are lighted over obvious circuits.

Relay 77 now operates in a circuit extending from grounded battery, winding of relay 77, middle armature and back contact of relay 71 (unoperated) and the front contacts and outermost lower armatures of the operated position relays 72 and 73. It will be noted that only one relay 77, 78 or 79 can be operated at a time. Relay 77, operated, prepares an operating circuit for each of the page control relays 80, 81 and 82 associated with the paging channel PC of the selecting position.

When the operator at position No. 1, for example, now operates the display key 60 associated with the lighted registry lamp corresponding to the registrant No. 65 who is to be paged, a particular page control relay 80, 81, 82, etc., associated with her position paging channel PC operates. In this case, page control relay 80 operates in a circuit which may be traced from grounded battery, winding and normally closed make-before-break contacts of relay 80, conductor 83, front contact and innermost armature of relay 77, conductor 84, inner upper armatures and back contacts of relays 85, 86 and 80 in series, conductor 87, the No. 20 contact of the arc of switch RS65 associated with the brush P, brush P, to ground at the lower contacts of the operated display key 60. The chain arrangement of relays 85, 86 and 80 prevents double connections by the operators.

Relay 80, operated, locks to ground at the contacts of release key 89 by way of conductor 88. At its outer upper armature, relay 80 establishes an obvious energizing circuit for the section busy page lamps 90 and 91 which lamps, when lighted, indicate to all operators that the section to which these lamps correspond is now being used for paging. At its middle lower armature and front contact relay 80 completes an obvious circuit for lamp 92 which lights to indicate to the "selecting" operator that her individual paging channel is connected to section No. 20. At its outermost lower armature and front contact, relay 80 completes an obvious operating circuit for section channel relay 93 which is associated with the paging channel PX extending to section No. 20.

Relay 93, operated, removes the compensating resistance 94 from the paging channel PC of the "selecting" position and transfers the section No. 20 loud-speaker system from the emergency broadcast channel EBC to the "selecting" operator's position paging channel PC. The "selecting" operator then operates key 70 to the right, or to the "page" position, thereby connecting the paging transmitter equipment PT to the paging channel PC by way of normal contacts of the emergency key 95. The "selecting" operator may now orally page the registrant, such as registrant No. 65, by talking into the transmitter associated with the transmitter paging circuit PT. The paging pronouncement may be of any suitable nature such, for example, as "Dr. Jones 221" which would indicate to Dr. Jones that he is requested to contact the party located at a telephone the number of which is 221. The paged doctor would then proceed to the nearest telephone and dial the number 221 to connect himself with the calling party. The nature of the pronouncement would, of course, depend upon

the circumstances which necessitated the paging of the registrant.

When the key 70 was operated to the right, or paging position, the circuit for selection relays 72 and 73 is opened and these relays release. The operating circuit for relay 71 is thus opened and this relay releases. With relays 71, 72 and 73 in their normal conditions, the guard lamp 74 at the "selecting" position is extinguished as are also the selection busy lamps 75 and 76 at the other positions. The selection grouping circuit is now available for use by other operators.

The page key, operated, connects the operator's transmitter directly across the paging channel PC, as above described, in parallel with a balanced retard coil, battery and ground supply circuit 100. All sound within the pick-up range of the operator's transmitter will be heard over the particular section loud-speaker system such as, in the case described, the section No. 20 loud-speaker system.

When the "selecting" operator has completed paging registrant No. 65 in section No. 20, she would momentarilly operate the release key 89 which opens the locking circuit for relay 80. Relay 80 releases, in turn releasing relay 93, thereby making section No. 20 available for use by other operators for paging purposes.

Manual selection

If an operator knows the section in which a registrant is to be paged it is only necessary for her to actuate a manual page key, such as key 101 associated with the lamp 91, which identifies the known section (section No. 20). This key operation completes the same functions described in connection with automatic selection but will by-pass the registry switch RS65. Actuating other keys such, for example, as key 102 will connect other section paging systems, such, for example, as the No. 1 section paging system, for simultaneous paging in more than one section. Thus, actuation of manual page keys 101 and 102, for example, will set up the circuits for simultaneous paging in sections Nos. 20 and 1.

Emergency broadcast paging

Should an emergency arise wherein an operator wishes to page in all sections simultaneously, she may operate her page key 70 to the paging position and then actuate the emergency key 95. Operation of the emergency key causes the lighting of busy lamps 103 at all operators' positions and connects the position transmitter to the emergency broadcast channel EBC and to all section paging systems which are not in use by other operators. The circuits in use are indicated by the common page busy lamps, such as lamps 91 and 104, for example. The emergency channel EBC enters the switchboard at position No. 1 and is chained through a series of contacts on the emergency keys of the other positions and terminates in a compensating resistance 105 in the last switchboard position. The series arrangement prevents the use of this channel by more than one operator at a time.

Silent paging of registrants

When an operator has received a message for a registrant which is not of an emergency nature and does not require the registrant to be paged immediately, or if an operator has paged a registrant without success she may take steps to page the registrant silently in the following manner: It will be recalled that when a registrant dials from any dial station in registering his location, the registry lamp, such as lamps 40 and 48 at section dial station No. 1 and lamps 40' and 48' at section dial station No. 20 were lighted steadily from the alternating current source 41. The circuit in which such lamps lighted included the inner key contact such as 43 associated with the key 44. In the event that it is desirable to advise a registrant that the operator has a message for him, the operator at position No. 1 would actuate the key, such as key 44, associated with the particular registrant's lamp 48, for example, to effectively insert the interrupter 106 in the lamp circuit. Thus, when the particular registrant dials from any section dial station the registry lamp thereat, such as lamps 40 and 48, or 40' and 48' would be operated intermittently, instead of steadily. Observing the flashing lamp, the registrant would recognize that a message is being held for him at the switchboard and he would proceed to contact the switchboard operator over the normal telephone facilities.

Registrant registers out

It will be observed that the twenty-first terminal of the registry switch RS65, and of all other similar switches illustrated, is marked Exit. When a registrant leaves the building he would dial his identification number from the exit control station which results in his particular registry switch, for example, registry switch RS65, being advanced to the twenty-first terminal and coming to rest thereon. The strapping of the terminals of the switch arc associated with the brush SR ends with terminal No. 20, so that when the switch reaches the twenty-first terminal the circuit to the registry lamps, such as 49 and 51 of switch RS65 is opened and such lamps are then extinguished, indicating to the operator that the particular registrant, such as registrant No. 65, for example, has left the building and is no longer available.

As the "exit" station is the last station from which a registrant would register, the relay 29 of the allotter AS would be individual to the connector controlled from the "exit" station.

If it should be desirable to provide more than one connector for a section, the uppermost armatures of all connector relays, such as relay 30 of connector CS1, would be connected together in chain fashion with ground potential associated only with the corresponding back contact of the last connector relay. This alternative arrangement is schematically indicated at the lower portion of Fig. 2.

What is claimed is:

1. In a combined indicating and paging system for use in a multi-section area for the purpose of indicating the location of a plurality of persons who may be located in any section of the said area and for paging such persons, a loud-speaker system for each section of said area, a control station in each section of said area, a central station, a transmitter at said central station, means controlled from the control station of any section for selectively preparing the corresponding section loud-speaker system for connection to said transmitter, and switching means at said central station for completing the connection of the selected loud-speaker system to the said transmitter.

2. In a combined indicating and paging system for use in a multi-section area for the purpose of indicating the location of a person who

may be located in any section of the said area and for paging such person, said person being assigned a predetermined call number, a loud-speaker system for each section of said area, a control station in each section of said area and equipped with means for transmitting the said call number, a central station, a transmitter at said central station, means responsive to the operation of said transmitting means at any of said control stations in accordance with the said call number for preparing the loud-speaker system of the section at which the said transmitting means is operated for connection to said transmitter, and means at said central station including a switching device individually corresponding to the said person for completing the connection of the said section loud-speaker system to said transmitter.

3. In a combined indicating and paging system for use in a multi-section area for the purpose of indicating the location of a plurality of persons who may be located in any section of the said area and for paging such persons, each of said persons being assigned a different call number, a central station, a display board thereat including indicators identifying each of the persons who may be paged over said system, a key individually corresponding to each of said indicators, a transmitter at said central station, a loud-speaker system for each section of said area, a control station at each section of said area including means for transmitting the said call numbers, means responsive to the operation of the transmitting means at any of said section control stations in accordance with the call number of any of the said persons for operating the indicator at said central station corresponding to the person whose call number is transmitted and for rendering the corresponding key effective to prepare the loud-speaker system of the section from which the call number is transmitted for connection to said transmitter, and means at said control station including the said corresponding key for completing the connection of the said section loud-speaker system to said transmitter.

4. In a combined indicating and paging system for use in a multi-section area for the purpose of indicating the location of a person who may be located in any section of the said area and for paging such person, said person having a predetermined call number, a central station, a display board thereat including an indicator individually corresponding to the said person, a key corresponding to said indicator, a transmitter at said central station, a loud-speaker system for each section of said area, a control station at each section of said area including means for transmitting the call number of said person, means responsive to the operation of the said transmitting means at any of said section control stations in accordance with the call number of said person for operating said indicator and for simultaneously rendering said key effective to prepare the loud-speaker system of the section from which the call number is transmitted for connection to said transmitter, and means at said central station including said key for completing the connection of the said section loud-speaker system to said transmitter.

5. The combined indicating and paging system defined in the preceding claim and in which signaling means are provided at said central station for indicating to which loud-speaker system the said transmitter is connected.

6. In a combined indicating and paging system for use in a multi-section area for the purpose of indicating the location of a person who may be located in any section of the said area and for paging such person, said person having a predetermined call number, a central station, a display board thereat including an indicator individually corresponding to said person, a key corresponding to said indicator, a multi-position switch individual to said person and having a position corresponding to each section of said area, a control station at each section of said area including means for transmitting the call number of said person, a loud-speaker system for each section of said area, a transmitter at said central station, a selector switch for each section of said area, means responsive to the operation of the said transmitting means at any of said section control stations in accordance with the call number of said person for directively controlling said selector switch to cause it to seize said multi-position switch and advance it to a position corresponding to the section at which the operated transmitting means is located and for completing an operating circuit for said indicator, means including said key and said multi-position switch when in a position corresponding to the said section at which said transmitting means is operated for preparing the corresponding section loud-speaker system for connection to said transmitter, and means at said central station for completing the connection of the said section loud-speaker system to said transmitter.

7. In a combined indicating and paging system for use in a multi-section area for the purpose of selectively paging in any section of the said area persons who may be paged over said system, a loud-speaker system individual to each section of said area, a central station, an operator's position thereat equipped with a paging transmitter, a paging channel for said operator's position, separate means for connecting each of said loud-speaker systems to said paging channel, means at said operator's position for preparing an operating circuit for all of said separate connecting means, a control station at each section of said area, means controlled from any of said control stations for further preparing an operating circuit for the separate connecting means of the loud-speaker system corresponding to the section from which said last-mentioned means is controlled, and means at said central station for completing the operating circuit for the said separate connecting means whereby the paging transmitter of said operator's position is extended to the loud-speaker system of the section from which said further preparing means is controlled, by way of said paging channel.

8. In a combined indicating and paging system for use in a multi-section area for the purpose of selectively paging in any section of said area persons who may be paged over said system, a central station, a paging transmitter thereat, a loud-speaker system for each section of said area, a paging channel, separate means for connecting each of said loud-speaker systems to said paging channel, means controlled from any of said sections for preselecting a certain one of said separate connecting means for operation, and means at said central station for completing the operation of the preselected separate connecting means whereby the said paging transmitter is connected to the loud-speaker system corresponding to the section from which said prese-

lecting means is controlled, by way of said paging channel.

9. In a combined indicating and paging system for use in a multi-section area for the purpose of selectively paging in any section of said area persons who may be paged over said system, a loud-speaker system for each section of said area, a central station, a control station for each section of said area, a paging transmitter at said central station, means controlled from the control station at any one of said sections for preselecting the corresponding loud-speaker system, and means at said central station effective only after the operation of the said preselecting means for connecting the preselected loud-speaker system to said paging transmitter.

10. The combined indicating and paging system defined in the preceding claim and in which visual signaling means at said central station operates to identify the loud-speaker system to which said paging transmitter is connected.

11. In a system for indicating the location of a plurality of persons who may be located in any section of a multi-section area and who are each assigned a different predetermined call number, a central station, a display board thereat including a signal device for each of said persons and a signal device for each section of said multi-section area, a control station at each section of said area and each equipped with means for transmitting said call numbers, means responsive to the operation of the transmitting means at a particular one of said control stations in accordance with the call number of a particular one of said persons for operating the signal device corresponding to the said particular person and for simultaneously preparing an operating circuit for the signal device corresponding to the section at which the said particular one of said control stations is located, and means at said central station operable to automatically complete the operating circuit for said last-mentioned signal device.

12. In a system for indicating the location of a person who may be located in any section of a multi-section area and which person is assigned a predetermined call number, a central station, a display board thereat including a first signal device by which the presence of said person in the said area is indicated and a second signal device identifying each of the sections of said area, a control station at each of said sections, a switching device individual to said person and having settings individually corresponding to each of said sections, means at any of said control stations operable in a manner indicative of the call number assigned to said person for advancing said switching device to a setting corresponding to the section in which the said person is located, whereby an operating circuit for said first signal device is completed and an operating circuit for the second signal device corresponding to the section in which the said person is located is prepared, and means at said central station individual to the said person for completing the operating circuit for the said second signal device.

13. In a system for indicating the location of a plurality of persons who may be located in any section of a multi-section area and who are each assigned a different predetermined call number, a central station, a display board thereat including a plurality of first signal devices each individual to one of said persons and a plurality of second signal devices each identifying a particular section of said area, a control station at each of said sections, a switching device individually assigned to each of said persons and having settings individually corresponding to each of said sections, means at each of said control stations operable in a manner indicative of the call numbers assigned to said persons, means responsive to the operation of said last-mentioned means at a particular control station in a manner indicative of the call number of a particular one of said persons for causing the switching device assigned to the said particular person to advance to a setting corresponding to the section at which the said particular control station is located, means effective upon the arrival of said switching device at the said setting for simultaneously operating the first signal device corresponding to the said particular person and preparing an operating circuit for the second signal device corresponding to the section at which the said particular control station is located, and means at said central station for completing the operating circuit for the said second signal device.

14. In a system for indicating the location of a person who may be located in any section of a multi-section area and which includes control stations individual to said sections, a central station, a display unit thereat including a signal device individual to each section of the multi-section area, means controlled by the said person from any of said control stations for preparing the signal device individual to the section in which the control station is located for operation, and means at said central station individually corresponding to said person for automatically operating the signal device corresponding to the section from which said signal device was prepared for operation.

15. In a system for indicating the location of persons who may be located in any section of a multi-section area and which includes control stations individual to said sections, a central station, a display unit thereat including a signal device individual to each section of the multi-section area, means individual to each of said persons controllable from any of said control stations for preparing the signal devices individual to the sections in which the control stations are located for operation, and means at said central station individually corresponding to each of said persons for automatically causing the operation of the signal devices corresponding to the sections from which said signal devices were prepared for operation.

16. In a system for indicating the location of a person who may be located in any section of a multi-section area and which includes control stations individual to said sections, a central station, a display unit thereat including a signal device individual to each section of the multi-section area, a stepping switch individual to said person and having a position thereof corresponding to each of said sections, means at each of said control stations for causing said stepping switch to advance to a position corresponding to the section in which the control station employed is located and to thereby prepare an operating circuit for the corresponding section signal device at said central station, and means at said central station individually corresponding to said person for completing the operating circuit for said section signal device.

17. In a system for indicating the location of

persons who may be located in any section of a multi-section area and which includes control stations individual to said sections, a central station, a display unit thereat including a signal device individual to each section of the multi-section area, a stepping switch individual to each of said persons and each having positions corresponding individually to said sections, means at each of said control stations operable by any of said persons for advancing his corresponding stepping switch to a position corresponding to the section in which the control station employed is located, means effective upon the arrival of the said switch to a particular positon for preparing an operating circuit for the signal device at said central station corresponding to the section identified by the position to which said switch is advanced, and means at said central station individually corresponding to each of said persons for completing the operating circuit for said signal device.

18. In a system for indicating the location of a person who may be located in any section of a multi-section area and which includes control stations individual to said sections, a central station, a display unit thereat including a signal device individual to each section of the multi-section area, a stepping switch individual to said person and having positions corresponding individually to each of said sections, an automatic switch for each of said sections, means at each of said control stations for seizing the corresponding section automatic switch and for directively controlling said switch to cause it to selectively seize said stepping switch and to advance it to a position corresponding to the section at which the control station employed is located, means effective when said stepping switch is advanced to any of its positions for preparing an operating circuit for the signal device corresponding to the section position to which said stepping switch is advanced, and manually operable means at said central station individually corresponding to said person for completing the operating circuit of the signal device corresponding to the section position to which said stepping switch is advanced.

19. In a system for indicating the location of persons who may be located in any section of a multi-section area and which includes control stations individual to said sections, a central station, a display unit thereat including a signal device individually corresponding to each of said sections, a selector switch for each of said sections, a registry switch for each of said persons and each having positions corresponding to each of said sections, means at each of said control stations for selectively operating the selector switches of the corresponding section to cause it to selectively seize said registry switches and to advance said registry switches each to a position corresponding to the section at which the control stations from which said selector switches are operated are located, means controlled by each of said registry switches when advanced to a position corresponding to the section from which said selector switches were operated for preparing operating circuits for corresponding ones of said signal devices, and switching means at said central station corresponding individually to each of said persons for completing the circuits to said signal devices.

20. In a registry system for use in a multi-section area for the purpose of indicating the location of a person who may be located in any section of said area, said person having a predetermined call number, a central station, a control station at each section of said area, a signal at said control station corresponding to said person, a signal at each of said control stations, a registry switch individual to said person and having a terminal position for each section of said area, a connector switch for each section of said area, a dial at each of said control stations, means responsive solely to the off-normal movement of a dial at any of said control stations for preparing the corresponding section connector for the receipt of pulses transmitted incident to the operation of said dial, means responsive to the dialing of the call number of said person at the said any of said control stations for causing the said person's corresponding registry switch to be operated to a position corresponding to the section at which the said any of said control stations is located, a first circuit common to all section positions of said registry switch over which the signal at said central station is operated incident to the operation of said registry switch to any of its section positions, a second circuit paralleling said first circuit over which the signal at the said any of said control stations is operated incident to the operation of the corresponding section connector, and means at said central station for altering the character of the signal at the said any of said control stations.

FRANKLIN DAVID NITTERAUER.