June 19, 1923. 1,459,122

W. H. VAN VICKLE

ROAD DRAG

Filed March 27, 1922

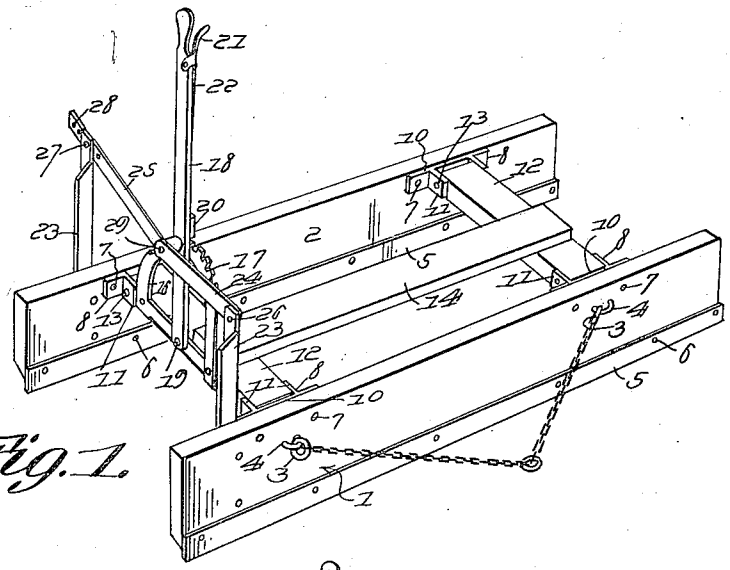

Fig. 1.

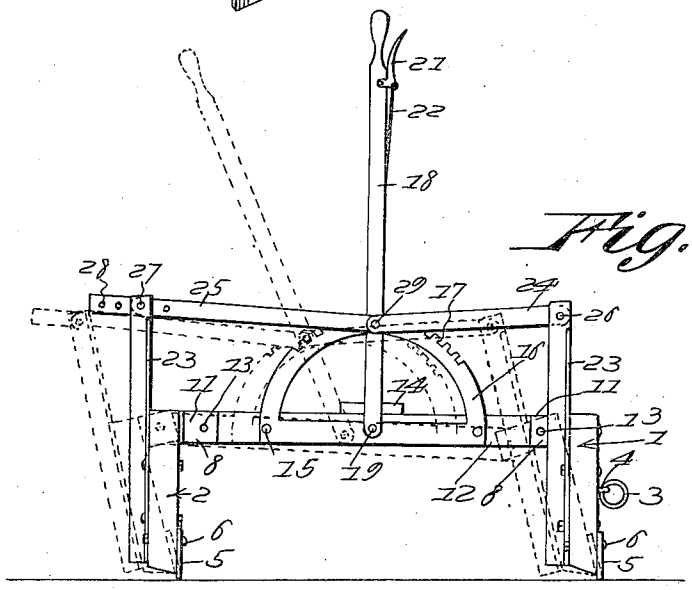

Fig. 2.

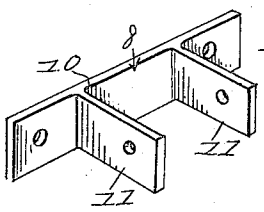

Fig. 3.

Inventor

W. H. Van Vickle,

By Watson E. Coleman

Attorney

Patented June 19, 1923. 1,459,122

UNITED STATES PATENT OFFICE.

WILLIAM HANDLEY VAN VICKLE, OF MOUND CITY, MISSOURI, ASSIGNOR OF ONE-HALF TO WILSON JOSEPH AESDALE, OF MOUND CITY, MISSOURI.

ROAD DRAG.

Application filed March 27, 1922. Serial No. 547,240.

To all whom it may concern:

Be it known that I, WILLIAM H. VAN VICKLE, a citizen of the United States, residing at Mound City, in the county of Holt and State of Missouri, have invented certain new and useful Improvements in Road Drags, of which the following is a specification, reference being had to the accompanying drawings.

It is well known that there are many different constructions of drags, wherein the blades are adjustable by means of levers, but in the best of them, the entire construction thereof is made of metal, therefore such machines are more or less too heavy, and very expensive.

It is, therefore, the purpose of the present invention to construct a road drag, wherein the operating means for the blades, and what is called the drag irons for connecting the blades are constructed of metal, enabling the manufacturer to utilize wooden scraper blades, and wooden connecting links between the blades, for the support of a wooden platform, so that a road drag may be produced for a reasonable cost.

Another purpose is the provision of wooden blades, including metallic shoes on the forward lower portions of the blades, to cut the soil and to protect the blades from wearing on the bottoms.

Still another purpose is the provision of a road drag, wherein connecting links (which are constructed of wood) support an operator's platform, and which are pivotally connected to the blades, so as to at all times remain substantially level, yet enabling the blades to be adjusted at different angles. If the blades are inclined forward and downwardly, they have less cutting action on the road, due to the shoes being out of contact with the road, and if the blades are vertical, the cutting action is lessened, and if inclined downwardly and rearwardly, the cutting action is greatly increased.

A further purpose has to do with the improved operating means, which is so connected to the blades, that the blades can be inclined in either of these directions conveniently and readily while the road drag is in operation, without disturbing the position of the connecting links.

Furthermore it is the aim to provide metallic operating means and metallic drag irons, so that such parts can be made as articles of manufacture, being sold in sets, so that by constructing wooden connecting links and blades and applying them to the metallic operating means and drag irons, a very cheap road drag can be produced, and one wherein the connecting links and blades may be renewed at any time.

It is to be understood that the particulars herein given are in no way limitative and that while still keeping within the scope of the invention, any desired modifications of detail and desired proportions may be made in the apparatus according to circumstances.

The invention comprises further features and combination of parts, as will be hereinafter set forth, shown in the drawings and claimed.

In the drawings:—

Figure 1 is a view in perspective of the improved road drag constructed in accordance with the invention;

Figure 2 is an end view, showing the vertical positions of the blades, the forwardly and downwardly, and rearwardly and downwardly inclined positions of the blades in dotted lines;

Figure 3 is an enlarged detail perspective view of one of the drag irons.

Referring to the drawings, 1 and 2 designate the forward and rear scraper blades, which may be constructed of any suitable material, preferably wood. On the front face of the forward blade suitable rings or eyes 3 are connected to eyes 4, whereby a conventional form of equalizer may be attached to the road drag, for traversing the drag over the road. In other words draft animals may be attached to the equalizer (not shown), for drawing the machine.

Adjacent the lower forward edges of the blades 1 and 2 suitable road drag shoes 5 are attached by means of bolts 6. Obviously these shoes may be renewed when worn out, and are designed primarily for cutting the soil and protecting the blades from wearing on the bottoms.

Secured to the inner adjacent faces of the blades by means of bolts 7 are what may be termed as drag irons 8. Each drag iron is in the form of a plate 10 having ears or lugs 11, which are properly spaced for the reception of the ends of the connecting links or beams 12 (which are constructed preferably of wood) for the purpose of pivotally connecting the blades. In fact bolts

13 pass through the ears or lugs 11 and through the ends of the connecting links or beams 12 to provide pivots.

A suitable platform 14 is secured in any suitable manner to the upper faces of the links or beams 12, for the purpose of supporting an operator, preferably in standing position, in order that the operating means for the blades may be adjusted.

Secured to one edge of one of the beams 12 by means of bolts 15 is a segment rack 16 having teeth 17. A conventional form of lever 18 is pivoted at 19 to the segment rack, and is designed to swing on a radius concentric with the center of the plate. This lever is provided with a conventional form of spring retained dog 20, which is designed to cooperate with the teeth of the segment rack, to hold the lever in different adjusted positions, there being a hand grip 21 mounted adjacent the handle of the lever 18 and connected by a link 22 to the dog, for the purpose of operating the same.

Rising from and secured to the rear faces of the blades 1 and 2, at positions adjacent one of the connecting beams 12 are angle bars or arms 23. Links 24 and 25 are pivotally connected at 26 and 27 to the upper ends of the angle arms or bars 23. The pivot 26 is permanent. However the link 25 at its rear end is provided with a plurality of apertures 28, any one of which receives the pivot 27 (which is in the form of a bolt). Obviously this bolt 27 can be adjusted in any one of the apertures 28, for adjusting the rear blade 2 relatively to the forward blade 1. The blades may operate in parallelism, when shifted to assume different angles relatively to the road bed, but when the bolt 27 is adjusted in the rearmost aperture or opening 28, the rear blade 2 will assume an angular position relatively to the forward blade. The adjacent ends of the links 24 and 25 are pivotally connected by means of a bolt 29 to the lever 18.

Obviously the operator while standing upon the platform 14 may move the lever 18 forwardly or rearwardly, and thereby change the angular positions of the blades 1 and 2. If the lever is moved rearwardly, it is obvious that the shoes 5 on the blades will elevate from engagement with the road bed. If the lever 18 is adjusted forwardly, then the shoes will cut deeper into the soil.

The invention having been set forth, what is claimed is:—

In a road drag comprising a pair of scraping blades disposed in spaced parallel relation to each other, spaced brackets carried by the confronting faces of each blade, a beam extending between said blades and disposed within the brackets whereby said blades may move relative to the beams, a lever pivoted to one of said beams, an arm projecting from each blade, links projecting from each arm and pivotally connected at their ends to the lever, one of said links being adjustable, said links being adapted to adjust themselves according to the movement of the lever and the position of the arms of the blades.

In testimony whereof I hereunto affix my signature.

WILLIAM HANDLEY VAN VICKLE.