United States Patent [19]

Garas

[11] **3,873,152**

[45] **Mar. 25, 1975**

[54] **ADJUSTABLE ORTHOPEDIC LOUNGER**

[76] Inventor: **John Garas,** 6706 Jefferson St., Merrillville, Ind. 46410

[22] Filed: **Jan. 9, 1974**

[21] Appl. No.: **431,867**

[52] **U.S. Cl.** **297/68,** 297/330

[51] **Int. Cl.** **A47c 1/034**

[58] **Field of Search** 297/68, 330, 361, 362; 5/67, 66, 69

[56] **References Cited**

UNITED STATES PATENTS

27,645	3/1860	McGregor	297/68
607,538	7/1898	Bergman	297/68
912,214	2/1909	Ward	5/67
1,297,683	3/1919	Hansen	5/67 X
2,233,797	3/1941	Potter	297/68
2,481,133	9/1949	Luketa	297/330 X
2,514,655	7/1950	Luketa	297/330
2,834,397	5/1958	Kluglein	297/68

Primary Examiner—Francis K. Zugel

[57] **ABSTRACT**

An orthopedic lounger adjustable between a straight bed-like position and an upright chair position as well as to any angle therebetween and which is comprised of a floor engaging base having a supporting frame mounted on the top thereof and to which is stationarily mounted a cushioned seat having a leg rest disposed adjacent one end thereof and pivotally mounted on the frame for movement between a straight position and a downward position relative to the plane of the seat by control of suitable linkage connections on the frame as powered by an electric motor, and with an integral head and back rest portion disposed adjacent the opposite end of the seat and pivotally mounted to the frame for movement between a straight position and an upright position relative to the seat as effected by suitable linkage means associated with the frame as powered by the aforesaid electric motor such that the lounger may be adjusted into any selected position.

1 Claim, 3 Drawing Figures

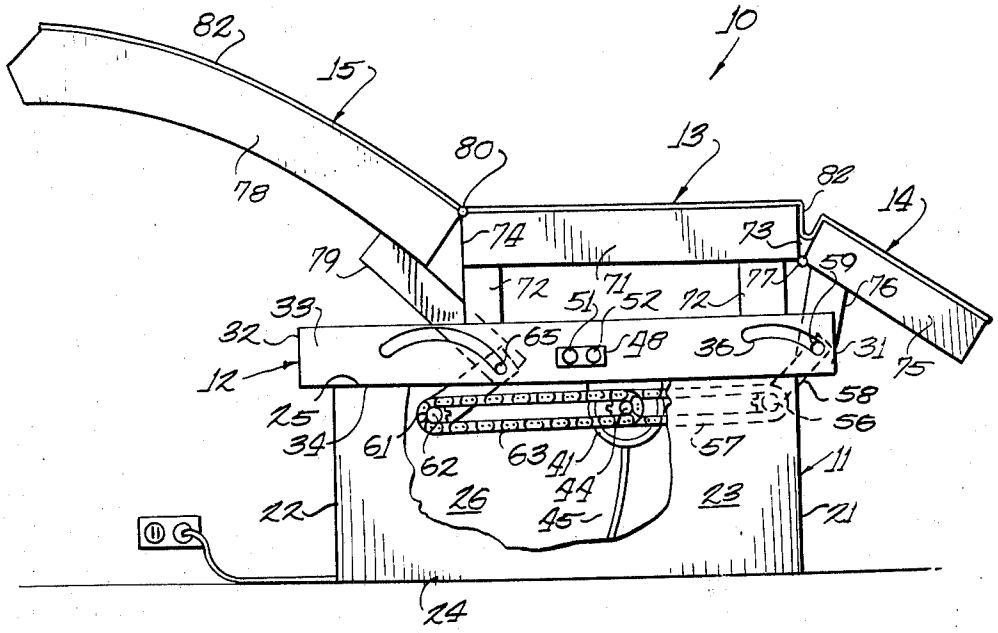

Fig. 1.

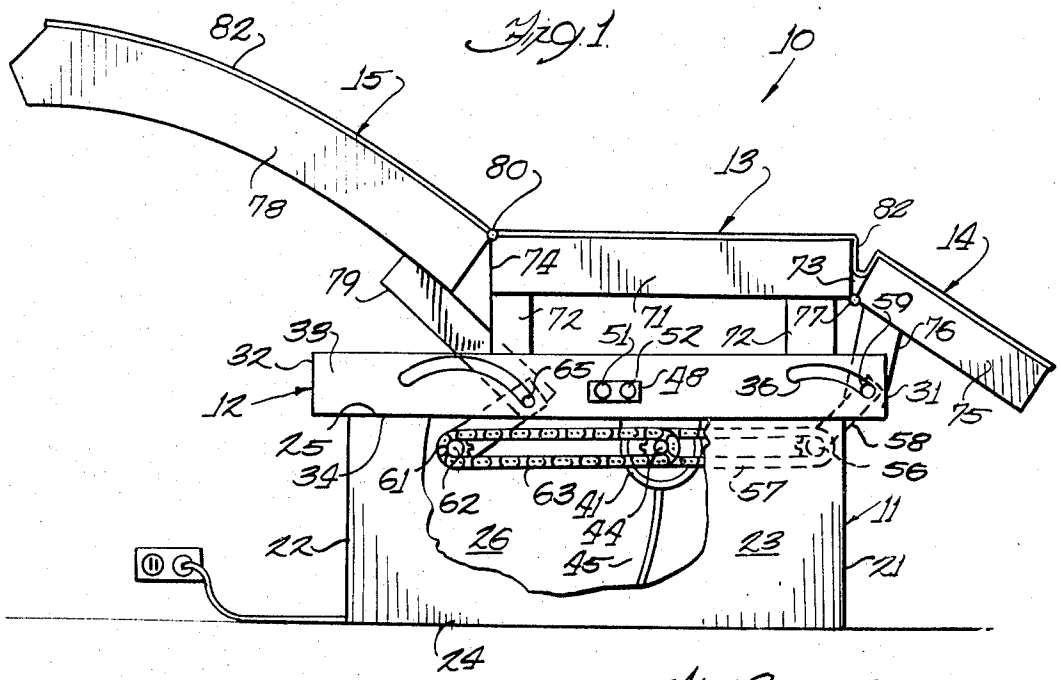

Fig. 2.

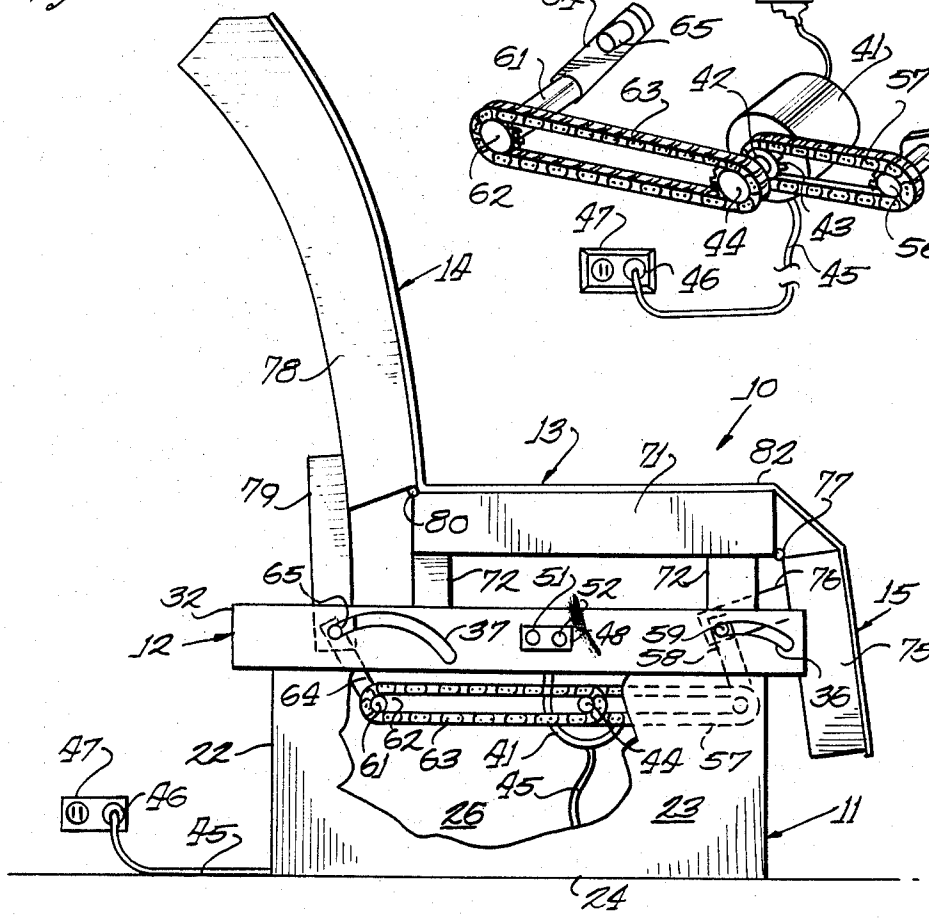

Fig. 3.

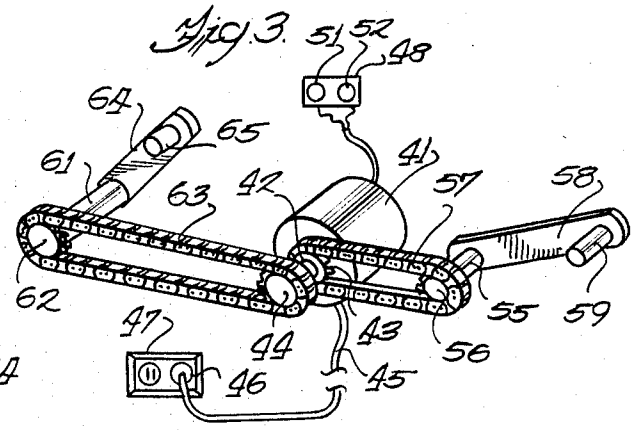

ADJUSTABLE ORTHOPEDIC LOUNGER

BACKGROUND OF THE INVENTION

1. Field of the Invention

This invention relates generally to chairs of the lounging type and more particularly to a novel lounger developed to provide desirable orthopedic support and adjustable between a straight position and an upright position as well as to any angle therebetween.

2. Description of the Prior Art

Many individuals throughout the world are afflicted with various types of back problems or leg problems, such as slipped discs and the like, with these individuals often finding it difficult and painful when attempting to sit or relax comfortably in chairs, couches, and other types of furniture as conventionally used by individuals not having such problems. However, due to the supporting characteristics and normal angles of such conventional furniture, such individuals normally cannot rest on the same without suffering some type of pain, this affecting the individual's social activities since the individual is not able to entertain other individuals for any length of time in an enjoyable manner.

While prior art devices have attempted in one way or another to provide comfortable seating for such individuals in a manner to minimize the pain, such have not met with commercial success or been fully accepted by the consuming public due to such devices suffering from one or more disadvantages such as being overly complex in operation, difficult to repair and maintain, costly to purchase, being of a large and bulky size so as to not be aesthetically pleasing and fit into a normal room of furniture, and the like.

SUMMARY OF THE INVENTION

The present invention recognizes the need of individuals suffering from back trouble and the like and provides a novel solution thereto in the form of an orthopedic lounger specifically designed to fit the decor of normal conventional home furnishings and which provides suitable head, back, seat and leg rests which are adjustable as selected by the individual while resting on the lounger in a manner to provide the most desirable positions of the lounger for a comfortable, relaxing and enjoyable relief of pain of the individual.

It is a feature of the present invention to provide an orthopedic lounger selectably adjustable by an individual resting thereon between a straight position and an upright position and any angle therebetween.

A further feature of the present invention provides an orthopedic lounger of a compact size and configuration adapted to readily fit into the decor and size of conventional home furnishings.

Yet still a further feature of the present invention provides an orthopedic lounger wherein the adjustment is accomplished by remote control conveniently situated in the frame of the chair in a position to be readily operated by the fingertips of one of the individual's hands while the individual is seated or laying on the lounger in the intended manner.

Among further features and provisions of the present invention is the provision of an orthopedic lounger which is relatively simple in its construction and which therefore may be readily manufactured at a relatively low cost and by simple manufacturing methods in comparison to presently available orthopedic devices; one which is possessed of few parts and therefore is unlikely to get out of order; one which is rugged and durable and which therefore may be guaranteed by the manufacturer to withstand many years of intended usage; one which is easy to use and reliable and efficient in operation; one which is aesthetically pleasing and refined in appearance; and one which is otherwise well adapted to perform the services required of it.

Other features and advantages of this invention will be apparent during the course of the following description.

BRIEF DESCRIPTION OF THE DRAWINGS

In the accompanying drawings forming a part of this specification, and in which like reference characters are employed to designate like parts throughout the same:

FIG. 1 is a side elevational view of the orthopedic lounger constructed in accordance with the principles of the present invention;

FIG. 2 is a side elevational view similar to FIG. 1 but with the lounger adjusted to the upright position; and

FIG. 3 is a diagrammatic perspective view of the control linkage of the lounger as driven by an electric motor.

DESCRIPTION OF THE PREFERRED EMBODIMENT

Referring now to the drawings in detail there is illustrated a preferred form of an orthopedic lounger constructed in accordance with the principles of the present invention and which is designated generally in its entirety by the reference numeral **10** and which is comprised of a floor engaging base **11** having a supporting frame **12** mounted on the top thereof and to which is affixed a stationary seat portion **13** having a leg rest portion **14** associated at one end thereof and pivotally attached for movement relative to frame **12**, and having an integral head and back rest portion **15** associated with the opposite end thereof and which is in turn also pivotally connected with the frame **12** for movement thereon.

The floor engaging base **11** is preferably of a hollow box-like rectangular configuration having a front end wall surface **21**, a back end wall surface **22**, opposed side wall surfaces **23**, a bottom floor engaging surface **24**, and a top surface **25**, the surfaces defining interiorly thereof a hollow compartment **26**. Mounted on top surface **25** is the supporting frame **12** which is of a general rectangular configuration having a front edge **31**, a back edge **32**, opposed side wall members **33**, a bottom surface **34**, and a top surface **35**. Disposed in one of the side wall members **33** adjacent front end **31** is an arcuate slot **36**, with there being disposed in the same side wall surface adjacent back edge **32** a second arcuate slot **37**.

Mounted in compartment **26** is an electric motor **41** having a shaft **42** which is provided with a pair of axially spaced apart concentrically disposed toothed sprocket wheels **43** and **44**, the motor being connected by a suitable electrical cord **45** terminating in an electrical plug **46** adapted to be plugged into a conventional household receptacle **47** for supplying power to the motor. The motor **41** is electrically reversible and is provided with a control panel **48** mounted in one of the frame side wall members **33** and which includes thereon suitable push button switches **51** and **52** with switch **51** energizing the motor in a clockwise direction

and with switch **52** energizing the motor in a counterclockwise direction, it being understood that the motor remains energized as long as the respective switch is manually held in the on position with release of the switch effecting the de-energization of the motor.

Extending horizontally transversely between base side wall surfaces **23** adjacent front end wall **21** near top wall surface **25** is shaft **55** which is journaled for rotation between the side wall surfaces and which has affixed thereon a toothed sprocket **56** which is connected by an endless sprocket chain **57** to motor sprocket **42** for simultaneous operation therewith. Spaced from sprocket **56** on shaft **55** is lever arm **58** which projects radially outwardly from the shaft and terminates at an opposite end wherein there is affixed thereto a guide pin **59** which projects outwardly therefrom in a direction parallel to the shaft **55** and is engaged in arcuate slot **36** for guided supportive movement therealong.

Similarly, extending horizontally transversely between base side wall surfaces **23** adjacent base end wall surface **22** adjacent top wall surface **25** is a shaft **61** journaled for rotation between the side surfaces and having a toothed sprocket wheel **62** affixed thereon which is coupled to motor sprocket wheel **44** by means of endless sprocket chain **63.** Spaced from sprocket **62** is lever arm **64** having one end affixed on shaft **61** with the lever arm projecting radially outwardly therefrom and terminating a distance therefrom with there being provided at the terminal end thereof a guide pin **65** projecting outwardly therefrom parallel to shaft **61** and adapted to be supportively guidingly engaged in arcuate slot **37** of frame side wall member **33.**

The seat portion **13** is comprised of a rectangularly shaped cushion **71** supported by members **72** in a stationary position above supporting frame **12,** the cushion having a front end **73** and a back end **74.** The leg rest portion **14** is comprised of a substantially rectangularly shaped cushion **75** supported by member **76** adjacent seat portion front end **73** with member **76** projecting downwardly from the cushion and having an aperture extending therethrough which is received on guide pin **59** such that movement of the guide pin effects the simultaneous movement of the cushion **75** between a downward projecting position and a straight position or any angle therebetween, the bottom edge of cushion **75** adjacent cushion **71** being hingedly connected thereto by transversely extending hinge member **77.** The integral head and back rest portion **15** is comprised of a somewhat bowed rectangularly shaped cushion **78** which is supported adjacent seat back end **74** by a member **79** which projects outwardly from the cushion to be pivotally joined with guide pin **65** for pivotal movement therewith, the top edge of cushion **78** adjacent the top edge of seat cushion **71** being hingedly connected thereto by hinge **80** which projects transversely thereacross. It is to be understood that the cushions **71, 75** and **78** are manufactured preferably of vinyl covered polyurethane foam of an appropriate density and thickness, and that the cushions include frame structural members to retain the general shape and rigidity thereof when an individual is resting thereon.

A covering sheet member **82** is provided which overlies the top surface of cushions **78, 71** and **75** for the comfort of the individual resting thereon as well as to improve the aesthetic appearance thereof as to covering the portions between adjacent cushions such as at hinges **80** and **77.** In operation an individual sits or lays on the orthopedic lounger **10,** depending upon the associated positions of the cushions, after which the individual depresses either of the buttons **51** or **52** in a manner to activate the electric motor **41** to pivot cushion **78** relative to cushion **71** as well as to simultaneously pivot cushion **75** relative to stationary cushion **71** until the selected position of the lounger has been achieved, at which time the individual releases the previously depressed switch button which retains the cushions in the selected positions.

There is thus provided a novel orthopedic lounger adjustable between a straight position and an upright position or any angle therebetween for relief of pain of individuals resting thereon who suffer from back trouble, leg problems, and the like so that such individuals can relax in an enjoyable comfortable manner substantially free of pain and thus able to converse and enjoy company of other individuals in the home.

It is to be understood that the form of this invention herewith shown and described is to be taken as a preferred example of the same, and that this invention is not to be limited to the exact arrangement of parts shown in the accompanying drawings or described in this specification as various changes in the details of construction as to shape, size, and arrangement of parts may be resorted to without departing from the spirit of the invention, the scope of the novel concepts thereof, or the scope of the sub-joined claims.

Having thus described the invention, what is claimed is:

1. An orthopedic lounger comprising:

a floor engaging base;

a supporting frame mounted atop the base and having a front end, a back end, opposed side wall members, a top surface, and a bottom surface;

a seat portion constituting a unitary structure and stationarily mounted to said support frame in a position spaced vertically thereabove, said seat having a front end and a back end;

a leg rest portion having a front end and a back end, said back end of said leg rest portion disposed adjacent said front end of said seat portion;

hinge means connecting said back end of said leg rest portion to said front end of said seat portion for relative pivotal movement in a vertical plane pivotally about a horizontal transverse axis;

an integral head and back rest portion having a top end and a bottom end, said bottom end disposed adjacent said back end of said seat portion;

hinge means connecting the adjoining edges of said back rest bottom end to said back end for relative pivotal movement on an axis parallel to the pivotal connection of said leg rest to said seat portion;

one of said side wall members of said supporting frame being provided with a first arcuate slot adjacent the front end thereof and a second arcuate slot adjacent the back end thereof;

a reversible electrically operated motor having a shaft extending out of one end thereof;

a pair of axially spaced apart concentrically disposed toothed sprocket wheels disposed on said motor shaft;

a first horizontal disposed transversely extending shaft carried rotatably by said base adjacent said front end wall thereof;

a second horizontal disposed transversely extending shaft carried rotatably by said base adjacent said back end wall thereof;

said first shaft having a toothed sprocket wheel affixed concentrically thereto;

a first endless sprocket chain trained about said first sprocket wheel and said first mentioned of said motor sprocket wheels;

an elongated operating lever arm having one end affixed to said first shaft with said lever arm projecting radially outwardly therefrom;

a guide pin extending outwardly of said arm substantially normal thereto and received in said first arcuate slot of said supporting frame side wall member such that operation of said motor will effect reciprocal movement of said guide pin through said slot;

a sprocket wheel affixed concentrically to said second shaft;

a second endless sprocket chain trained about said second sprocket wheel and said second mentioned motor sprocket wheel for drivingly interconnecting the same;

a second elongated operating lever arm having one end affixed to said second shaft with said arm projecting radially outwardly therefrom;

a second guide pin affixed to said second lever arm and projecting outwardly therefrom substantially normal thereto and adapted to be freely received in said second arcuate slot of said supporting frame side wall member such that energization of said motor will effect the reciprocal movement of said second guide pin through said second slot;

a guide member connected to said back rest and operable to effect said pivotal movement thereof between a position lying in the plane of the seat and a position disposed upright relative thereto as well as to any selected position therebetween;

said back rest guide member having one end affixed to said back rest with said guide member projecting outwardly therefrom and having the opposite end thereof operatively connected to second guide pin with movement of said guide pin in said arcuate slot effecting the pivotal swinging movement of said back rest relative to said seat;

a guide member connected to said leg rest portion and operative in a manner to effect the pivotal movement thereof between a position lying substantially in the plane of said seat and a position disposed downwardly therefrom as well as to any selected position therebetween;

said leg rest guide member has one end affixed to said leg rest with the opposite end projecting outwardly therefrom and operatively connected to said first guide pin with movement of said guide pin effecting the pivotal movement of said leg rest relative to said seat;

an electrical control switch including a pair of electrical push button switches adapted to be manually held in an "on" position with release of the push buttons effecting the return thereof to their normal "off" positions, a first one of said push buttons effecting the clockwise rotation of said motor with the second one of said push buttons effecting the counter-clockwise rotation of said motor, permitting an individual to selectively simultaneously adjust said back rest and said leg rest relative to said seat; and

an integral sheet like member overlying the top surfaces of said back rest portion, said seat portion and said leg rest portion to provide a smooth continuous cover layer thereover.

* * * * *