(No Model.) 4 Sheets—Sheet 1.

F. A. GARDNER.

COMPOUND STEAM ENGINE.

No. 405,208. Patented June 11, 1889.

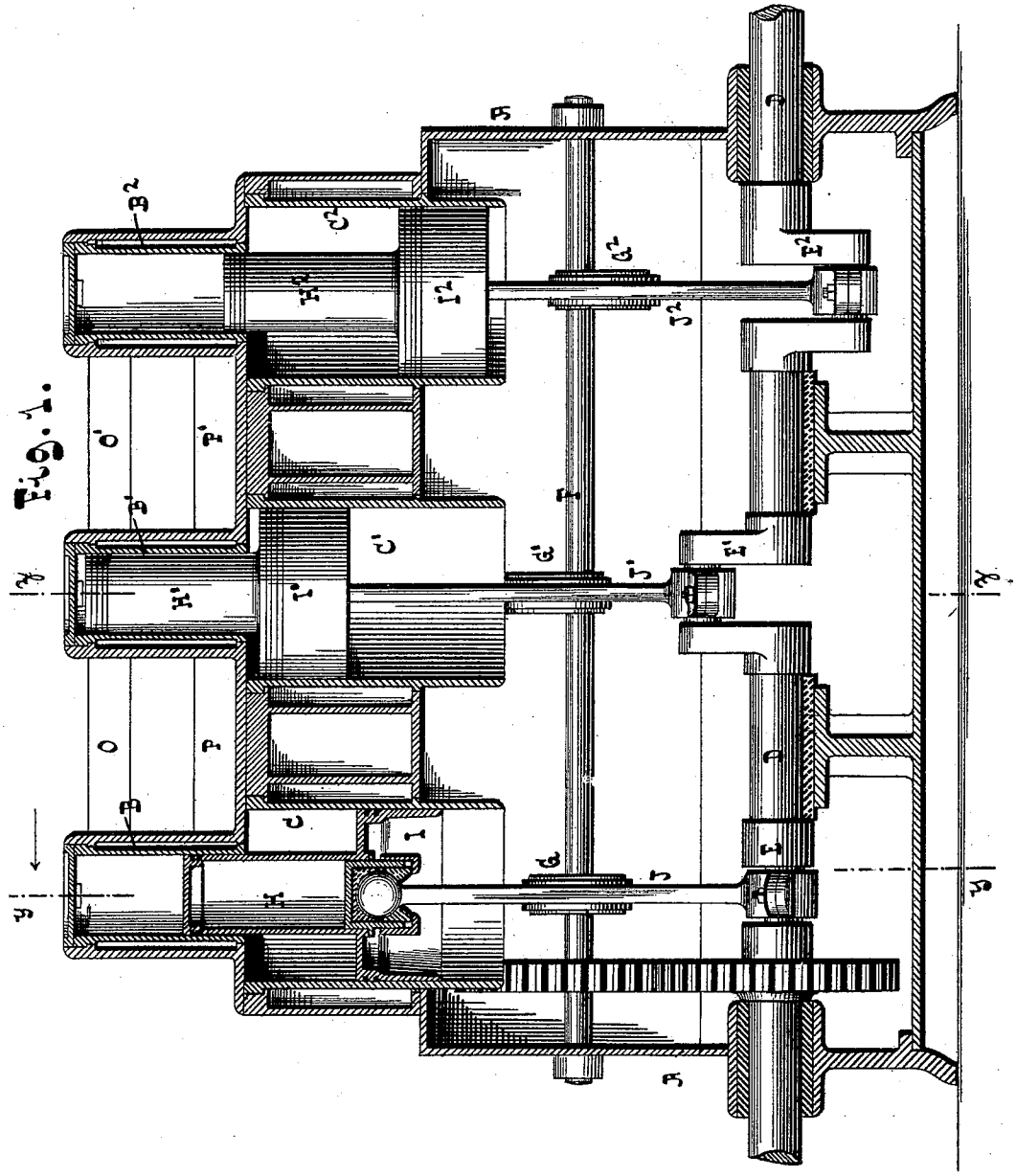

Fig. 1.

WITNESSES:

A. Faber du Faur

Eduard Wolff.

INVENTOR

Frederick A. Gardner.

BY

Van Santvoord & Hauff

his ATTORNEYS

N. PETERS, Photo-Lithographer, Washington, D. C.

(No Model.) 4 Sheets—Sheet 2.

F. A. GARDNER.

COMPOUND STEAM ENGINE.

No. 405,208. Patented June 11, 1889.

Fig. 2.

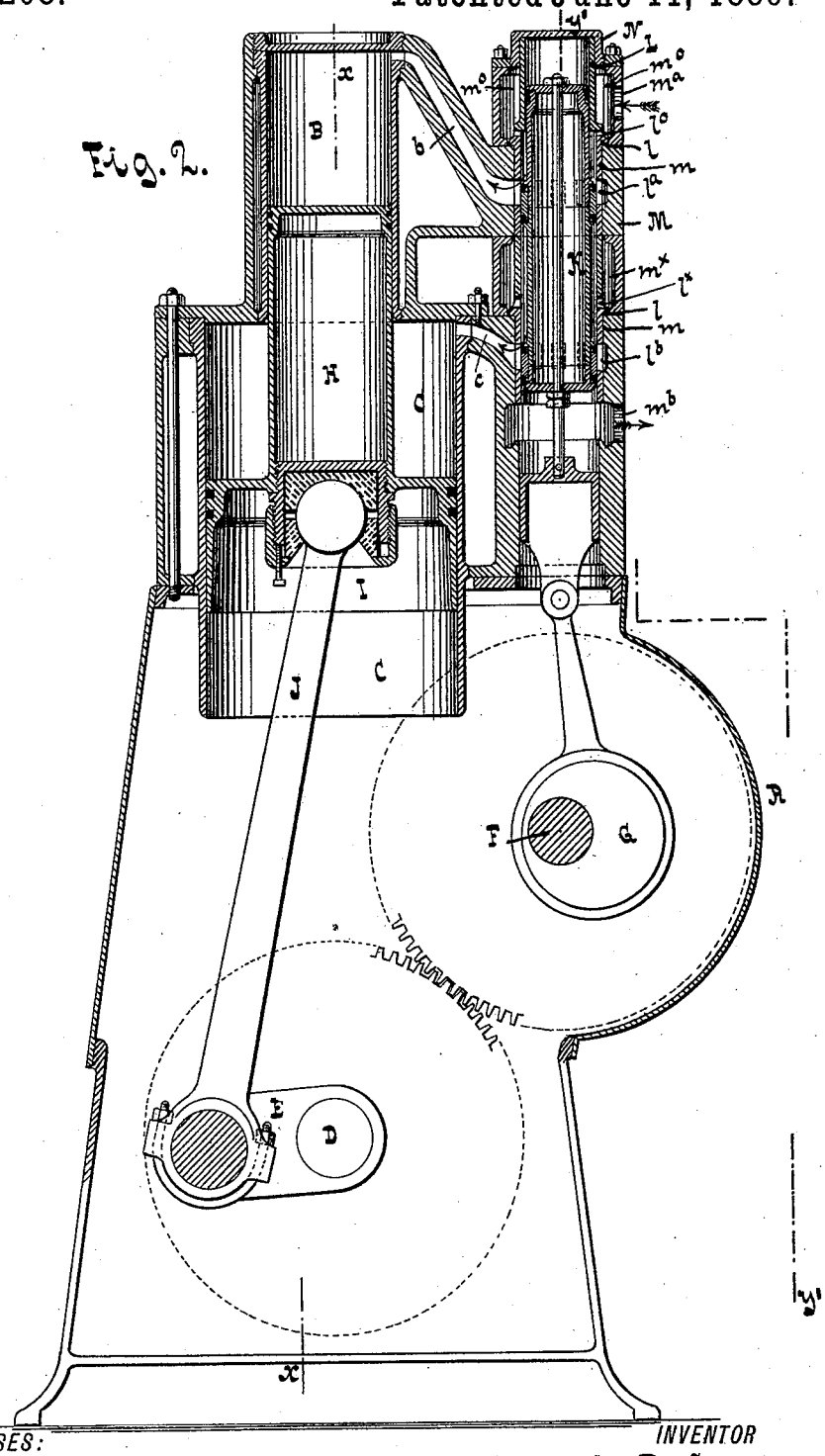

WITNESSES:

A. Faber du Faur jr.
Eduard Wolff.

INVENTOR

Frederick A. Gardner.

BY

Van Santvoord & Hauff

his ATTORNEYS

N. PETERS, Photo-Lithographer, Washington, D. C.

(No Model.) 4 Sheets—Sheet 3.

F. A. GARDNER.

COMPOUND STEAM ENGINE.

No. 405,208. Patented June 11, 1889.

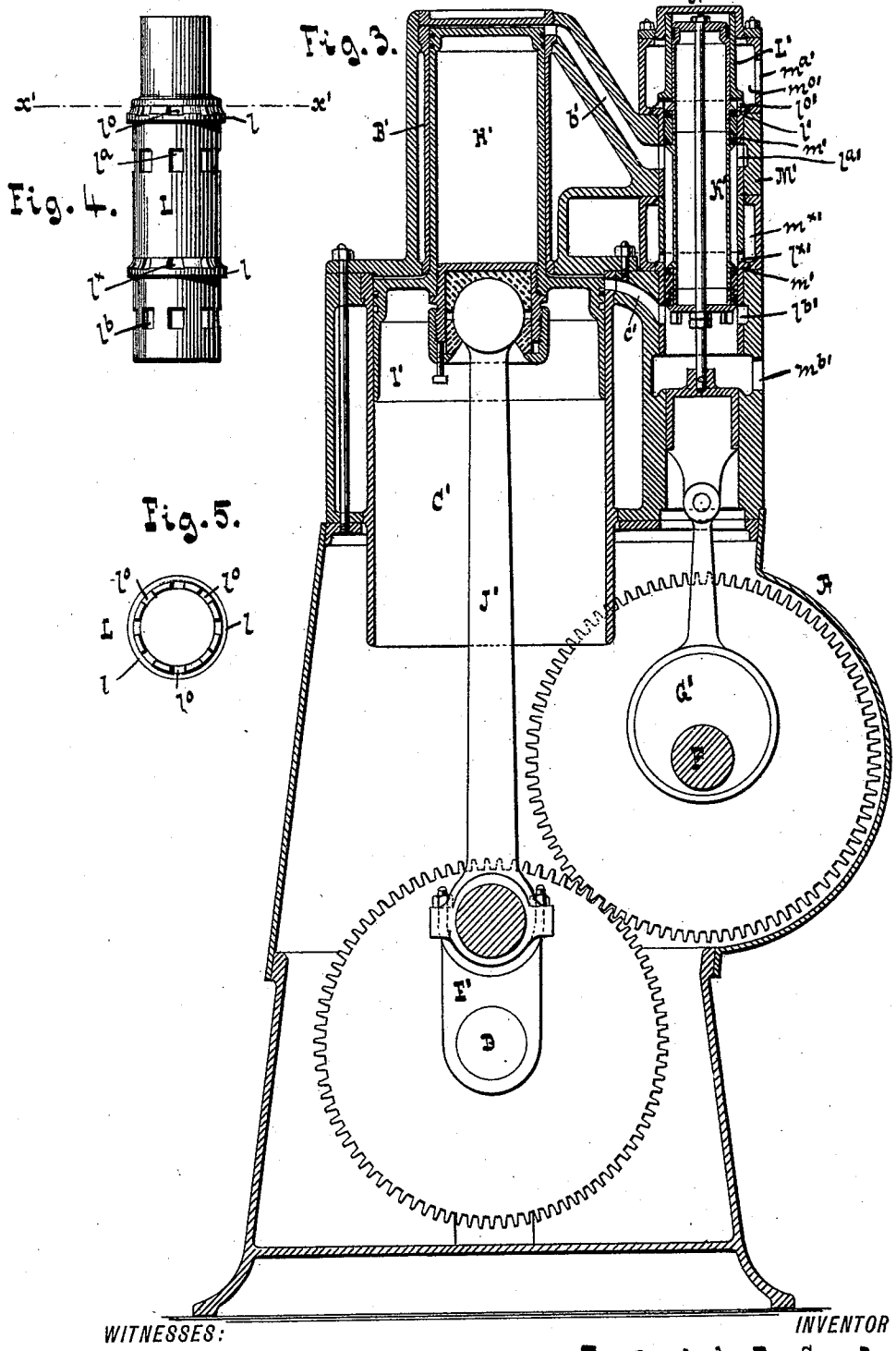

WITNESSES:

A. Faber du Faurf.
Eduard Wolff.

INVENTOR

Frederick A. Gardner.

BY

Van Santvoord & Hauff

his ATTORNEYS

N. PETERS, Photo-Lithographer, Washington, D. C.

(No Model.) 4 Sheets—Sheet 4.

F. A. GARDNER.

COMPOUND STEAM ENGINE.

No. 405,208. Patented June 11, 1889.

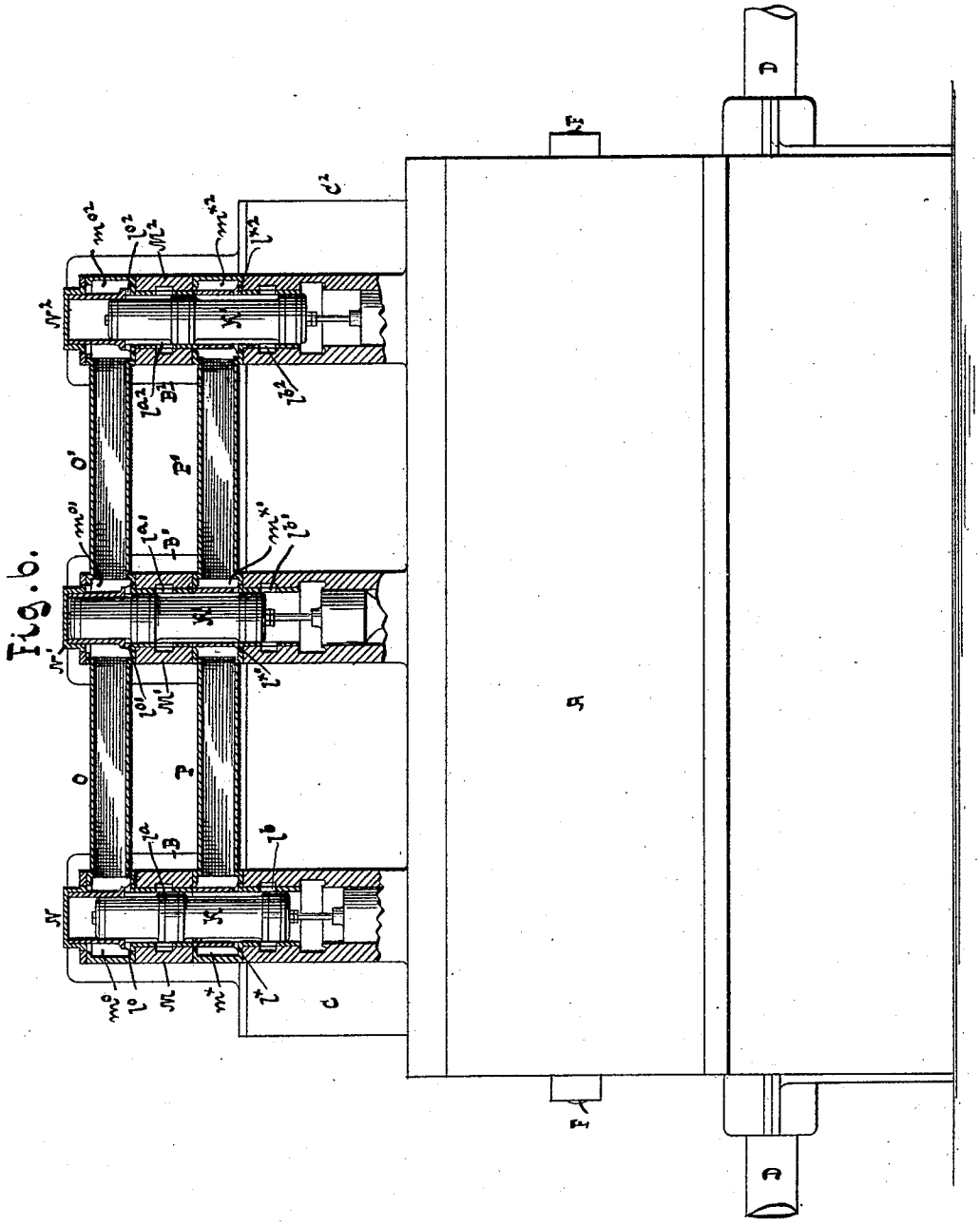

Fig. 6.

WITNESSES:

A. Faber du Faure

Eduard Wolff.

INVENTOR

Frederick A. Gardner.

BY

Van Santvoord & Hauff

ATTORNEYS

N. PETERS, Photo-Lithographer, Washington, D. C.

UNITED STATES PATENT OFFICE.

FREDERICK A. GARDNER, OF CATSKILL, NEW YORK, ASSIGNOR TO F. A. GARDNER & CO., OF SAME PLACE.

COMPOUND STEAM-ENGINE.

SPECIFICATION forming part of Letters Patent No. 405,208, dated June 11, 1889.

Application filed September 6, 1888. Serial No. 284,704. (No model.)

To all whom it may concern:

Be it known that I, FREDERICK A. GARDNER, a citizen of the United States, residing at Catskill, in the county of Greene and State of New York, have invented new and useful Improvements in Compound Steam-Engines, of which the following is a specification.

This invention relates to certain improvements in compound steam-engines, said improvements being set forth in the following specification and claim, and illustrated in the accompanying drawings, in which—

Figure 1 represents a longitudinal vertical section in the plane $x\ x$, Fig. 2. Fig. 2 is a transverse vertical section in the plane $y\ y$, Fig. 1, on a larger scale than the previous figure. Fig. 3 is a similar section in the plane $z\ z$, Fig. 1. Fig. 4 is a side elevation of the valve-chamber detached. Fig. 5 is a transverse section of the same in the plane $x'\ x'$, Fig. 4. Fig. 6 is a longitudinal vertical section in the plane $y'\ y'$, Fig. 2.

Similar letters indicate corresponding parts.

In the drawings, the letter A designates a casing or frame for the engine. This engine consists of one or more primary steam-cylinders B B′ B^2 and one or more secondary cylinders C C′ C^2, and each pair of primary and secondary cylinders is provided with its own valve-chamber, valve, and valve-gear. In the example represented by the drawings I have shown an engine with three cylinders; but, as already indicated, my invention is applicable to engines with one, two, or more cylinders.

D is the crank-shaft, which is provided with three cranks E E′ E^2, set at one hundred and twenty degrees toward each other. The crank-shaft D is geared together with a shaft F, on which are mounted the eccentrics G G′ G^2, which impart motion to the steam-valves, as will be presently more fully explained.

In each of the secondary steam-cylinders C C′ C^2 works a piston I I′ I^2, which is provided with an extension H H′ H^2, that forms the piston for the corresponding primary cylinder B B′ B^2, and the pistons H I H′ I′ H^2 I^2 of each pair of primary and secondary cylinders B C B′ C′ B^2 C^2 are connected to one of the cranks E E′ E^2 by a connecting-rod J J′ J^2.

The steam-valves K K′ of the cylinders B C B′ C′ are shown in Figs. 2 and 3; and I will here remark that the steam-valve of the cylinders B^2 C^2, which is illustrated in Fig. 6 of the drawings, is in every respect the same as those of the cylinders B C B′ C′. Said steam-valves K K′ are fitted into cylindrical valve-chambers L L′, detached views of one of which are shown in Figs. 4 and 5. These valve-chambers fit into casings M M′, and they are provided with flanges $l\ l'$, which are depressed upon shoulders $m\ m'$ in said casings by screw-caps N N′. By removing these caps easy access can be had to the valve-chambers and to the valves. The casings M M′ are provided with steam-chambers $m^o\ m^{o'}$ and with storage-chambers $m^*\ m^{*'}$, and they are supplied with steam through ports $m^a\ m^{a'}$, while the steam escapes from the same through the exhaust-ports $m^b\ m^{b'}$. The valve-chambers L L′ are provided with a set of openings $l^o\ l^{o'}$, which communicate with the steam-chambers $m^o\ m^{o'}$, respectively, and they are further provided with another set of openings $l^*\ l^{*'}$, which communicate with the storage-chambers $m^*\ m^{*'}$, respectively. In said valve-chambers are also formed two sets of apertures $l^a\ l^{a'}$ and $l^b\ l^{b'}$, respectively, the apertures $l^a\ l^{a'}$ being in communication with ports $b\ b'$, respectively, which lead into the primary steam-cylinders B B′, while the apertures l^b $l^{b'}$ communicate with ports $c\ c'$, respectively, which lead into the secondary cylinders C C′. The steam-chambers $m^o\ m^{o'}\ m^{o2}$ of the several cylinders are connected by channels O O′, (see Fig. 6,) and the storage-chambers $m^*\ m^{*'}\ m^{*2}$ by channels P P′.

If the engine has only one cylinder, (in which case a heavy fly-wheel must be used,) the primary cylinder B receives steam as soon as the valve K reaches the position shown in Fig. 2, and when the piston has completed its downstroke and is carried up by the action of the fly-wheel the steam from the primary cylinder exhausts into the storage-chamber m^* as soon as the valve K in its upward movement opens the communication between the port b and the storage-chamber, as will be readily understood by inspecting Fig. 3. When the piston on its next downstroke reaches the position shown in Fig. 2, live steam passes into

the primary cylinder B and the exhaust-steam contained in the storage-chamber m^* passes into the secondary cylinder C, so that the secondary piston I is exposed to the action of the exhaust-steam and the power of the engine is increased.

If the engine has two or more cylinders, the steam-chambers m^0 $m^{0\prime}$ m^{02} and the storage-chambers m^* $m^{*\prime}$ m^{*2} of which are connected and practically form a common storage-chamber, as already explained, the exhaust-steam from each cylinder passes into this common storage-chamber, and each primary piston, when brought into the position shown in Fig. 2, is exposed to the action of live steam, while at the same time the corresponding secondary cylinder is exposed to the action of the exhaust-steam from the common storage-chamber. At the same time, as soon as the crank F′, Fig. 3, has passed its upper center the primary piston H′ of the cylinder B′ is exposed to the pressure of the exhaust-steam contained in the common storage-chamber, so that power is obtained from the pistons H I and also from the piston H′.

By providing a storage-chamber common to two or more cylinders I am enabled to produce more power than can be done in a multiple-cylinder compound engine in which no storage-chamber common to all the cylinders is provided.

What I claim as new, and desire to secure by Letters Patent, is—

In a steam-engine, the combination, with a series of primary and secondary steam-cylinders, their pistons, and a valve-chamber for each pair of cylinders, said valve-chamber provided with two ports leading one into the primary and the other into the secondary cylinder, of a casing surrounding each valve-chamber and provided with inlet and exhaust ports, a live-steam chamber and a storage-steam chamber formed in each of said casings and communicating with the inclosed valve-chamber, channels connecting the live-steam chambers and the storage-steam chambers of the several valve-chamber casings, and a valve located in the valve-chamber of each pair of primary and secondary cylinders for controlling communication between said cylinders and the live-steam chamber, storage-steam chamber, and exhaust-port, substantially as described.

In testimony whereof I have hereunto set my hand and seal in the presence of two subscribing witnesses.

FREDERICK A. GARDNER. [L. S.]

Witnesses:
JOSEPH HALLOCK,
HENRY D. SHORES.