Nov. 14, 1961 J. J. MANCUSI, JR 3,008,479

VALVES

Filed Feb. 10, 1959

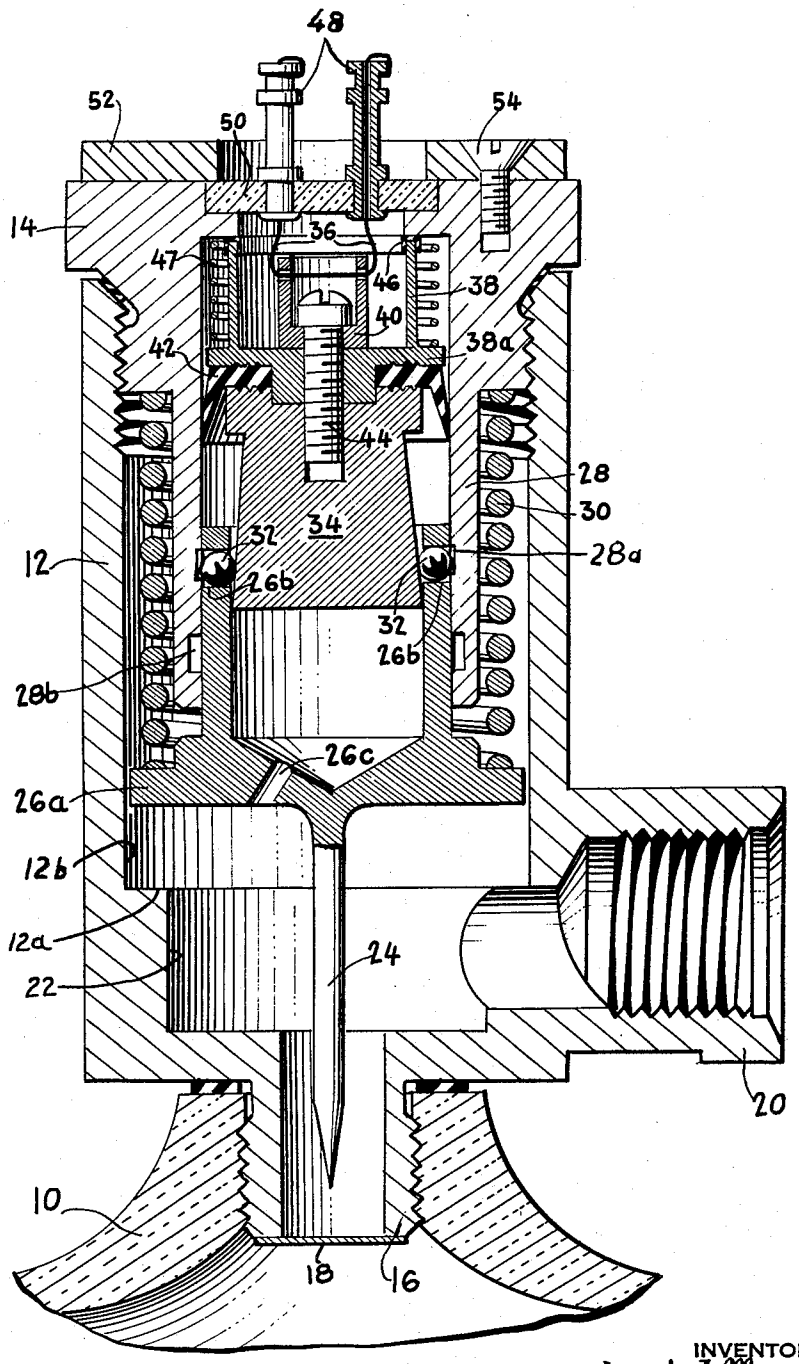

INVENTOR
Joseph J. Mancusi, Jr
BY
Joseph B. Taffhorn
ATTORNEY

United States Patent Office 3,008,479 Patented Nov. 14, 1961

3,008,479
VALVES

Joseph J. Mancusi, Jr., Eastchester, N.Y., assignor to Altair, Inc., Terryville, Conn., a corporation of New York

Filed Feb. 10, 1959, Ser. No. 792,352
1 Claim. (Cl. 137—68)

This invention relates to valves and more particularly to valves of the seal piercing type.

Present day high performance aircraft and missiles use high pressure gas storage containers as primary and emergency sources of fluid power. Because of the exceedingly high pressures in these containers and the long storage periods, valves for control of the flow of this gas must afford a more positive seal than can be attained through normal methods of flow sealing. To accomplish this, the approach previously taken has involved rupture of a metallic member through the action of an explosive charge against a piston. Such operation is dangerous and dependent upon the storage life of the explosive charge under vastly varying conditions.

The object of this invention is to improve the reliability and afford safer operation.

Applicant has devised a valve wherein a solid disc is ruptured by a piercing needle upon the closure of an electrical circuit which burns a fuse wire in two. The burning of the fuse wire enables a biased spring to unlock a valve element which is then driven down by a strong spring to cause the piercing needle carried by it to rupture the disc.

These and other objects, features, and advantages of the invention will be apparent from a reading of the following description when considered with the drawing which discloses by way of example a preferred embodiment of the invention in vertical cross-section.

The valve is shown as being mounted on top of a container or bottle **10** which would contain a gas, such as air, under exceedingly high pressure.

The valve is comprised of a main body **12** and an end plug **14** threaded into the upper open end of the body **12** which generally defines a vertical cylinder. The lower end of the body carries a suitable male inlet fitting **16** across the end of which is suitably affixed, as by welding, a metal disc **18** of such dimension as to be able to withstand the high pressures obtaining in a container **10** while being readily rupturable when the valve is actuated. The inlet fitting **16** may be threaded into the upper end of the bottle **10**.

Projecting laterally from the lower end of the valve body **12** is a female outlet fitting **20**. The inlet and outlet ports of the valve are thus near each other and the free flow of gas from the bottle is expedited through a chamber **22** formed in the lower end of the valve body **12** and with which each of the ports communicates directly.

As observed earlier, the valve releases the gas in the bottle **10** by rupturing the disc **18**. To this end, a piercing needle **24** is fixed to the underside of a hollow, cylindrical valve element **26** slidably mounted within a tubular guide **28** depending from the end plug **14**. A heavy compression spring **30** surrounds the tubular guide and reacts between the end plug **14** and a laterally extending flange **26***a* to provide the driving force whereby the valve element **26** is impelled to carry the piercing needle **24** through the rupturable seal **18**.

The valve element is, however, normally retained in the retracted position of the drawing by a locking mechanism. This mechanism includes a pair of locking balls **32** respectively carried in diametrically disposed openings **26***b* formed in the upper end of the cylindrical valve element **26**. These balls normally cooperate with a groove

28*a* cut in the interior surface of the fixed tubular guide **28**. It can be seen that when the balls are forcibly held so as to protrude into the groove **28***a*, the valve element **26** carrying the piercing needle **24** will be restrained from undergoing movement because of the bias of the spring **30** and thus piercing the disc seal **18**.

The locking balls **32** are forcibly held in the groove **28***a* by conical cam block **34** slidably disposed within the cylindrical valve element **26**. The cam block **34** is part of an integral assembly held in an upper position by an unburnt fuze wire **36**. The assembly includes a cylindrical release carriage **38**, a fuze wire anchor **40**, and an inverted U-cup seal **42**. The components of the assembly are all held together by a screw **44** which passes through openings in the fuze wire anchor **40** and the release carriage **38** and is threadedly received at its lower end in the upper end of the conical cam block **34**. The inverted U-cup seal **42** is clamped between the cam block **34** and the release carriage **38**.

As has been noted, the unburnt fuze wire **36** holds the assembly in the upper position wherein the conical cam block **34** holds the balls **32** in their protruded locking position. This upper position is determined by the engagement of the upper end of the release carriage with the underside of the end plug **14**. A rubber U-channeled ring **46** caps the upper end of the release carriage **38** to provide the cushion against which the fuze wire **36** may be tightly drawn during assembly to eliminate free play within the valve mechanism. In this upper position, a releasing spring **47** disposed about the release carriage **38** so as to be compressed between the end plug **14** and a flange **38***a* on the release carriage.

The fuze wire **36** passes through two diametrically opposed openings in the upper end of the fuze anchor **40**. The ends of the fuze wire pass to the exterior of the valve through two electrical terminals **48** suitably secured in openings formed in a terminal plate **50** extending across a central opening in the end plug **14**. This plate and hence the terminals are fixedly held in place by an overlying securing plate **52** affixed to the upper surface of the end plug **14** by screws **54**. Any suitable source of electrical current would be appropriately connected to the two fuze terminals **48**.

When current of appropriate amperage is passed through the fuze wire **36**, it burns in two. This releases the integral assembly and the release spring **47** drives it downward, downward movement of the conical cam block **34** within the cylindrical valve element **26** being accommodated by a vent **26***c* in the lower end of the valve element. At some point in this downward travel, the surface of the conical cam block **34** will have receded to where the locking balls **32** may be forced out of the groove **28***a* in the tubular guide **28** by the action of the compression spring **30** upon the valve element **26**. As soon as these locking balls clear the groove **28**, the valve element **26** will have been unlocked and will be hurled downward under continued action of the valve spring **30**. This will cause the piercing needle to be punched through the disc seal **18**, thereby rupturing the seal and allowing the gas under high pressure in the container **10** to flow upward through the inlet fitting **16** into the chamber **22** and then out through the outlet fitting **20**.

With the arrival of gas under pressure in the chamber **22**, there will of course be a force acting against the lower end of the valve element **26** tending to drive it upward ilke a piston. Now the valve element may have been driven downward by the valve spring **30** until it abutted the shoulder **12***a* formed in the body **12** by the chamber **22**. In this abutting position, the ball carrying openings **26***b* are aligned with a groove **28***b* formed in the interior surface of the guide **28**. The groove **28***b* is of such size

as to receive the balls 32 sufficiently to allow the conical cam block 34 to move therepast. Such action will occur because the gas pressure in the chamber 22 will be transmitted through the vent 26c against the lower end of the conical cam block 34 to drive it upward. Such action takes place before the valve element 26 can be driven upwardly because the release spring 47 is now exerting little or no force upon the integral assembly. The assembly will move upward until the cushion ring abuts the end plug 14 and a gas seal will obtain at this point because of the Teflon U-cup seal 42. With the establishment of the seal, there will be no active forces upon the valve element 26 so that it may remain in its abutting position with the shoulder 12a because of the bias of the spring 30. The piercing needle 24 will be protruding into the ruptured disc 18.

In operation, the valve works as follows: When the gas under pressure in the container 10 is to be utilized, a suitable electrical circuit including the terminals 48 and the fuze wire 36 would be closed to burn the fuze wire in two. This enables the release spring 47 to drive the integral assembly downwards to where the balls 32 may move completely out of the grooves 28a. This, in turn, enables the valve spring 30 to drive the valve element 26 downwards so that the piercing needle 24 ruptures the metal disc 18 to release the gas in the container 10. Gas now flows upward through the inlet fitting 16, through the valve chamber 22, and out of the valve through the outlet port 20 and on to the fluid pressure system in which it is to be employed.

In addition, the gas moves upward through the vent 26c to drive the integral assembly upward into a position abutting the end plug 14. Escape of gas through the central openings in the end plug is prevented by the inverted Teflon cup seal 42. It is possible that the valve element 26 will be driven upwards initially upon the rupturing of the metal disc 18; however, it eventually stabilizes in a downward position. Whether it is displaced after disc rupture or not, and what final position it eventually assumes, are not critical. The ruptured disc will pass sufficient gas whether the piercing needle remains in a penetrated position or not. In fact it is not necessary to provide the groove 28b in the guide 28, for if the balls 32 are unable to move outwardly sufficiently to clear the conical cam block 34, the entire set of movable parts including the integral assembly and the valve element will be driven upward until the assembly engages the end plug.

It can be seen that applicant has devised a valve embodying a seal that is so positive that its perfectness is determined only by the permeability limits of the metal or other material employed in the disc 18. Furthermore, a most reliable way of controlling the release of bottled gas has been created. Moreover, a valve that is safe from being operated by jarring has been obtained for the tensile strength of the fuze wire can be designed to safeguard the valve against all the rough handling that can occur in normal operation.

Applicant has disclosed a preferred embodiment of the invention. It is apparent that the invention may be embodied in other and different embodiments. Accordingly, it is intended to be limited only by the scope of the appended claim.

What is claimed is:

In a valve, a housing having a flow passage therethrough and means for controlling fluid flow through said flow passage and a guide, a valve element coacting with said means and slidably mounted in said guide for movement from a first to a second position to cause said means to adjust fluid flow, spring means biasing the valve element to move from its first to its second position, a groove in said guide, an opening in said element that is aligned with the groove when the element is in its first position, a ball in said opening, a conical cam block slidably mounted in the valve element and operative in its home position to hold said ball in said element opening so that the ball projects into said groove and prevents said spring means from moving said valve element from its first position, second spring means biasing said conical cam block from its home position, and a fuze wire holding said cam block in its home position.

References Cited in the file of this patent

UNITED STATES PATENTS

824,935	Jenczewsky	July 3, 1906
1,065,169	Owrey	June 17, 1913
2,417,374	Morton	Mar. 11, 1947
2,586,248	Newman	Feb. 19, 1952
2,638,106	Shiels	May 12, 1953
2,697,538	Seeler	Dec. 21, 1954
2,950,022	Boyer	Aug. 23, 1960