(12) PATENT **(11)** Application No. **AU 199658728 B2**
(19) AUSTRALIAN PATENT OFFICE **(10)** Patent No. **711768**

(54) Title
Contraceptive transcervical fallopian tube occlusion devices having mechanical fallopian tube attachment

(51)[6] International Patent Classification(s)
A61F 006/06

(21) Application No: **199658728** (22) Application Date: **1996.05.21**

(87) WIPO No: **WO96/40024**

(30) Priority Data

(31) Number	(32) Date	(33) Country
08/475252	**1995.06.07**	**US**

(43) Publication Date : **1996.12.30**
(43) Publication Journal Date : **1997.02.20**
(44) Accepted Journal Date : **1999.10.21**

(71) Applicant(s)
Conceptus, Inc.

(72) Inventor(s)
Julian Nikolchev; Dai Ton

(74) Agent/Attorney
SPRUSON and FERGUSON,GPO Box 3898,SYDNEY NSW 2001

(56) Related Art
GB 2211095
CN 1047447
US 3805767

OPI DATE 30/12/96 APPLN. ID 58728/96
AOJP DATE 20/02/97 PCT NUMBER PCT/US96/07486

AU9658728

(PCT)

(51) International Patent Classification 6 :
A61F 6/06

A1

(11) International Publication Number: WO 96/40024

(43) International Publication Date: 19 December 1996 (19.12.96)

(21) International Application Number: PCT/US96/07486

(22) International Filing Date: 21 May 1996 (21.05.96)

(30) Priority Data:
08/475,252 7 June 1995 (07.06.95) US

(60) Parent Application or Grant
(63) Related by Continuation
US 475,252 (CON)
Filed on 7 June 1995 (07.06.95)

(71) Applicant *(for all designated States except US)*: CONCEPTUS, INC. [US/US]; 1021 Howard Avenue, San Carlos, CA 94070 (US).

(72) Inventors; and
(75) Inventors/Applicants *(for US only)*: NIKOLCHEV, Julian [US/US]; 251 Durazno Way, Portola Valley, CA 94028 (US). TON, Dai [US/US]; 1693 Flickinger Avenue, San Jose, CA 95131 (US).

(74) Agents: BARRISH, Mark, D. et al.; Townsend and Townsend and Crew L.L.P., 8th floor, Two Embarcadero Center, San Francisco, CA 94111-3834 (US).

(81) Designated States: AL, AM, AT, AU, AZ, BB, BG, BR, BY, CA, CH, CN, CZ, DE, DK, EE, ES, FI, GB, GE, HU, IS, JP, KE, KG, KP, KR, KZ, LK, LR, LS, LT, LU, LV, MD, MG, MK, MN, MW, MX, NO, NZ, PL, PT, RO, RU, SD, SE, SG, SI, SK, TJ, TM, TR, TT, UA, UG, US, UZ, VN, ARIPO patent (KE, LS, MW, SD, SZ, UG), Eurasian patent (AM, AZ, BY, KG, KZ, MD, RU, TJ, TM), European patent (AT, BE, CH, DE, DK, ES, FI, FR, GB, GR, IE, IT, LU, MC, NL, PT, SE), OAPI patent (BF, BJ, CF, CG, CI, CM, GA, GN, ML, MR, NE, SN, TD, TG).

Published
With international search report.

(54) Title: CONTRACEPTIVE TRANSCERVICAL FALLOPIAN TUBE OCCLUSION DEVICES HAVING MECHANICAL FALLOPIAN TUBE ATTACHMENT

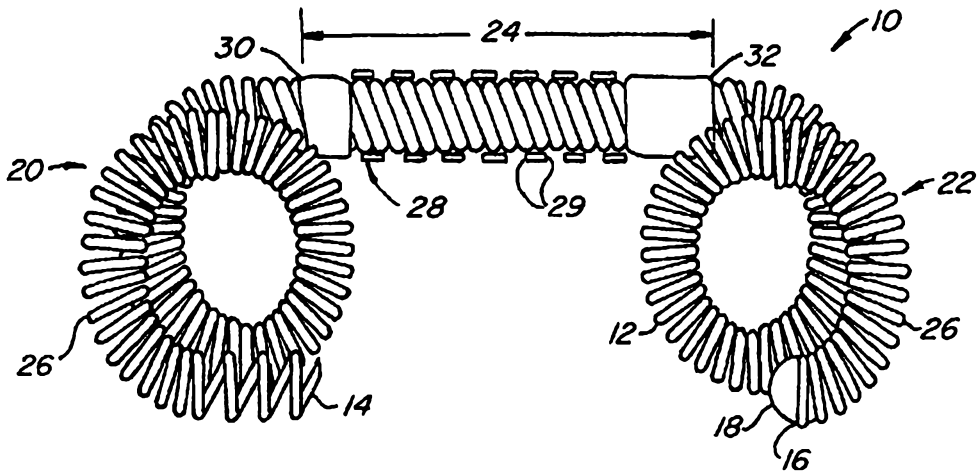

(57) Abstract

The invention provides intra-fallopian devices and non-surgical methods for their placement to prevent conception. The efficacy of the device (10) is enhanced by forming the structure at least in part from copper or a copper alloy. The device (10) is anchored within the fallopian tube by a lumen traversing region (24) of the resilient structure which has a helical outer surface, together with a portion of the resilient structure which is biased to form a bent secondary shape, the secondary shape having a larger cross section than the fallopian tube. The resilient structure is restrained in a straight configuration and trans-cervical inserted within the fallopian tube, where it is released. Optionally, permanent sterilization is effected by passing a current through the resilient structure to the tubal walls.

CONTRACEPTIVE TRANSCERVICAL FALLOPIAN TUBE OCCLUSION DEVICES HAVING MECHANICAL FALLOPIAN TUBE ATTACHMENT

BACKGROUND OF THE INVENTION

1. Field of the Invention

The present invention relates generally to contraception, and more particularly to intrafallopian contraceptive devices and nonsurgical methods for their delivery.

Worldwide demand exists for safe, effective methods of both contraception and permanent sterilization. Although a variety of contraception and sterilization methods are available, all of the existing methods have limitations and disadvantages. Thus, the need for additional safe, low cost, reliable methods of contraception and permanent sterilization, both in developed and less developed countries, is widely recognized.

Many presently available contraception methods require significant user involvement, and user non-compliance results in quite high rates of failure. While the theoretical effectiveness of existing contraceptives, including barrier methods and hormonal therapies, is well established, overcoming user noncompliance to improve overall efficacy has proven difficult.

One form of contraception which is less susceptible to user noncompliance is the intrauterine device (IUD). IUDs have been found to have higher rates of reliability, and are effective for a longer period of time, than most other commercially available contraceptives. Unfortunately, IUDs are also associated with serious infectious complications. For this reason, the use of IUDs within the United States has decreased dramatically. Additionally, IUDs are subject to unplanned expulsion, and must be removed due to excessive pain or bleeding in a percentage of cases, further reducing the

acceptance of the IUD as a contraceptive method. Interestingly, the efficacy of copper IUDs appears to be higher than that of non-metallic IUDs. The reason for this has not been fully explained.

Commercially available options for permanent sterilization include fallopian tube ligation and vasectomy. These methods are surgical, are difficult to reverse, and are not available to many people in the world. It is common knowledge that fertilization occurs in the fallopian tubes where the sperm and ovum meet. Tubal ligation avoids this by complete occlusion of the fallopian tubes.

It has previously been proposed to reversibly occlude the fallopian tubes, for example, by *in vitro* formation of an elastomeric plug, or otherwise anchoring a device on either side of the narrowest region of fallopian tube, called the "isthmus." Such fallopian tube occlusion methods appear promising; however, an unacceptably high percentage of the non-surgical devices proposed to date have become dislodged during previous studies. Even where non-surgical intrafallopian devices have remained in place, they have been found to be only moderately effective at preventing conception.

For these reasons, it would be desirable to provide effective, reliable intrafallopian devices for contraception and sterilization. It would be particularly desirable to provide highly effective intrafallopian devices which did not require surgery for placement. It would be especially desirable if such devices and methods allowed easy placement of the device, but were less susceptible to being dislodged than previously proposed non-surgical intrafallopian devices.

2. Description of the Related Art

The experimental use of a stainless steel intrafallopian device is described in *Transcatheter Tubal Sterilization in Rabbits*, Penny L. Ross, RT 29 "Investigative Radiology", pp. 570-573 (1994). The experimental use of an electrolytically pure copper wire as a surgical contraceptive intrafallopian device in rats was described in "Antifertility

Effect of an Intrafallopian Tubal Copper Device", D.N. Gupta, 14 *Indian Journal of Experimental Biology*, pp. 316-319 (May 1976).

U.K. Patent Application Pub. No. 2,211,095 describes a uterine screw plug for blocking the fallopian tube. European Patent Application Pub. No. 0,010,812 describes a device for placement in the oviducts having enlargements at either end for anchoring the device. The same device appears to be described in Netherlands Patent No. 7,810,696.

The use of tubal occlusion devices is described in "Hysteroscopic Oviduct Blocking With Formed-in-Place Silicone Rubber Plugs", Robert A. Erb, Ph.D., *et al., The Journal of Reproductive Medicine,* pp. 65-68 (August 1979). A formed-in-place elastomeric tubal occlusion device is described in U.S. Patent No. 3,805,767, issued to Erb. U.S. Patent No. 5,065,751, issued to Wolf, describes a method and apparatus for reversibly occluding a biological tube. U.S. Patent No. 4,612,924, issued to Cimber, describes an intrauterine contraceptive device which seals the mouths of the fallopian tubes.

German Patent No. 28 03 685, issued to Brundin, describes a device for plugging a body duct with a device which swells when in contact with a body fluid.

Alternative contraceptive devices are disclosed in copending Patent Application Publication No. WO 96/40024, the full disclosure of which is herein incorporated by reference.

Summary of the Invention

The present invention provides intrafallopian devices and methods for their placement to prevent conception. The intrafallopian devices of the present invention are transcevically delivered and mechanically anchored within the fallopian tube to provide long term contraception, or alternatively permanent sterilization, without the need for surgical procedures or the risks of increased bleeding, pain, and infection associated with intrauterine devices (IUDs).

AUSTRALIAN PATENT OFFICE

The intrafallopian devices of the present invention generally comprise a structure having a lumen-traversing region with a helical outer surface. The helical surface is mechanically anchored by a resilient portion of the structure which is biased to form an enlarged secondary shape, preferably forming distal and proximal anchoring loops. The anchoring loops help prevent the helical outer surface from rotating out of position, and also directly deter axial motion within the fallopian tube.

The use of copper in the intrafallopian device of the present invention improves its efficacy as a contraceptive method. Devices formed from plastically deformable materials, however, are less readily restrained in the fallopian tube. Apparently, the large variation in the actual shape and dimensions of fallopian tubes does not provide reliable anchoring for a pre-formed deformable intrafallopian device. The intrafallopian device of the present invention therefore comprises a resilient structure, usually a metallic coil, which includes a copper alloy or plating, ideally comprising an alloy including at least 75% copper. The coil material typically includes beryllium, zinc, stainless steel, platinum, a shape memory alloy, such as Nitinol™, or the like. Preferably, the coil is composed of an alloy of beryllium and copper. Although the present device will generally result in occlusion, it need not completely occlude the fallopian tube to prevent the meeting of the sperm and ovum. Instead, the presence of the copper on the resilient structure is sufficient to provide effective contraception.

Conveniently, the present invention further comprises non-surgical placement of such intrafallopian devices by transcervical introduction. The resilient structure is restrainable in a straight configuration, e.g., by use of a corewire, greatly facilitating and reducing the risks of introduction. Thus, the cost and dangers associated with existing surgical contraceptive and sterilization procedures are avoided.

In a first aspect, an intrafallopian contraceptive device according to the present invention comprises a proximal anchor having a proximal cross-section;

a distal anchor having a distal cross-section, the distal anchor restrainable in a narrow configuration having a smaller cross-section than the distal cross-section for insertion into a fallopian tube; and

an axially flexible lumen-traversing region extending between the proximal anchor and the distal anchor, the lumen traversing region having a helical outer surface adapted to engage the tubal wall of the fallopian tube so as to prevent inadvertent expulsion of the device.

Preferably, the lumen-traversing region comprises a resilient structure, generally having a ribbon wound over the outer surface to form the helical shape. Anchoring is enhanced by a sharp outer edge on the ribbon. As described above, at least one of the proximal anchor, the distal anchor, and the lumen-traversing region preferably comprises copper. The proximal and distal anchors generally comprise a resilient structure biased to form an enlarged secondary shape, thereby allowing the device to be restrained in a straight configuration to facilitate transcervical introduction.

In another embodiment, a contraceptive intrafallopian device according to the present invention comprises a primary coil having a proximal loop, a distal loop, and an intermediate straight section between the loops. A helical ribbon is wound over at least a portion of the intermediate section, forming a helical surface to mechanically anchor the device within the fallopian tube.

The ribbon of the present intrafallopian device generally protrudes sufficiently to firmly engage the tubal wall. Preferably, the ribbon has a width in the range between 0.127 mm and 2.54 mm, a thickness in the range between .0254 mm and 5.08 mm, and a pitch in the range between 0.254 mm and 5.08 mm. The overall device geometry preferably facilitates introduction and retention, but is not large or rigid enough to interfere with internal tissue movements. Usually, the device has a length in the range between 1.5 cm and 7.5 cm when in a relaxed state, while the distal loop and the proximal loop have outer diameters of at least 3 mm. Preferably, the primary coil has an outer diameter in the range between .2 mm and 5 mm.

In a second aspect, an intrafallopian contraceptive system according to the present invention comprises a primary coil having a distal end, a proximal end, a coil axis there between, an intermediate section therebetween, and an axial lumen from the proximal end to near the distal end;

a helical ribbon wound over at least a portion of the intermediate section about the axis; and

a corewire removably disposed within the lumen of the primary coil, the corewire supporting the primary coil in an axially straight configuration.

The corewire restrains the primary coil in a straight configuration, facilitating transcervical introduction. Optionally, the corewire is threadably received by the primary

AUSTRALIAN PATENT OFFICE

coil. Alternatively, a release catheter is slidably disposed over the corewire proximally of the primary coil to restrain the primary coil while the corewire is withdrawn proximally from the fallopian tube.

The helical ribbon is anchored in the fallopian tube by the distal and proximal loops. The ribbon is set in the tubal wall while the device is restrained in a straight configuration over a corewire by torquing on the corewire. Withdrawing of the corewire then releases the anchors. The distal anchor is generally inserted into the ampulla, distal of the isthmus, while the proximal anchor is located in the ostium. These anchors prevent rotation of the device, and also help avoid axial movement.

In a third aspect, a method of intrafallopian contraception according to the principles of the present invention comprises supporting a primary coil having a coil axis in an axially straight configuration with a corewire extending into an axial lumen of the coil, the coil including a lumen-traversing region having a helical outer surface;

transcervically introducing the supported coil into a target region of a fallopian tube; and

engaging the supported lumen traversing region against the lumen wall;

withdrawing the corewire from within the introduced coil to mechanically anchor the coil within the fallopian tube.

The resilient structure is mechanically anchored within the fallopian tube, a portion of the resilient structure assuming an enlarged secondary shape which is larger in cross-section than the fallopian tube. Optionally, an electric current is applied through the resilient structure to the fallopian tube, thereby effecting permanent sterilization.

A fourth aspect of the present invention comprises a method of intrafallopian sterilisation comprising transcervically introducing a structure into a target region of a fallopian tube, the structure being releasably attached to a distal end of an elongate body;

applying an electrical current through the elongate body to the structure, and through the structure to the fallopian tube to permanently anchor the structure within the fallopian tube; and releasing the structure from the elongate body and withdrawing the elongate body.

A fifth aspect of the present invention provides an intrafallopian contraceptive device comprising:

a proximal anchor;

a distal anchor which is adapted for insertion into a fallopian tube, and which is capable of imposing resilient anchoring forces against an inner surface of a tubal wall; and

a lumen-traversing region extending between the proximal anchor and the distal anchor, the lumen traversing region comprising means for affixing the intrafallopian contraceptive device to the adjacent tubal wall while the device is restrained within the fallopian tube by the proximal and distal anchors.

AUSTRALIAN PATENT OFFICE

A sixth aspect of the present invention provides an intrafallopian contraceptive device comprising:

a proximal anchor having a resilient coil which is restrainable in a straight configuration for insertion into a fallopian tube, and which is capable of imposing resilient anchoring forces against an inner surface of a tubal wall;

a distal anchor having a resilient coil which is restrainable in a straight configuration for insertion into the fallopian tube, and which is capable of imposing resilient anchoring forces against the inner surface of the tubal wall; and

a lumen-traversing region extending between the proximal and distal anchors, the lumen-traversing region comprising a resilient structure having a helical outer surface which is adapted to engage the inner surface of the tubal wall so as to prevent expulsion of the intrafallopian contraceptive device while the proximal and distal anchors impose the anchoring forces.

A seventh aspect of the present invention provides a method of intrafallopian contraception comprising:

transcervically introducing a pre-formed resilient structure having a coiled configuration into a target region of a fallopian tube;

imposing an anchoring force against a tubal wall of the fallopian tube by resiliently engaging an inner surface of the tubal wall with the resilient structure; and

affixing the resilient structure within the fallopian tube with a lumen-traversing region of the resilient structure.

Brief Description of the Drawings

Fig. 1 illustrates a first embodiment of a contraceptive intrafallopian device according to the present invention.

Fig. 2 illustrates a primary coil used in the contraceptive intrafallopian device of Fig. 1.

Fig. 3 illustrates a secondary coil which has been imposed on a primary coil as used in the contraceptive intrafallopian device of Fig. 1.

Fig. 4 illustrates a corewire for use with the contraceptive intrafallopian device of Fig. 1.

Fig. 5 is a cross-sectional view of a contraceptive delivery system having the contraceptive intrafallopian device of Fig. 1.

Fig. 6 illustrates an alternative embodiment of the present contraceptive intrafallopian device.

Fig. 7 illustrates a primary coil used in the contraceptive intrafallopian device of Fig. 6.

Fig. 8 schematically illustrates a contraceptive delivery system including the contraceptive intrafallopian device of Fig. 6.

AUSTRALIAN PATENT OFFICE

Figs. 9 and 10 illustrate a method of delivery of a contraceptive intrafallopian device according to the present invention.

Detailed Description of the Specific Embodiment

The present invention encompasses a contraceptive intrafallopian device which can alternatively be used as both a permanent and a reversible means of contraception. The present contraceptive methods and devices minimize the danger of non-use which has limited the efficacy of prior art contraceptive techniques. Moreover, the location of the present devices within the fallopian tubes provides a reduced risk of the infectious complications, increased bleeding, and

AUSTRALIAN PATENT OFFICE

pelvic pain associated with intrauterine devices (IUDs). The location and the novel shape of the present intrafallopian device provides significant advantages over IUDs, which have been found to be susceptible to unplanned expulsion and removal due to excessive pain and bleeding. The present invention takes advantage of the increase in effectiveness associated with copper IUDs, providing a resilient structure including copper which may be transcervically positioned without the need for surgery.

Although the present contraceptive method is included within a group of contraceptive techniques generally referred to as fallopian tube occlusion methods, the present invention does not necessarily rely solely on blocking the fallopian tube to prevent fertilization. Instead, contraception is apparently provided by disrupting of ovum transport, the process of fertilization, and/or cleavage of the ovum. While the effect that copper has on these processes is not fully understood, it does appear that copper intrafallopian devices offer potentially significant increases in effectiveness over intrafallopian devices formed of other materials. Optionally, the present invention further encompasses devices which promote the growth of tissue within the tube to induce tubal occlusion, further inhibiting conception.

Conveniently, the present resilient structures are adapted to be releasably affixed over a corewire, the corewire restraining the resilient structure in a straight configuration. As the resilient structure has an outer diameter when in the straight configuration which is less than the inner diameter of the fallopian tube, the catheter containing the present intrafallopian device is easily transcervically introduced.

The present invention is anchored within the isthmus of the fallopian tube, overcoming the unintended expulsion of the device and the resulting failure of the contraceptive method. Such intrafallopian device expulsion has been the single greatest factor limiting the efficacy of easily positioned intrafallopian contraceptive techniques. The

present intrafallopian devices are generally elongate resilient structures pre-formed into secondary shapes. These secondary shapes will preferably form anchors proximally and distally of the narrowest portion of the fallopian tube, called the isthmus. The secondary shape must have a larger outer diameter than the inner diameter of the isthmus.

The present device is generally readily removed by snaring the resilient structure near the proximal end and pulling proximally on the resilient structure, thereby straightening the resilient structure and allowing it to be withdrawn without injuring the fallopian tube. Alternatively, an electrical current is applied to the device after it is positioned within the fallopian tube, providing permanent sterilization.

Referring now to Fig. 1, a first embodiment of the present contraceptive intrafallopian device 10 is formed from a resilient primary coil 12. Primary coil 12 has a proximal end 14 and a distal end 16, the latter having an atraumatic endcap 18. Primary coil 12 further includes three portions: a proximal anchor portion 20, a distal anchor portion 22, and a lumen-traversing region 24. Proximal and distal anchors 20,22 are biased to form anchoring loops 26, as described hereinbelow.

Lumen-traversing region 24 comprises a substantially straight portion of primary coil 12. A ribbon 28 is wound over the outer surface of primary coil 12 to provide a helical shape. Ribbon 28 includes sharp outer edges 29, which firmly anchor lumen-traversing region 24 in the fallopian tube wall when torque is applied to intrafallopian device 10. The ribbon is preferably formed of a high strength biocompatible metal, ideally being stainless steel. The ribbon is attached to primary coil 12 at a proximal joint 30 and a distal joint 32, which may be formed of solder, heat-shrink tubing, or the like.

Referring now to Fig. 2, primary coil 12 is most easily formed in a straight configuration as a cylindrical coil or spring, preferably having an outer diameter in the range from .005 inch to .05 inch, and having a length in the

range from 20mm to 150mm. Ideally, primary coil 12 has an outer diameter in the range from .01 inch to .05 inch and a length in the range from 30mm to 125mm.

Preferably, primary coil 12 is formed from a beryllium copper alloy wire. Beryllium copper provides the resilience necessary to avoid expulsion of the device, and also provides the increased effectiveness of a copper contraceptive intrafallopian device. Such a beryllium copper wire will typically have a diameter from .002 inch to .01 inch. To provide the increased efficacy of a copper intrafallopian device, primary coil 12 preferably comprises an alloy including 75% copper. Alternatively, primary coil 12 is formed from a resilient metal, such as stainless steel, platinum, a shape memory alloy, or the like. If such materials are used, primary coil 12 is preferably plated with copper or a copper alloy or otherwise has copper attached.

Primary coil 12 includes a body winding 42 and a thread winding 44. Body winding 42 is formed with the minimum possible pitch to increase the stiffness of primary coil 12. Thread winding 44 will typically comprise from 0.1cm to 2cm adjacent to proximal end 14, and will have a pitch roughly twice that of body winding 42.

Referring now to Fig. 3, the proximal and distal anchors are formed by imposing a bent secondary shape on selected portions of primary coil 12. The secondary shape preferably comprises loops 26 formed by bending primary coil 12, and heat treating the primary coil while it is bent. A wide variety of secondary shapes may be used, including sinusoidal curves, alternating loops, or loops separated by straight sections so as to form a "flower coil", as more fully described in copending Patent Application Publication No. WO 96/40024 the full disclosure of which is herein incorporated by reference. In all cases, the bent secondary shape should have an outer cross-section 46 which is larger than the fallopian tube to provide effective anchoring.

Referring now to Fig. 4, a corewire 50 for use with intrafallopian device 10 (Fig. 1) comprises a resilient wire

AUSTRALIAN PATENT OFFICE

52 which tapers towards a distal end 54. Wire 52 is sufficiently stiff to restrain intrafallopian device 10 in a straight configuration, typically comprising stainless steel, platinum, or the like. A short section of coil forms corewire threads 56 attached at threadjoint 58. Threads 56 match the windings and pitch of threadwindings 44 of primary coil 12.

Referring now to Fig. 5, an intrafallopian contraceptive system 60 comprises corewire 50 inserted within a lumen 62 through intrafallopian device 10. Intrafallopian device 10 is releasably attached by engaging thread windings 44 with threads 56. Thus, intrafallopian device 10 is disengaged by torquing a proximal end of corewire 50 once intrafallopian device 10 is in position.

Referring now to Fig. 6, an alternative embodiment of the present intrafallopian device is again formed from a resilient primary coil 112 having a proximal end 114 and a distal end 116. The former includes a friction fitting 115. Primary coil 112 again includes three portions: a proximal anchor portion 120, a distal anchor portion 122, and a lumen-traversing region 124. Proximal and distal anchors 120, 122 are here biased to form opposed anchoring loops 26, thereby increasing the relaxed overall cross-section of the proximal and distal anchors. A ribbon 128 is wound over the outer surface of primary coil 112 to provide a helical shape, as described above.

Referring now to Fig. 7, primary coil 112 comprises a uniform body winding 142. The secondary shape is imposed on the straight cylindrical coil as opposed loops 126, or alternatively as multiple loops of a flower coil.

Referring now to Fig. 8, an intrafallopian contraceptive system using alternative intrafallopian device 100 includes a corewire 152 which tapers towards a distal end 154. Friction fitting 115 fittingly engages corewire 152, which restrains primary coil 112 in a straight configuration. A release catheter 164 is slidably disposed over corewire 152 proximally of alternative intrafallopian device 100, allowing the device to be released by withdrawing corewire 152 relative to the release catheter.

Use of the present contraceptive intrafallopian device will be described with reference to Figs. 9 and 10. A uterine introducer canula 70 is inserted transcervically through a uterus 72 to the region of an ostium 74. Alternatively, a hysteroscope may be used in place of canula 70.

Intrafallopian contraceptive system 60 is advanced distally of introducer cannula 70 and manuevered through the fallopian tube, preferably until intrafallopian device 10 extends distally of the isthmus. Optionally, intrafallopian contraceptive system 60 is self-guided, with corewire 52 bent near distal end 54 to assist intraluminal manuevering. Alternatively, a guide wire and catheter are advanced into the fallopian tube first, and the guide wire is replaced with intrafallopian contraceptive system 60. In either case, the intrafallopian device is axially positioned with lumen-traversing region 24 within a target region 84 adjacent to isthmus 80. Preferably, at least one loop of distal anchor 22 is distal of target region 84, and at least one loop of proximal anchor 20 is proximal of target region 84 to form the distal and proximal anchor bends.

Once intrafallopian device 10 is properly positioned, corewire 50 is torqued to set ribbon 28 in the tubal wall. The corewire may then be unthreaded from intrafallopian device 10 by rotating the corewire in the opposite direction, disengaging threads 56 from thread windings 44. The corewire is then free to slide proximally, releasing the primary coil. As the distal end of the primary coil is released, a distal anchor bend 90 is formed. Similarly, a proximal loop forms a proximal anchor bend 92. The anchor bends help to axially restrain the device within the fallopian tube, and also prevent rotation around the helical shape of lumen-traversing region 24. As seen in Fig. 10, the loops need not assume their relaxed form to provide effective distal or proximal anchors.

The present invention further encompasses permanent sterilization by passing a current through the corewire to the intrafallopian device prior to withdrawing the corewire.

Fallopian tube tissue in contact with the intrafallopian device is dessechated, and thus attached to the present intrafallopian device. This action also causes permanent tubal damage, leading to the formation of scar tissue which encapsulates the intrafallopian device and causes permanent occlusion of the tubal lumen. Clearly, the corewire/primary coil interface must be conductive to allow the present non-surgical method of permanent sterilization.

In conclusion, the present invention provides a contraceptive intrafallopian device which may be positioned without surgery. While the above is a complete description of the preferred embodiments of the invention, various alternatives, modifications, and equivalents may be used. For example, a wide variety of secondary shapes, including open loops, continuous bends, sinusoidal curves, or the like, may be imposed on the primary coil. Therefore, the above description should not be taken as limiting the scope of the invention, which is defined instead solely by the appended claims.

The claims defining the invention are as follows:

1. An intrafallopian contraceptive system comprising:

a primary coil having a distal end, a proximal end, a coil axis therebetween, an intermediate section therebetween, and an axial lumen from the proximal end to near the distal end;

a helical ribbon wound over at least a portion of the intermediate section about the coil axis; and

a corewire removably disposed within the lumen of the primary coil, the corewire supporting the primary coil in an axially straight configuration.

2. An intrafallopian contraceptive system as claimed in claim 1, wherein the system comprises copper.

3. An intrafallopian contraceptive system as claimed in any one of claims 1-2 wherein, the helical ribbon has a helical cross-section which is smaller than both cross-sections of the proximal and distal ends.

4. An intrafallopian contraceptive system as claimed in any one of claims 2-3, wherein the primary coil comprises a material selected from the group consisting of beryllium, stainless steel, platinum, and shape memory alloy.

5. An intrafallopian contraceptive system as claimed in claim 1, wherein the corewire is threadably received by the primary coil.

6. An intrafallopian contraceptive system as claimed in claim 1, wherein the ribbon has a width in the range between 0.127mm and 2.54mm, a thickness in the range between .0254mm and 5.08mm, and a pitch in the range between 0.254mm and 5.08mm, and wherein the primary coil has an outer diameter in the range between 0.2mm and 5mm.

7. An intrafallopian contraceptive system as claimed in claim 1, wherein the system has a length in the range between 1.5cm and 7.5cm when in a relaxed state.

8. An intrafallopian contraceptive system as claimed in claim 1, wherein the helical ribbon comprises a helical outer surface which can be embedded into the adjacent tubal wall without perforating the tubal wall.

9. An intrafallopian contraceptive system as claimed in claim 1, wherein the helical ribbon comprises an electrically conductive surface coupleable to the tubal wall so as to promote formation of scar tissues.

10. A method of intrafallopian contraception comprising:

supporting a primary coil having a coil axis in an axially straight configuration with a corewire extending into an axial lumen of the coil, the coil including a lumen-traversing region having a helical outer surface;

transcervically introducing the supported coil into a target region of a fallopian tube; and

engaging the supported lumen traversing region against the lumen wall;

AUSTRALIAN PATENT OFFICE

withdrawing the corewire from within the introduced coil to mechanically anchor the coil within the fallopian tube.

11. A method as claimed in claim 10, wherein at least a portion of the coil assumes a secondary shape which is larger in cross-section than the fallopian tube when the corewire is withdrawn.

12. A method as claimed in claim 10 or claim 11, wherein the target region extends distally of an isthmus of the fallopian tube.

13. A method as claimed in any one of claims 10-12, further comprising torquing the corewire to anchor the coil, the helical shape having a sharp outer edge, and wherein the withdrawing step comprises unthreading the corewire from the coil.

14. A method as claimed in any one of claims 10-13, further comprising applying an electrical current through the coil to the fallopian tube to permanently prevent conception.

15. A method of intrafallopian sterilization comprising the method as claimed in claim 10 further comprising applying an electrical current through the corewire to the coil, and through the coil to the fallopian tube to permanently anchor the coil within the fallopian tube and releasing the coil from the corewire; prior to withdrawing the corewire from within the introduced coil.

16. A primary coil having a coil axis in an axially straight configuration with a corewire extending into an axial lumen of the coil, the coil including a lumen-traversing region having a helical outer surface, when used in the method of intrafallopian contraception as claimed in any one of claims 10-14.

17. A method of intrafallopian contraception comprising:

transcervically introducing a pre-formed resilient structure having a coiled configuration into a target region of a fallopian tube;

imposing an anchoring force against a tubal wall of the fallopian tube by resiliently engaging an inner surface of the tubal wall with the resilient structure; and

affixing the resilient structure within the fallopian tube with a lumen-traversing region of the resilient structure.

18. A preformed resilient structure having a coiled configuration when used in the method of intrafallopian contraception as claimed in claim 17.

19. An intrafallopian contraceptive system, substantially as hereinbefore described with reference to the accompanying drawings.

Dated 24 August, 1999
Conceptus, Inc.

Patent Attorneys for the Applicant/Nominated Person
SPRUSON & FERGUSON

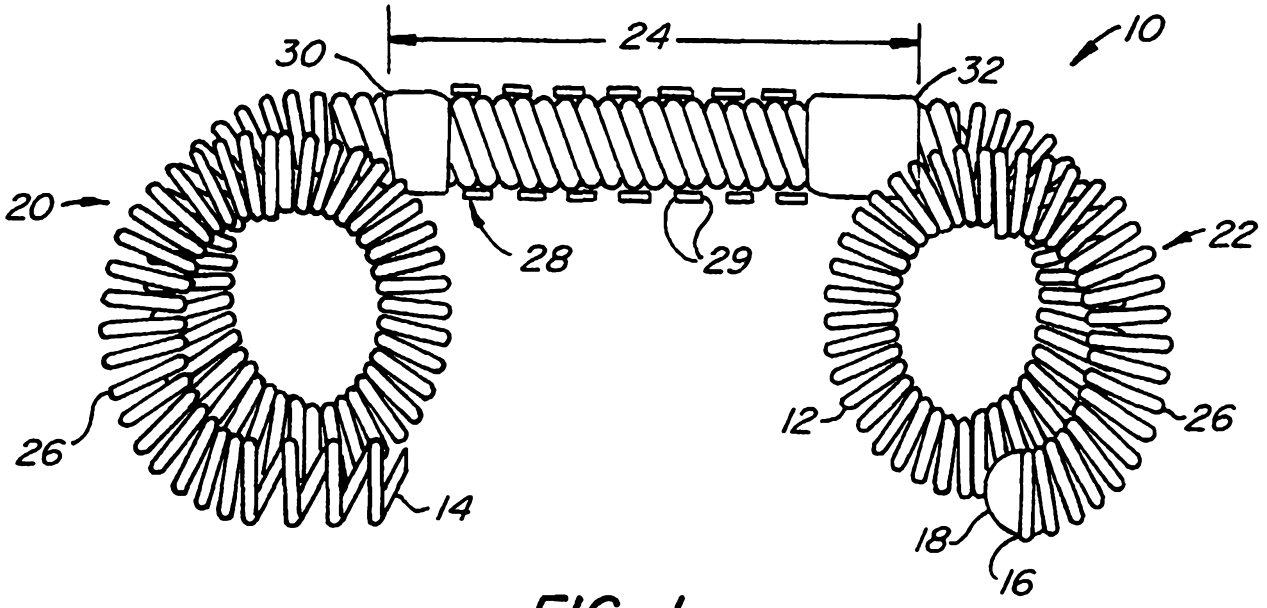

FIG. 1.

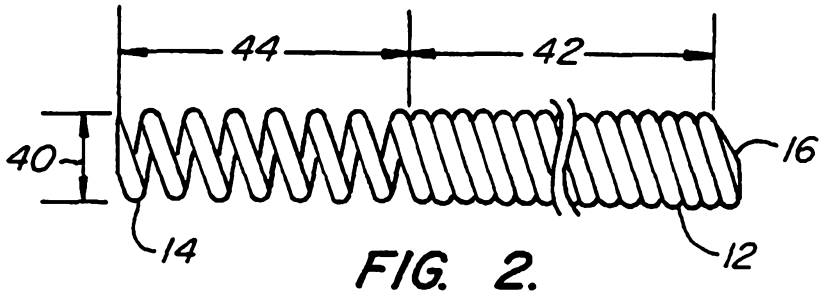

FIG. 2.

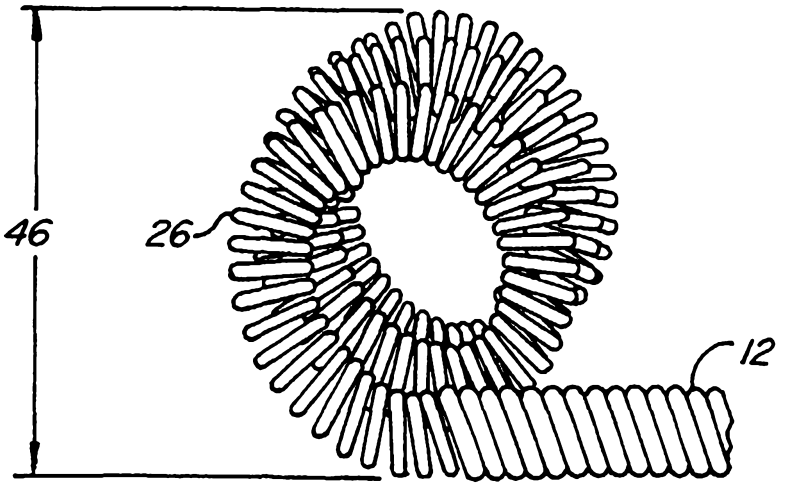

FIG. 3.

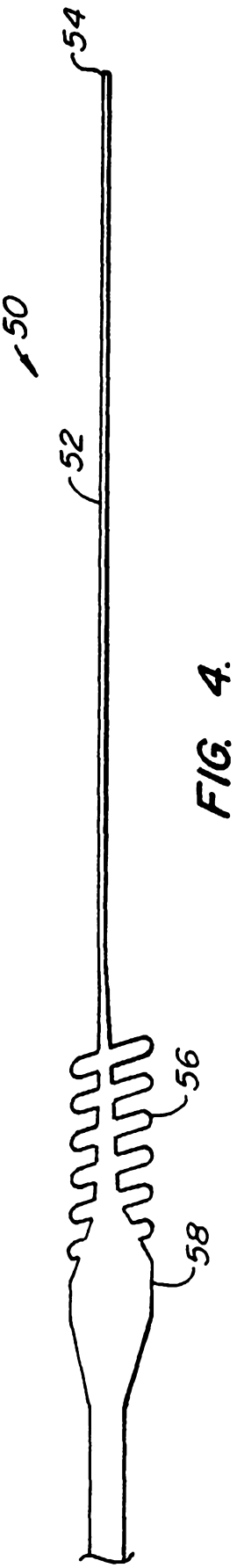

FIG. 4.

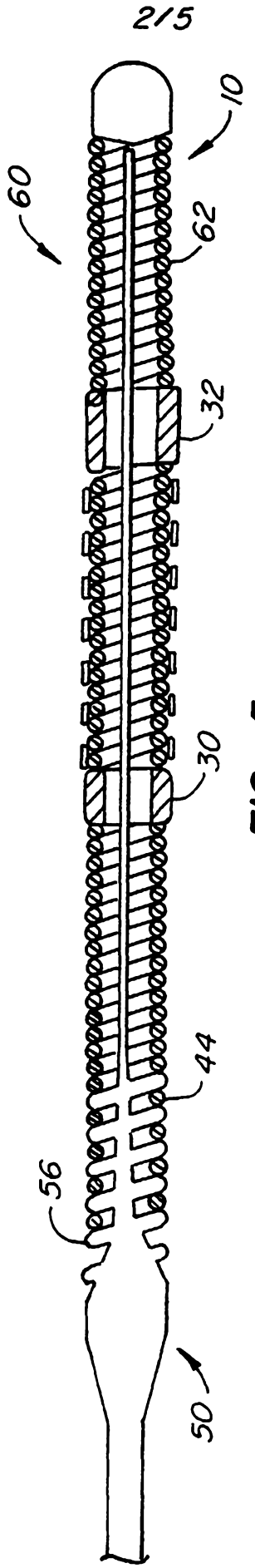

FIG. 5.

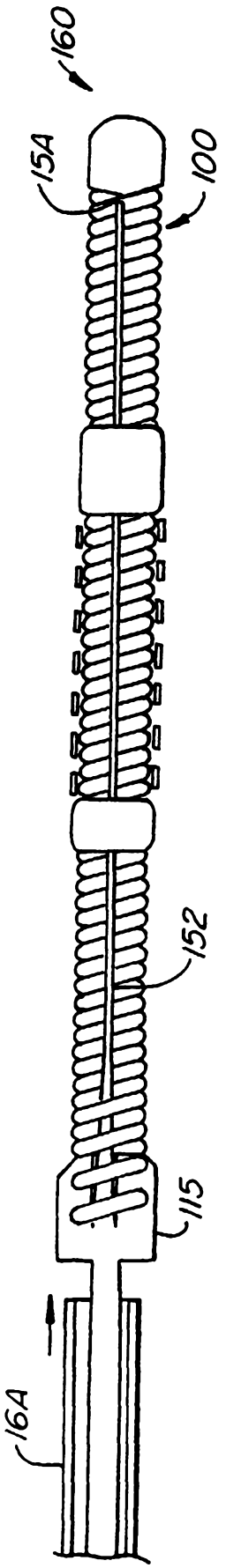

FIG. 8.

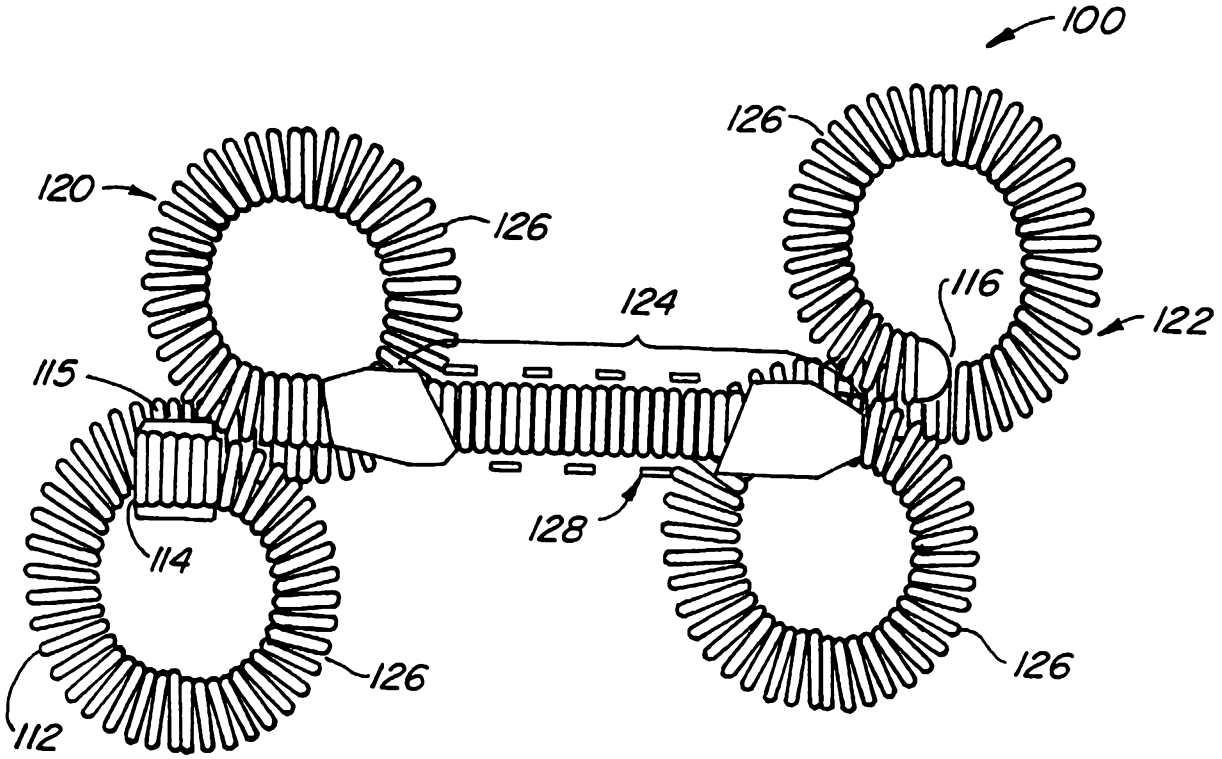

FIG. 6.

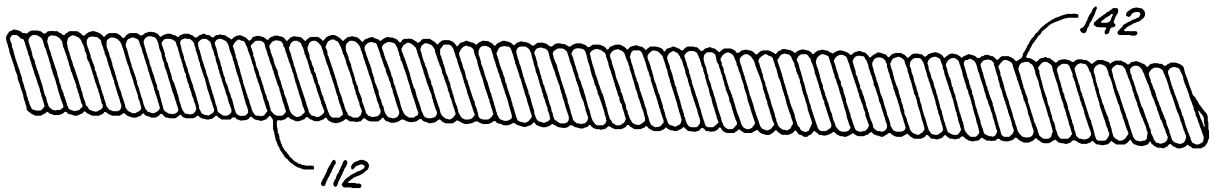

FIG. 7.

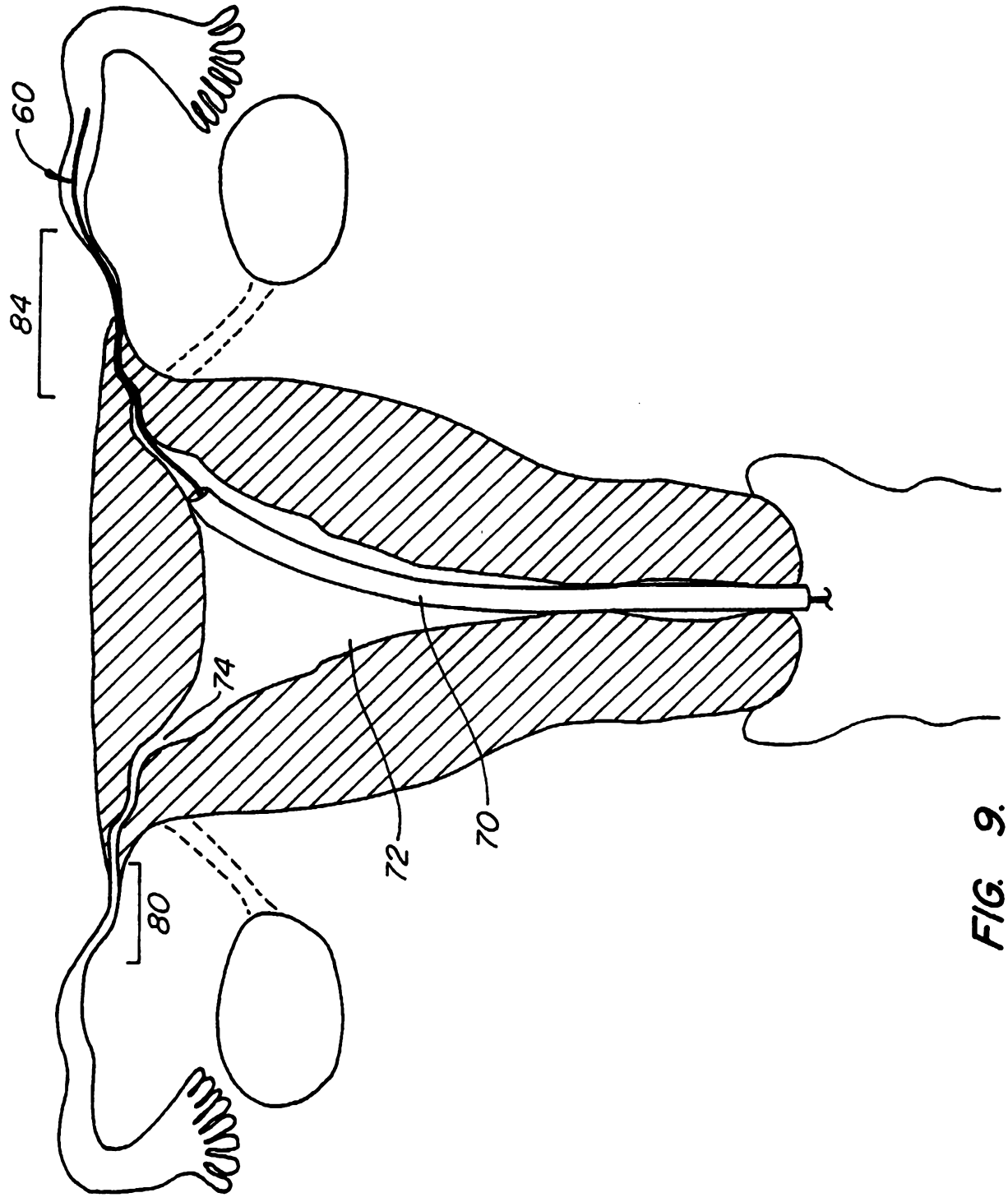

FIG. 9.

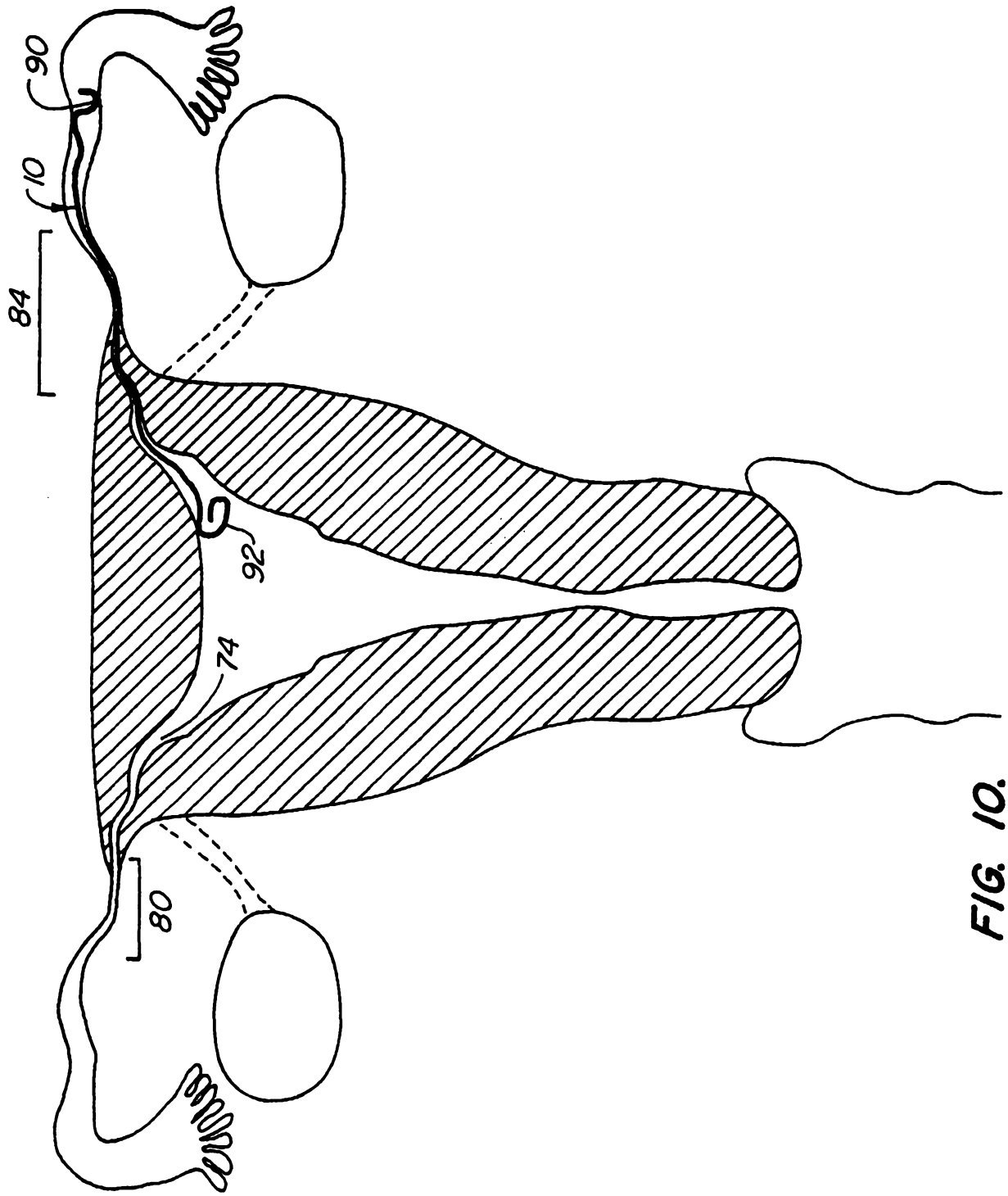

FIG. 10.