(12) UK Patent Application (19) GB (11) 2 084 801 A

(21) Application No **8031451**
(22) Date of filing
30 Sep 1980
(43) Application published
15 Apr 1982
(51) **INT CL³ H01H 3/02**
(52) Domestic classification
H1N 741 PK
(56) Documents cited
GB 2018516A
GB 1375333
GB 1277887
(58) Field of search
H1N
(71) Applicant
Standard Telephones and Cables Limited
190 Strand
London WC2R 1DU
England
(72) Inventor
Peter Bruce Carr
(74) Agents
ITT UK
S R Capsey
Patent Department
Maidstone Road
Foots Cray
Sidcup DA14 5HT
England

(54) Keypad button

(57) A push-button key-pad, such as used in a telephone, consists of a rectangular frame (17) which carries a number of push-buttons (18) each coupled to the frame by a pair of arms (19) in V-form in plan. The arms 19, the frame 17 and the push-buttons 18 may be formed integrally, or the buttons may be separate items fitted to each pair of arms.

Above the frame 17 there is a cover (20) through which the buttons 18 extend, and below the frame 17 there is a rubber (or rubber-like material) dimple pad (15) with switch dimples (16) below each push button.

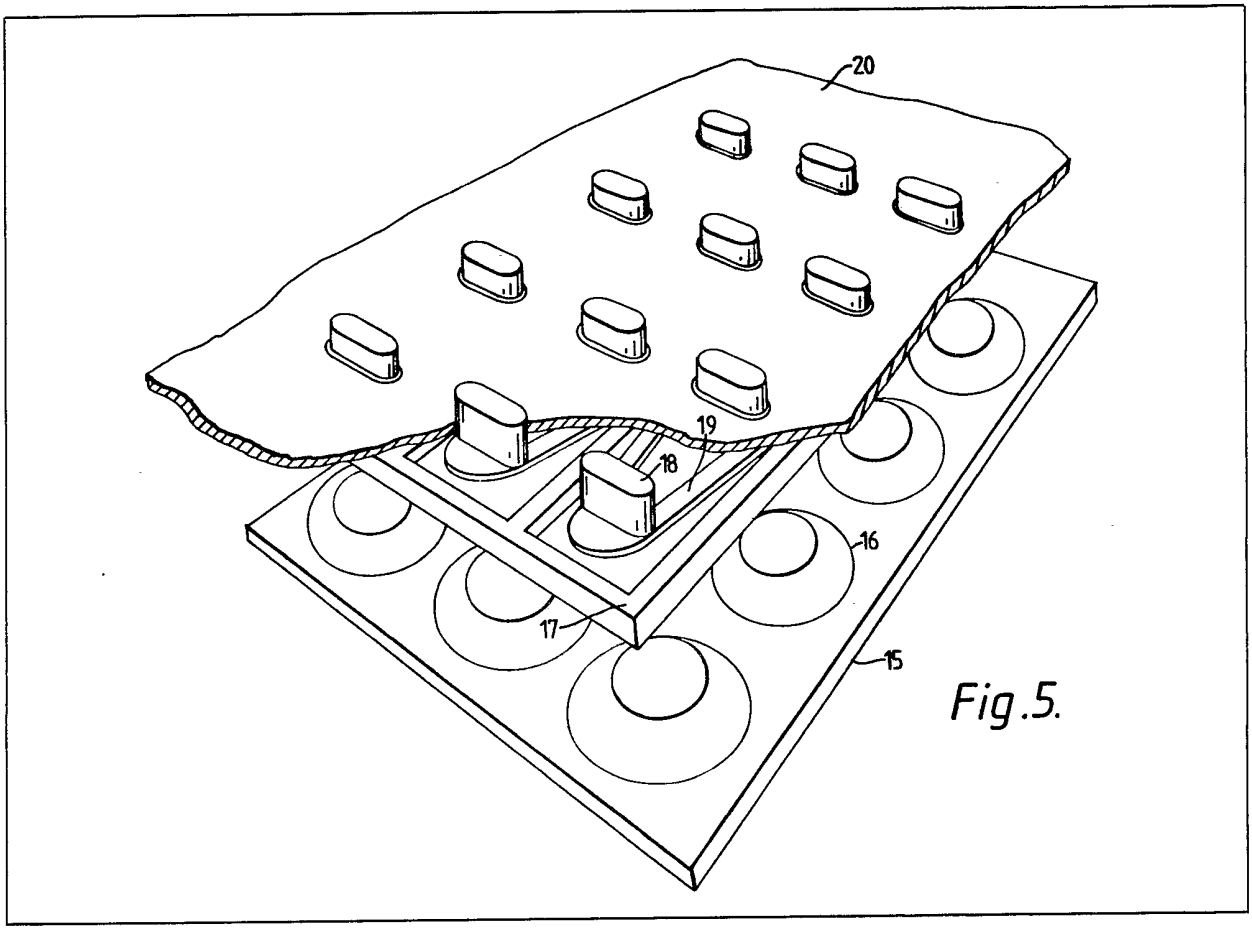

Fig.5.

GB 2 084 801 A

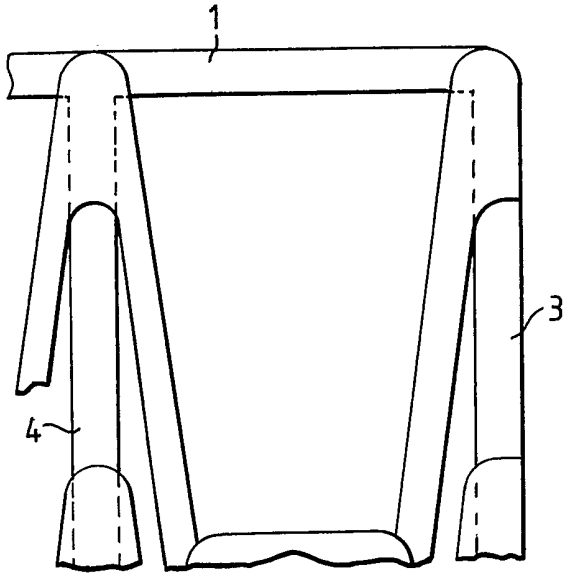

Fig.1.

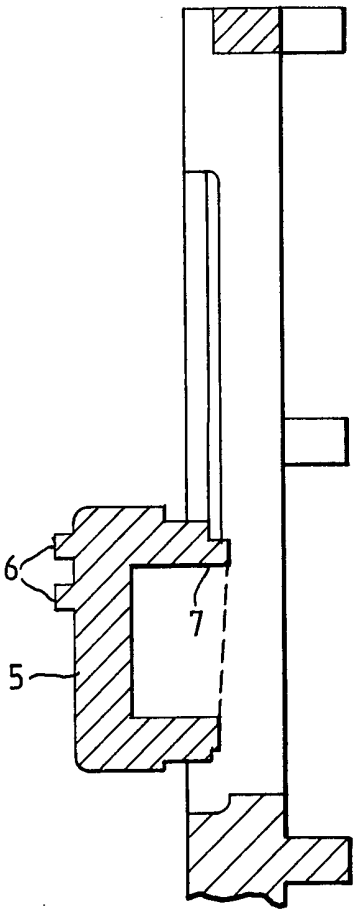

Fig.3.

Fig.2.

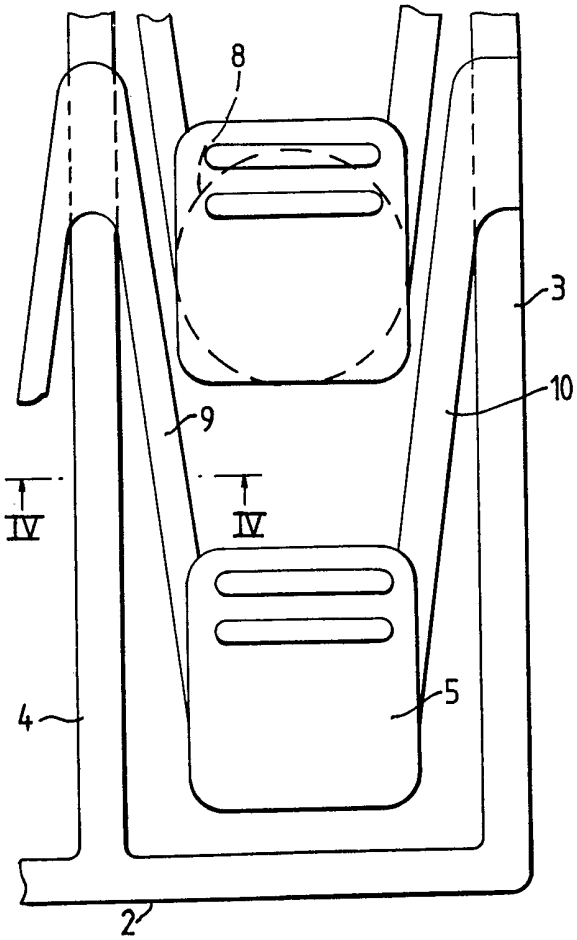

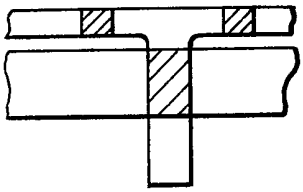

Fig.4.

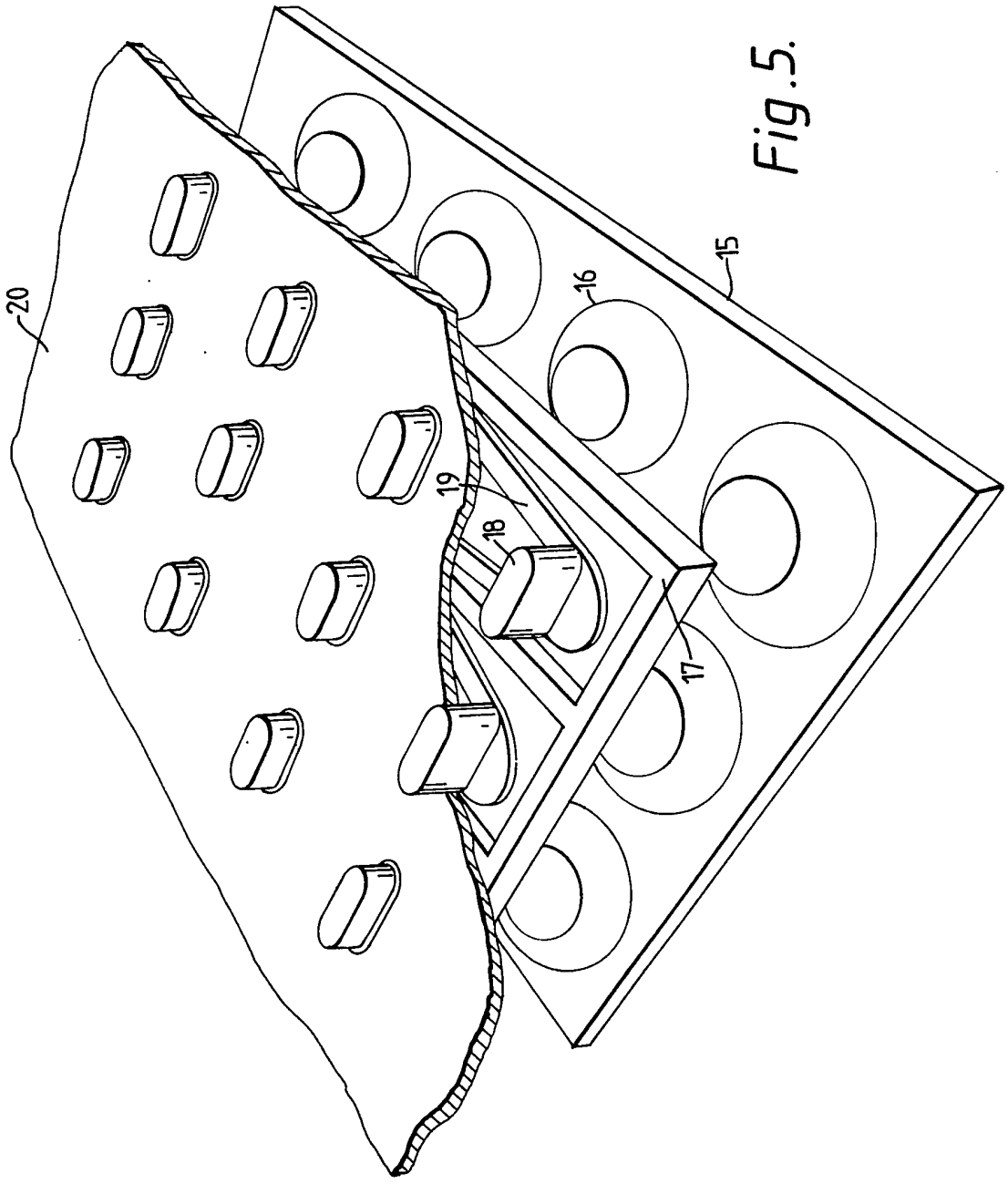

Fig.5.

SPECIFICATION

Keypad button detail

This invention relates to the construction of electrical push-button operated switches, especially but not exclusively for use in telephone instruments.

A recent development in the field of such manually-operable switching is the use of a so-called rubber (or rubber-like material) dimple pad, which is a sheet of the rubber (or rubber-like material) with a dimple per push-button position. Each such dimple is a dome on the sheet surface which has on its concave surface a region of conductive material, e.g. metal or conductive plastics. The dimple pad is located over a sheet of an electrically insulating material having electrically conductive regions on it. When a push button is depressed, its dimple's dome is collapsed so that its conductive region contacts the conductive region on the lower sheet to complete one or more connections. On release of the push-button it restores to rest, assisted by the resilience of the dimple. In the case of a telephone keypad we use a 4 × 3 dimple pad, with a corresponding matrix of conductive tracks on the lower sheet.

An object of the invention is to produce a simple and inexpensive push-button switch using such dimple switches, and to produce a keypad using such push-buttons.

According to the present invention there is provided a push-button switch arrangement which includes a frame-like structure of an electrically-insulating plastics material having a cut-out portion within which at least one push-button is located, the or each said push-button having an up-standing portion which is depressible by a user to operate the arrangement, and two supporting arms each of which extends from one of a pair of sides of the push-button to the frame-like structure, and in which the said arms are each integral with the frame-like structure and are resilient, so that resetting of a depressed push-button when the latter is released by the user is aided by the resilience of said arms.

Embodiments of the invention will now be described with reference to the accompanying drawings in which

Figure 1 is a view from the top of one corner of a one-piece frame which incorporates a number of push-button switches embodying the invention;

Figure 2 is a view similar to Fig. 1 of another corner of the frame;

Figure 3 is a cross-section of a push-button such as that in the corner shown in Fig. 1;

Figure 4 is a cross-section along the line III–III of Fig. 3;

Figure 5 is a perspective view of a further embodiment of the invention.

The arrangements shown in Figs. 1 and 2 is a frame which carries twelve push-buttons arranged in a 4 × 3 co-ordinate matrix. Such arrays are much used as keypads for telephone instruments. The frame has sides 1, 2, interconnected by two more sides only one of which, 3, is shown. In additions lengthwise intermediate strips such as 4 extend between the sides 1, 2.

Each push-button such as 5 has two up-standing ribs 6 and a depending circular portion 7 which fits snugly into a circular portion, indicated at 8, on a push-button support. Integral with this support for a push-button there are arms 9, 10, formed integral with the portion such as 8, and extending to and integral with respective ones of the edges 3 and strips 4. Each pair of arms defines a V with the push-button at the apex.

When a push-button is depressed, it thus pivots about the point at which its arms 9, 10, are formed integral with the edges on strips 3, 4. Due to the resilience of the material, there is some assistance with resetting when the user removes his finger from a depressed button. We now refer to Fig. 5, in which the rubber dimple pad referred to above is shown at 15, this having twelve dimples such as the one indicated at 16. Above the dimple pad we have a one-piece structure 17, which carries the twelve push-buttons such as 18, each coupled to the structure of a pair of arms such as 19. In this case the push-buttons are each integral with the pair of arms, and, unlike the push-buttons of Figs. 1 to 4, each button is "sausage-shaped" in plan. The buttons each extend through a corresponding-shaped hole in a cover plate 20.

In the arrangement shown in Figs. 1 to 4, the ribs 6, see especially Fig. 3, may be omitted if so desired. Further, although the dimple pad has been referred to as having a disc of metal of conductive plastics, this disc could be of a conductive rubber-like material. Further, since only one push-button is operated at once, the sheet and dimples could all be electrically conductive.

An important advantage of the 'A' frame construction described herein is that it enables the use of long support arms which overlap the positions of adjacent buttons. This allows the button to travel through a large radius, producing an action closer to the parallel action at present typical in keypads.

CLAIMS

1. A push-button switch arrangement which includes a frame-like structure of an electrically insulating plastics material having a cut-out portion with which at least one push-button is located, the or each said push-button having an upstanding portion which is depressible by a user to operate the arrangement, and two supporting arms each of which extends from one of a pair of sides of the

push-button to the frame-like structure, and in which the said arms are each integral with the frame-like structure and are resilient, so that resetting of a depressed push-button when the latter is released by the user is aided by the resilience of said arms.

2. A switch arrangement as claimed in claim 1, and in which the or each said push-button is integral with its two arms.

3. A switch arrangement as claimed in claim 1 or 2, and in which the or each push-button co-operates with dome-type switch on a support of insulating material.

4. A push-button switch arrangement substantially as described with reference to Figs. 1 to 4 or Fig. 5 of the accompanying drawings.

NEW CLAIMS (filed on 3rd March 1981 and 1st June 1981)

5. A push-button switch arrangement, which includes a frame-like structure of an electrically-insulating material having a cut-out portion within which the actuating member of the push-button is located, said actuating member having an up-standing portion which is depressible by a user to operate the arrangement, two supporting arms each of which extends from one of a pair of generally parallel sides of the actuating member to the frame-like structure, and contact means located below the actuating member so as to be controllable thereby, in which the two arms extend generally in the same direction but diverging from the actuating member, each said arm being longer than the major dimension of the actuating member, and in which the arms are each integral with the actuating member and the frame-like structure and are resilient, so that resetting of a depressed push-button when the latter is released is aided by the resilience of the arms.

6. A push-button switch matrix which includes an $m \times n$ array of switch arrangements each as claimed in claim 5, the actuating member and the arms of all of the buttons and a single said frame-like structure being formed as a single integral unit.

7. A matrix as claimed in claim 6, and in which the contact means of the switch arrangements are provided by a single layer of insulating material formed with a collapsible dimple per push-button, each said dimple carrying a contact which is brought into engagement with stationary contact means when its button is depressed.

Printed for Her Majesty's Stationery Office
by Burgess & Son (Abingdon) Ltd.—1982.
Published at The Patent Office, 25 Southampton Buildings,
London, WC2A 1AY, from which copies may be obtained.