G. DOBSON.

INSULATOR.

APPLICATION FILED APR. 1, 1908.

900,917. Patented Oct. 13, 1908.

Fig. 1.

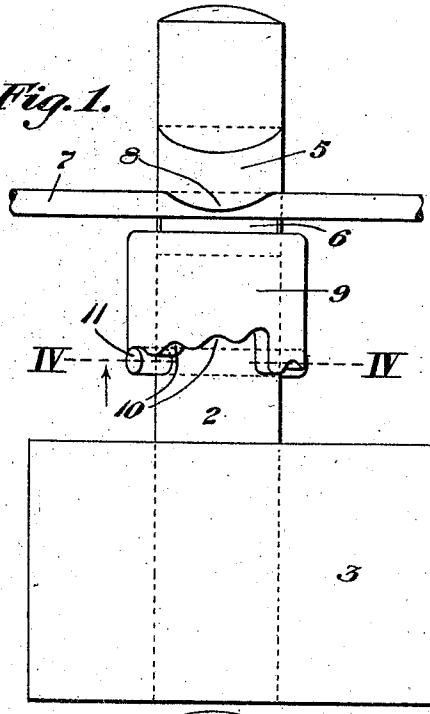

Fig. 2.

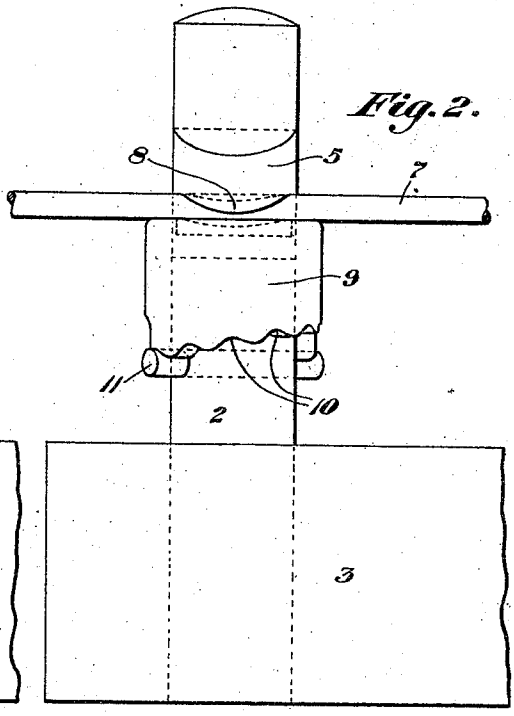

Fig. 3.

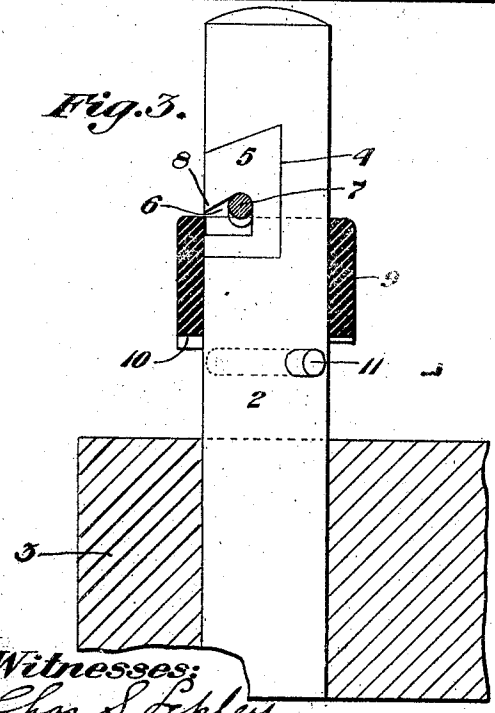

Fig. 4.

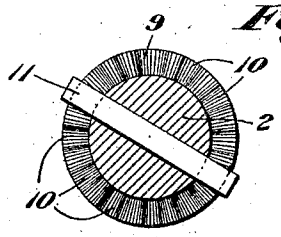

Fig. 5.

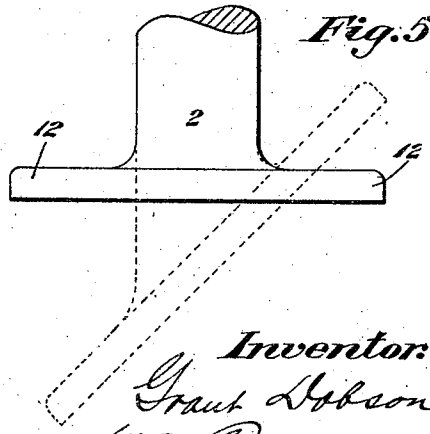

Witnesses:
Chas. S. Lepley.
Henry Sens.

Inventor:
Grant Dobson
by O. M. Clarke
his attorney.

BEST AVAILABLE COPY

UNITED STATES PATENT OFFICE.

GRANT DOBSON, OF PITTSBURG, PENNSYLVANIA, ASSIGNOR OF ONE-HALF TO RICHARD A. OHLOFF, OF PITTSBURG, PENNSYLVANIA.

INSULATOR.

No. 900,917. Specification of Letters Patent. Patented Oct. 13, 1908.

Application filed April 1, 1908. Serial No. 424,561.

To all whom it may concern:

Be it known that I, GRANT DOBSON, a citizen of the United States, residing at Pittsburg, in the county of Allegheny and State of Pennsylvania, have invented certain new and useful Improvements in Insulators, of which the following is a specification, reference being had therein to the accompanying drawing.

My invention refers to improvements in insulators for telegraph, telephone or other current-conducting wires and is designed to provide means for positively gripping and holding the wire between insulating contact elements, so arranged that they may be adjusted to insert or remove the wire, and of small size so as to avoid danger of breakage from the common cause of destruction by the throwing of stones, etc., and provided with means for adjustment to any supporting base.

Referring to the drawings Figure 1 is a view in front elevation of the device showing the wire in position for being gripped by the holding ring. Fig. 2 is a similar view showing the ring turned to holding position. Fig. 3 is a sectional view at right angles to Fig. 1. Fig. 4 is a cross sectional view on the line IV. IV. looking upwardly. Fig. 5 is a detail view showing a modified form of supporting stem.

2 represents a central supporting stem, of metal or any suitable material, adapted to be mounted in an ordinary cross arm 3 of a telegraph or telephone pole by inserting it in a socket therein, or said stem may be provided with any suitable base or flanges as indicated in Fig. 5, whereby it may be bolted or screwed upon any surface.

The upper end of stem 2 is recessed as indicated at 4, providing a holding socket for a block 5 of insulating material as porcelain, fiber, or other suitable substance. The outer portion of block 5 is made cylindrical conforming to the contour of the stem 2, practically forming a continuation of the exterior of the stem, and is provided with a transverse slot or opening 6 adapted to receive the wire 7 crosswise when inserted.

The upper portion of socket 6 preferably extends somewhat upwardly and backwardly from the front upper edge 8 which thus partially covers the wire when in place. The socket 6 is of ample size and opening at the front to admit of the easy insertion of the wire 7 when the holding ring is lowered, as in Fig. 1, while the upward travel of said ring is sufficient to bind it tightly against the wire underneath, causing the wire to kink at each bearing portion, thereby fixedly securing it in locked position.

9 is the ring referred to, encircling stem 2, and may be of porcelain, fiber, or other suitable insulating material and provided upon its lower edges with one or more series of serrations 10 with intervening shoulders. Said serrations and shoulders are arranged sloping or spirally, while one or more studs 11 which may be in the form of a pin, are inserted crosswise through the stem 2, and are so arranged that when the ring 9 is rotated, the serrations 10 will ride over the studs 11 and will interlock therewith when the upper edge of the ring has been forced into sufficiently tight engagement against the wire to positively clamp it.

The ring 9 may be made cylindrical as shown and is capable of being turned with the fingers or a pipe wrench, or it may be provided with lugs or flat faces around its surface for engagement by an ordinary nut wrench.

The device may be made in any desired design or proportions, and when mounted in any other manner than that shown the base of stem 2 may be provided with flanges 12 arranged at right angles to the stem or at any other desired angle as indicated in dotted lines, so as to secure the stem upon a horizontal or vertical surface or wall to locate the stem at any desired angle.

Having described my invention, what I claim is;—

1. An insulator consisting of a supporting stem provided with an insulating block having a groove, and a ring of insulating material surrounding the stem and arrange to engage the wire when inserted in said block, substantially as set forth.

2. An insulator consisting of a supporting stem provided with an insulating block having a groove, and a ring of insulating material surrounding the stem and arranged to engage the wire when inserted in said block, with means for holding the ring in clamping position, substantially as set forth.

3. An insulator consisting of a cylindrical supporting stem having a lateral socket or recess, a block of insulating material set in said recess and provided with a transverse wire receiving groove, and a clamping ring

of insulating material embracing the stem and block and provided with means for engaging a fixed locking abutment on the stem, substantially as set forth.

4. In an insulator, the combination of a stem provided with a locking abutment and a recess, an insulating block set in said recess and provided with a transverse wire opening, and a ring of insulating material encircling the stem and block and provided with a series of serrations or shoulders upon its lower edge adapted to engage the locking abutment to clamp against a wire inserted in the opening of the block, substantially as set forth.

In testimony whereof I affix my signature in presence of two witnesses.

GRANT DOBSON.

Witnesses:
C. M. CLARKE,
CHAS. S. LEPLEY.