June 5, 1934. C. R. GAINS 1,961,417

ELECTRIC INTERVAL TIMER

Original Filed Dec. 1, 1930 3 Sheets-Sheet 1

FIG. 2.

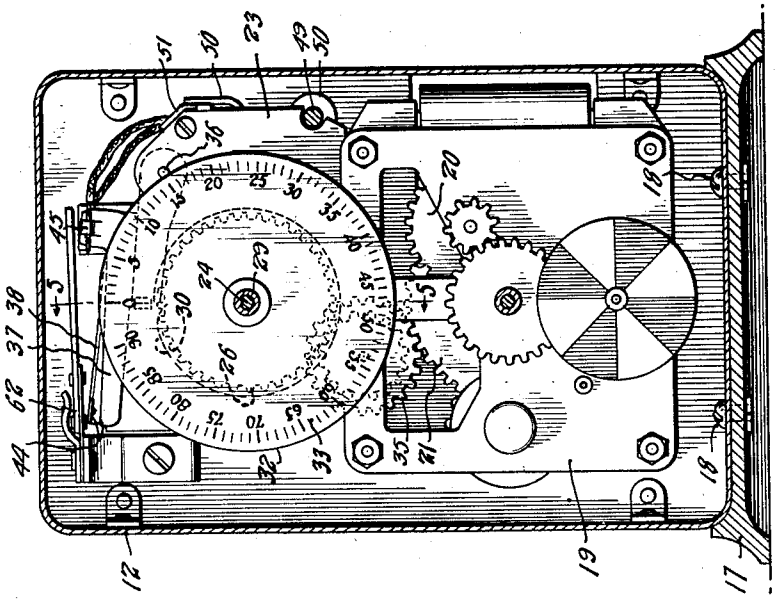

FIG. 1.

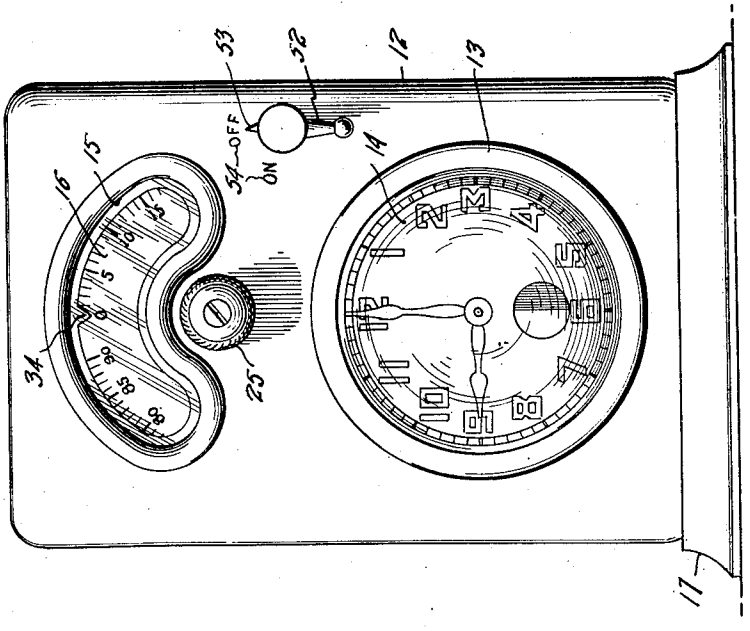

Inventor

C. R. GAINS

By R. J. Whitaker

his Attorney

June 5, 1934. C. R. GAINS 1,961,417

ELECTRIC INTERVAL TIMER

Original Filed Dec. 1, 1930 3 Sheets-Sheet 2

FIG. 4.

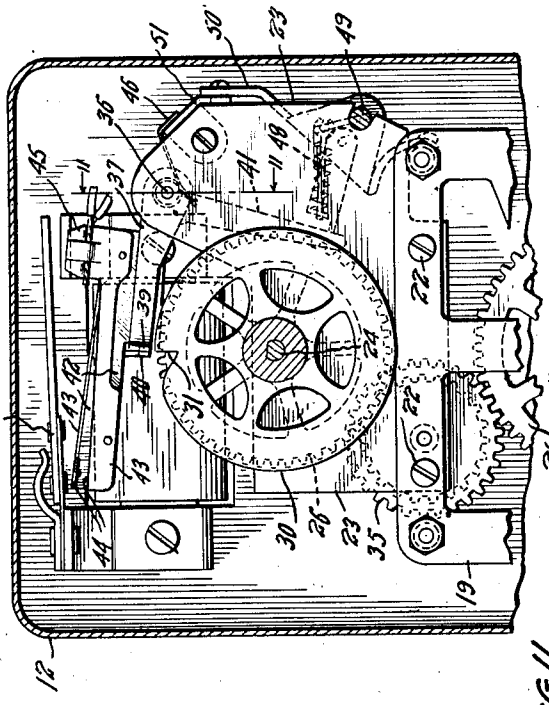

FIG. 5.

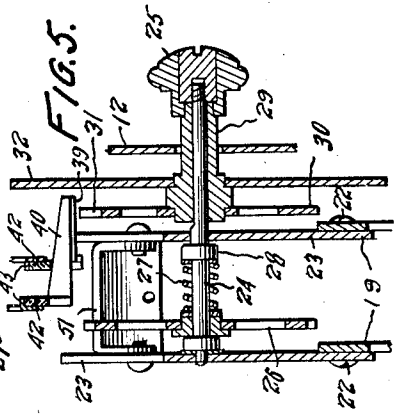

FIG. 11.

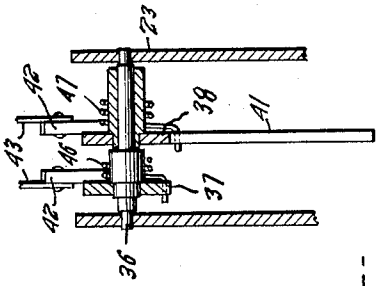

FIG. 3.

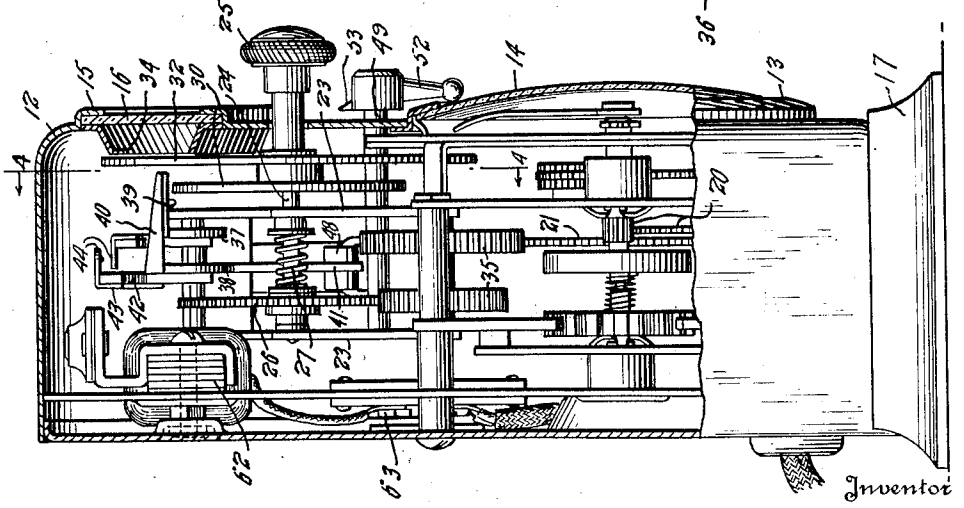

Inventor

C. R. GAINS

By R. J. Whitaker

his Attorney

June 5, 1934. C. R. GAINS 1,961,417

ELECTRIC INTERVAL TIMER

Original Filed Dec. 1, 1930 3 Sheets-Sheet 3

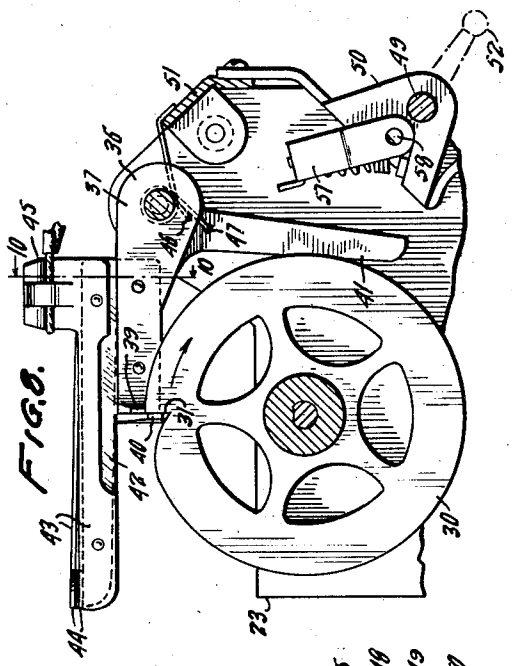

FIG. 8.

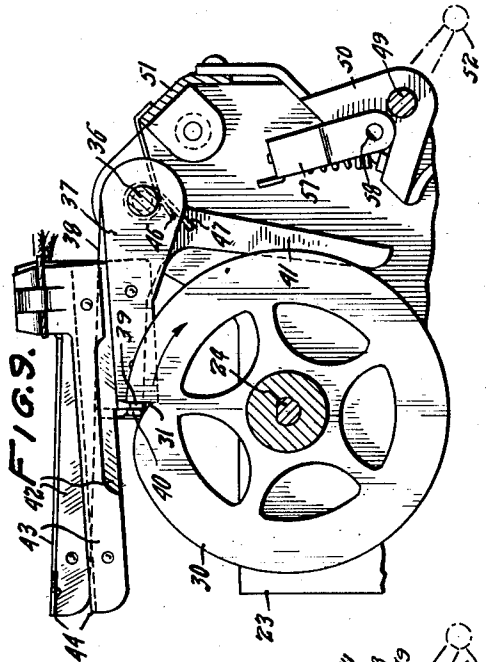

FIG. 9.

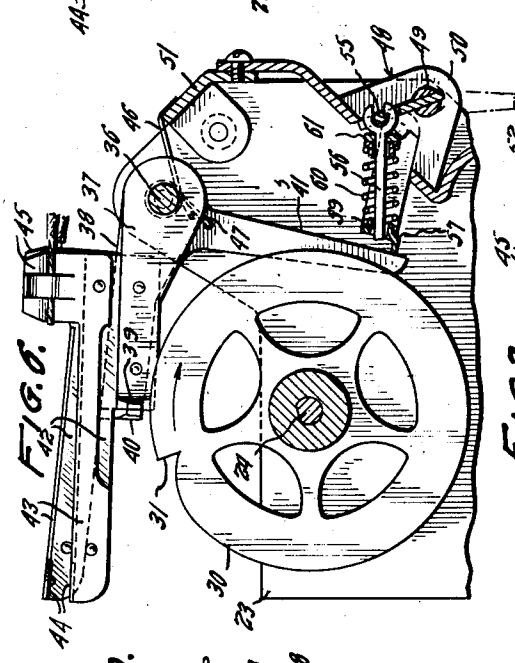

FIG. 6.

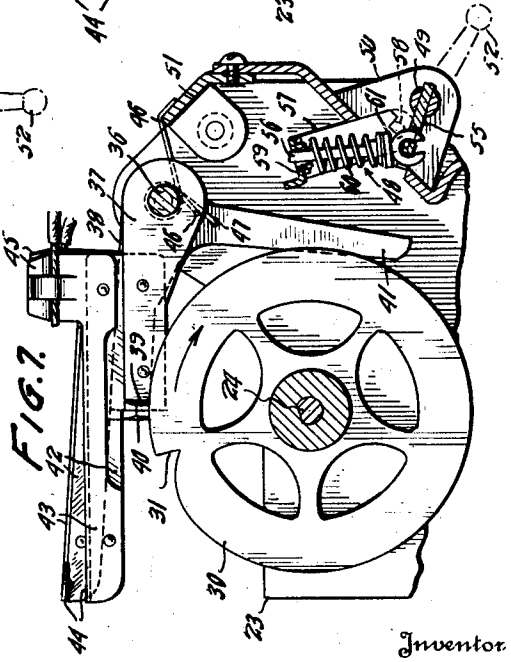

FIG. 7.

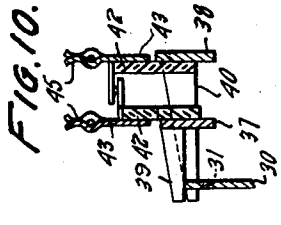

FIG. 10.

Inventor

C. R. GAINS

By R. J. Whitaker

his Attorney

Patented June 5, 1934 1,961,417

UNITED STATES PATENT OFFICE

1,961,417

ELECTRIC INTERVAL TIMER

Chester R. Gains, Muscatine, Iowa

Application December 1, 1930, Serial No. 499,367
Renewed September 28, 1933

2 Claims. (Cl. 200—38)

The object of my invention is to provide a timing device which will sound an alarm at the termination of a predetermined number of minutes. A further object of my invention is to design a timing device which is electrically operated and will sound an alarm and cause an electrical contact to sound an alarm at the end of a predetermined number of minutes. A still further object is to supply a clock mechanism of the synchronous motor type, having geared to it an electrically operated alarming device which may be operated to sound an alarm at the completion of any desired number of minutes.

A still further object is to provide an interval timer which will sound a signal after a desired number of minutes and will automatically stop the signal after a short duration. An additional object is the provision on an electric interval timer of a buzzer which will automatically sound after a definite period of time and then stop buzzing after a momentary duration. Another object is to furnish a timing device which will greatly benefit housewives, and those operating hotel-kitchens, garages, hospitals, schools, laboratories, photographic studios, vulcanizing and enameling plants and any other trade or profession which requires a timing device which will accurately sound an alarm after a desired number of minutes.

In my former patents for Clocks, numbered 1,371,781, of March 15, 1921; 1,424,092, dated July 25, 1922; 1,620,455, granted March 8, 1927; and Des. 79,916 issued November 12, 1929; and in my co-pending applications Serial 358,087, filed April 25, 1929 and Serial 358,963, filed April 29, 1929 now Patent No. 1,821,629, Sept. 1, 1931; I have broadly shown and claimed a mechanical timing mechanism wherein the use of electricity as a motor power is not involved. The present application improves on these old interval timing mechanisms and furthermore modernizes the timing device by substituting electrical means for the old spring operated clock. It must be understood that the use of a synchronous motor clock is not claimed by me in any way, as the use of this type of clock is well known in the art.

Referring to the drawings which form a part of this application:

Figure 1 is a front elevation.

Fig. 2 is a vertical transverse section showing the mechanism in elevation.

Fig. 3 is a side elevation partly in vertical longitudinal section showing the mechanism in side elevation.

Fig. 4 is a vertical transverse section on line 4—4 of Fig. 3.

Fig. 5 is a fragmental section on line 5—5 of Fig. 2.

Figs. 6, 7, 8 and 9 are detail views showing the operation of the sounding alarm mechanism.

Fig. 10 is a detail cross sectional view on line 10—10 of Fig. 8; and,

Fig. 11 is a detail cross sectional view on line 11—11 of Fig. 4.

In the drawings, wherein the same part is designated by the same reference numeral, 12 indicates a casing which has on its rectangular front a bezel 13, having a crystal or lens 14 which shows the clock face. Preferably above this bezel is an annular or crescent bezel 15 provided with glass 16 which shows the timing disk, to be described later.

The casing 12 as shown in Figs. 1, 2 and 3 is attached to a base member 17 by bolts 18. This form of construction is used so that if desired the clock may be used as a wall clock by omitting base 17 and substituting a hanging bail to attach the clock to a wall as shown in the foregoing mentioned patent Des. 79,916.

The mechanism of the clock comprises a synchronous motor clock mechanism 19 which may be of any desirable type now on the market. These electrical units designated generally as 19 are purchased in the open market, then assembled in my clock, and therefore do not constitute any part of my invention. The synchronous mechanism 19 is provided with the usual reduction gearing 20 and the central or hour gear 21. As shown in Figs. 3 and 4, my timing mechanism is attached to the synchronous clock by means of screws 22 and comprises a pair of spaced plates 23, or may be built in as one complete unit using the established clock with my timing gears attached. Journalled between these plates 23 is a shaft 24 which passes through the casing 12 and terminates in an operating knob 25 as shown in detail in Fig. 5.

Rotatably mounted on the shaft 24 is a gear 26 which is frictionally engaged with the shaft 24 by means of a helical spring 27, one end of which engages the hub of the gear 26, the other end engaging the collar 28, rigidly attached to the shaft 24. A sleeve 29 is splined or otherwise attached to the extension of the shaft 24, and has rigidly attached thereto a disk 30, which has provided in its periphery a notch 31. Adjacent this disk 30 is a larger disk 32 which is also attached to the sleeve 29 and has marked on its face a series of radial graduations 33, which are numbered consecutively and clockwise from 0 to 90, adapted to designate from 0 to 90 minutes. A pointer 34 which is part of the casing 12 is arranged to be in juxtaposition to the disk 32. A gear 26 is connected with the gear 21 by means of a reducing train of gears designated as 35, whereby the speed of the gear 26 is reduced to one revolution in ninety minutes.

Pivotally mounted on a transverse shaft 36 are a pair of arms or carriers 37 and 38, the free ends of which are provided with right-angular ex-

tensions 39 and 40, these extensions being adjacent one another. The arm 38 is provided with a right-angular extension 41, the object of which will be described hereinafter. Each of the arms 37 and 38 has attached thereto an insulating strip 42 which extends beyond the free end of the arms 37 and 38, said strips 42 having attached to them contact members 43. Contact members 43 have on one end ears 44, and on the opposite end binding posts or other connecting means 45, by means of which electric contact wires may be attached.

Springs 46 and 47 hold the extensions 39 and 40 in engagement with the disk 30. To raise the arms 37 and 38 above engagement with the disk 30, I provide a toggle lever 48 which is shown in detail in Figs. 6 and 7. This toggle lever includes a shaft 49 mounted in a bracket 50 which is attached to a spacing plate 51 connecting the two plates 23.

The shaft 49 extends through the casing 12 and terminates in an actuating lever 52, provided with a pointer 53 which points to "Off" and "On" designations 54 on the face of the casing 12. Connected to the shaft 49 is an arm 55 which has pivotally attached to it a pin 56. A U-shaped arm 57 is pivotally mounted on the bracket 50 at 58. Arm 57 is provided with an aperture 59 through which the pin 56 is secured to the base. A spring 60 is used, one end of which engages the free end of the arm 57, the opposite end engaging a washer 61 on pin 56. This structure provides a toggle lever similar to a snap switch arrangement, whereby quick contact may be made or broken, and will be firmly held open. Figs. 2, 3 and 4 show a buzzer vibrating device designated as 62, this buzzer being of any desired type.

Electrical connections are made from the electrical inlet 63 through the buzzer 62, the contact members 43, and back to the inlet 63. In operating the device the disk 32 is rotated either way, by means of a knob 25 to any desired number of minutes designated by the pointer 34 coming adjacent one of the graduations 33. For example, if it is desired to sound an alarm at the end of twenty-five minutes, the disk is rotated until numeral 25 on the disk 32 comes under the pointer 34.

The toggle actuating lever 52 is then moved to a horizontal position or until the pointer 53 comes adjacent "On". In this position the switch arms 37 and 38 come in contact with the disk 30 as is shown in Fig. 7. The disk 30 is rotated clockwise by means of its frictional contact with the gear 26, which is in engagement with the clock mechanism through gears 35 and 21. When the predetermined number of twenty-five minutes have elapsed the disk 30 is in the position shown in Fig. 8, in which position the extension 40 of the arm 38 drops into the notch 31 in the periphery of the disk 30, thereby lowering the arm 37 and bringing the contact ears 44 together. This causes a circuit through the contact members 43 to the buzzer 62 causing the armature of the buzzer to vibrate. Further revolution of the disk 30 (about one-half minute) will bring it into the position shown in Fig. 9, when the extension 39 of the arm 37 also drops into the notch 31 breaking the contact between the contact ears 44 as clearly shown in this figure.

An important feature of my novel timing mechanism is that the knob 25 may turn the disk 30 either clockwise or counter-clockwise, so that through the glass 16 the disk may be quickly turned to the required number of minutes.

It may be also understood from the Figures 6, 7, 8 and 9 that if it is desired to stop the sounding of the alarm before it automatically ceases, that may be accomplished by manually turning the lever 52 to its "Off" position, as shown in Fig. 6,

Figure 10 is a detailed sectional view through the two contact arms showing more clearly how contact is made. From this figure and Fig. 5 it also may be seen how contact is broken by the extension 40 engaging the insulating strip 42 of the arm 37, thereby raising this arm 37 as the arm 38 is raised.

The electricity to be used is alternating current—110 voltage, 60 cycles.

It is understood that the form of my invention herein shown and described is to be taken as a preferred embodiment of the same, and that various changes in the shape, size, and arrangement of parts, may be resorted to, without departing from the spirit of my invention or the scope of the subjoined claims.

What I claim as new, and desire to secure by Letters Patent of the United States is:

1. In a switch mechanism, a frame, a shaft rotatably supported in said frame, means for transmitting rotary motion to said shaft from a source of power, a disk fixed upon said shaft and formed with a V-shaped notch in its periphery having an abrupt wall at one end and its other wall merging into the marginal edge of the disk, arms pivotally mounted in said frame above said disk in transverse spaced relation to each other and having fingers at their free ends resting upon the marginal edge of said disk, one finger being in front of the other and entering the notch at its abrupt wall in advance of the other finger when the disk is rotated, insulation carried by said arms, contacts carried by said insulation and adapted to have circuit wires secured to them, said contacts having portions extending towards each other between the arms one above the other and contacting with each other when the first finger only is in said notch, and means to releasably secure the arm carrying the first finger in a position to retain its finger out of engagement with said disk.

2. In a switch mechanism, a rotatable shaft, a disk fixed upon said shaft and formed with a notch in its periphery, arms pivotally mounted in transverse relation to each other and each having a finger resting upon the marginal edge of the disk, one finger being in front of the other and entering said notch in advance of the second finger when the disk is rotated, insulation carried by said arms, contacts carried by said insulation and adapted to have circuit wires secured to them, said contacts having portions contacting with each other when the first finger only is in said notch, a lever arm for the arm carrying the first finger, and a toggle bracket movable into and out of position to engage the lever arm and move the arm to a position to retain the first finger out of contact with said disk.

CHESTER R. GAINS.