Oct. 8, 1929. W. J. STEBLER 1,730,793

BRAKE BEAM SUPPORT

Filed July 22, 1927

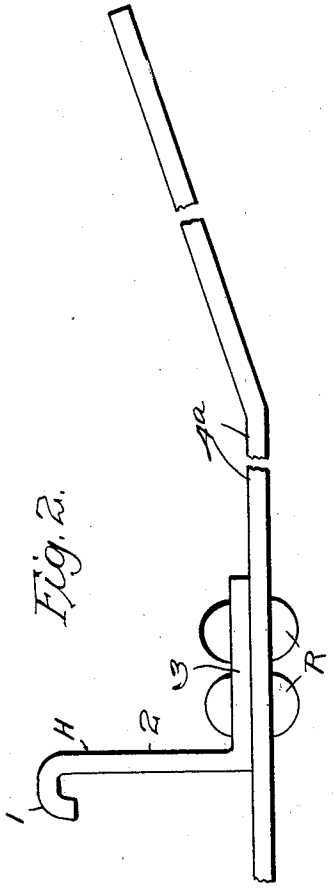

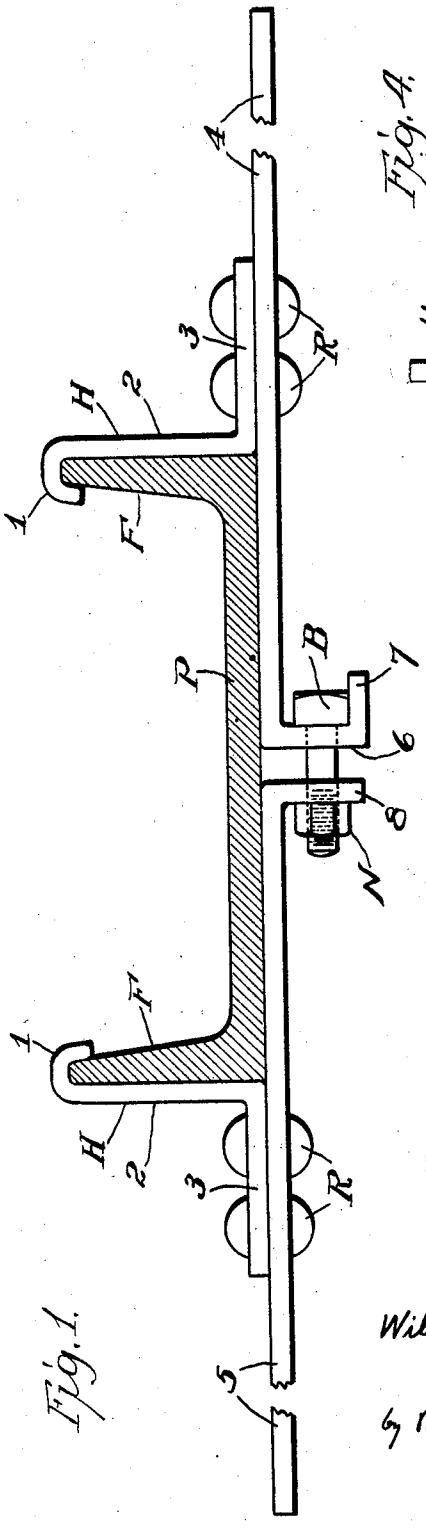

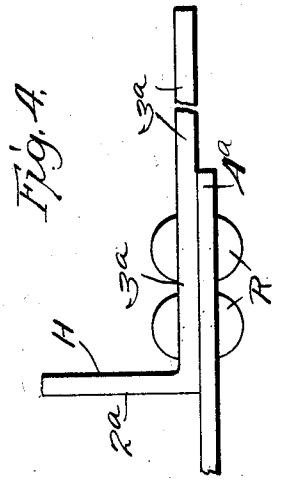

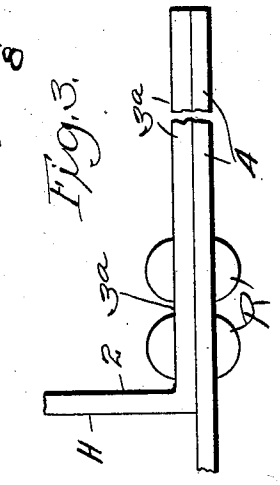

WITNESSES

A. B. Wallace

Jo Baily Brown

William J. Stebler,
INVENTOR,
by Brown & Critchlow
his attorneys

Patented Oct. 8, 1929 1,730,793

UNITED STATES PATENT OFFICE

WILLIAM J. STEBLER, OF PITTSBURGH, PENNSYLVANIA, ASSIGNOR, BY DIRECT AND MESNE ASSIGNMENTS, OF ONE-FOURTH TO WALTER J. CURLEY, ONE-EIGHTH TO ROBERT ROGERS, ONE-EIGHTH TO M. A. HERALD AND ONE-FOURTH TO D. J. McLAUGHLIN, ALL OF PITTSBURGH, PENNSYLVANIA

BRAKE-BEAM SUPPORT

Application filed July 22, 1927. Serial No. 207,629.

This invention relates to safety guards for preventing the falling of brake beams of railway car trucks. The objects of the invention are in part to provide a simple, strong, economically manufactured, easily attached and detached, guard for the purpose stated. Another object is to provide such a guard in a form that can be readily attached to and detached from the standard spring planks of railway car trucks. Another object is to provide a guard which may be attached or detached without special tools, by a single workman, and without requiring special construction in the spring plank or any other of the car truck parts, and not requiring any later modification, such as the drilling of holes or the providing of lugs thereon or notches therein.

These and other advantages of this invention will be apparent to those skilled in the art from the following specification.

Fig. 1 is a cross section of a spring plank of a railway car truck, showing the brake beam safety guard attached thereto; Figs. 2, 3 and 4 show modifications of the supports, similarly applied.

The drawing shows a vertical cross section through a standard form of spring plank, and a side elevation of the brake beam guard constituting this invention in completed form and assembled on the spring plank in operative position.

As is well known to those familiar with this art, brake beams of railway car trucks sometimes become loosened, due to failure of supporting links, or other causes, and one or both ends of the brake beam falls. This produces an inoperative condition of the brakes, and may also lead to an actual wrecking of a car. In order to furnish a safety guard to catch and support the brake beam in case of accidental loosening or falling thereof, it is desirable to have a guard positioned beneath each end of each brake beam to catch and support it if it falls below its normal position. In fact, such devices are now required.

Referring to the drawings, a standard form of spring plank P is shown in cross section. This consists of the usual upturned sides or flanges F, connected by a body portion or web between them.

The guard constituting this invention comprises two similar hook members H. These have upper terminal hooks 1, adapted to extend over and around the upper edges of the flanges of the spring plank as illustrated. Vertical portions 2 connect the hooks to horizontal portions 3, which seat upon the tops of laterally extending guard arm members 4 and 5, respectively. The guard arm member 4 comprises a straight piece of flat spring steel having its inner end bent to form a vertical portion 6 and then a horizontal terminal portion 7 therebelow. The guard arm 5 is likewise composed of a straight piece of spring steel similar to that forming the member 4. Its inner end is bent at right angles to form a vertical portion 8. The two hook members H are seated upon the upper faces of the guard arms 4 and 5, respectively, and are rigidly attached thereto, preferably by rivets R. The vertical portions 6 and 8 of the arm members 4 and 5 are perforated to provide aligned holes adapted to receive a bolt B, the square head of which is prevented from rotation by contact with the terminal portion 7 of the member 4, and the body of which is adapted to extend through the openings in the members 6 and 8, and to be engaged at its free end by a suitable lock nut 10. By this arrangement the attaching bolt B is entirely independent of the spring plank in the sense that it does not extend therethrough and is not in contact therewith. It acts by putting tension on the support members.

The hook members H are first forged or otherwise fabricated to the desired shape as shown in the drawings. The guard arm members 4 and 5 are likewise shaped at their

inner ends, holes for rivets R and bolt B are provided, and the hook members are permanently attached to the guard arm members, as by the rivets R, as illustrated. They may be welded thereto, but riveting is cheaper and more certain.

When this guard or brake-beam support is to be applied in operative position to a car truck, the bolt being removed, it is only necessary to slip the hooks 1 over the flanges of the spring plank, first raising the outer ends of the arm members. The hooks are not riveted or otherwise positively attached to the spring plank and are in that sense independent thereof. Then by rotating the outer arm ends downwardly about the hooks 1 as centers the inner ends or vertical portions 6 and 8 of the arm members are brought into juxtaposition and the two parts of the device lie closely against the flanges and the web of the spring plank. The bolt B is then inserted through the adjacent ends 6 and 8 of the supporting arm members, and the lock nut 10 is used to draw the adjacent ends of the arms together until the two arm portions are rigidly connected and held firmly against the spring plank as shown. A certain amount of resiliency in the vertical portions 6 and 8 will insure a constant tight seating of the members on the spring plank and aid in preventing loosening of the lock nut.

To detach the guard from the truck it is only necessary to remove the single bolt B, raise the outer ends of the arms 4 and 5, when the parts may be readily removed without any special tools or without disturbing any part of the truck.

It will be understood by those familiar with this art that the outer ends of the guard arm members 4 and 5 extend under the ends of two different brake beams on the same side of a car truck, in position to catch the ends of the brake beams should they fall below their lowermost normal positions.

It will also be apparent that each arm member is strongly constructed, and adapted to carry the weight of a brake beam easily. There is only the strain of keeping the two main members in position on the bolt, all major strains being carried by the members 4 and 5 and the hook members H, all of which are very strong.

It will also be understood that the outer ends of arms 4 and 5 may be inclined upwardly to form brake beam guides, if desired. Their length and strength will be determined to suit the particular conditions to be met.

A modification in construction that does not affect the functioning of the device may be made in that instead of having the portions 3 of the hook members terminate a short distance beyond the rivets R, the horizontal portions 3 may be extended to the end of the guard, coextensive with the free ends of guard members 4 and 5. This reinforces the supporting arms. Or the portions 3 may be extended a suitable length to form guard arms, and the outer portions of members 4 and 5 may terminate with the riveted connections to members 3. In all these forms the guard arms are formed by rigid attachment of the hook and base members into integral cooperating members connected by an intermediate detachable member. These variations of structure are obvious from the description given, and therefore are not illustrated.

I claim:

1. A guard for supporting brake beams of railway trucks comprising laterally extending brake-beam support guard arms, hook members carried by and integral with said arms and adapted to engage the edges of the flanges of a spring plank, the inner ends of the supporting members extending downward beneath a spring plank, and a member independent of the spring plank connecting said inner ends.

2. A safety guard for railway truck brake beams comprising laterally extending guard arms adapted to have their outer ends positioned beneath the ends of brake beams and their inner ends beneath a spring plank, said guard arms having at their inner ends downwardly turned portions having holes to receive a compression bolt, a bolt extending through said downwardly extending portions, and hook members adapted to engage the edges of a spring plank and to support the guard arms.

3. A safety guard for brake beams comprising two laterally extending guard arms adapted at their outer ends to extend beneath the ends of brake beams and at their inner ends to extend beneath a spring plank, said arms having integral hook members adapted to extend over and around the edges of a spring plank and to be fixed in position thereon by rotative movement of the arm members, the ends of the arm members beneath the spring plank being adapted to be engaged by a tension bolt, and a bolt adapted to extend through said members and to lock the two supporting members to each other, said hook and bolt members being independent of the spring plank.

4. In a railway car truck construction comprising a spring plank having a horizontal body portion with upturned flange portions, a safety guard for brake beam supports comprising two laterally extending aligned arm members adapted to fit against the under side of the spring plank and having hook extension members adapted to engage the flanges of the spring plank, and detachable means independent of the spring plank for locking together under tension the adjacent ends of the arm members underneath the spring plank.

5. In a railway car truck construction com-

prising a spring plank having a horizontal body portion with upturned flange portions, a safety guard for brake beam supports comprising two laterally aligned arm members adapted to fit against the under side of the spring plank and having extension hook members adapted to fit against the outer face of the plank flanges and to engage the edges thereof, the inner ends of the arm members being spaced apart longitudinally and a compression bolt for connecting the adjacent ends of the arm members underneath the spring plank.

In testimony whereof, I sign my name.

WILLIAM J. STEBLER.