No. 661,917. Patented Nov. 13, 1900.

W. W. MULFORD.

APPARATUS FOR MAKING BOLTS, &c.

(Application filed Jan. 30, 1900.)

(No Model.) 5 Sheets—Sheet 1.

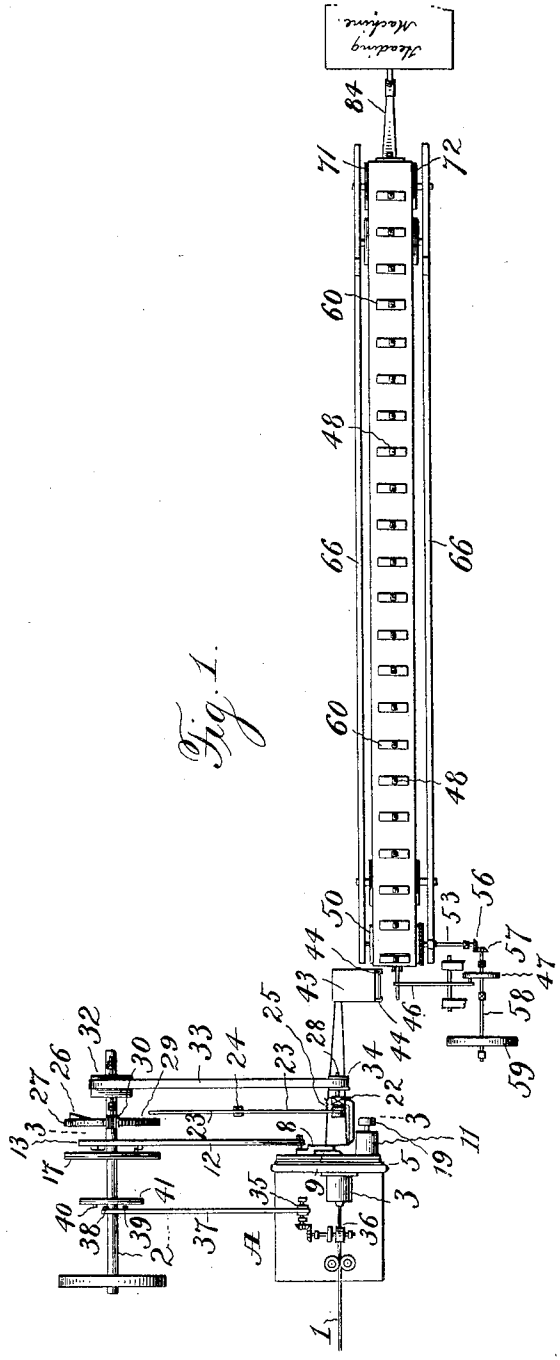

Fig. 1.

Witnesses
Jas. E. Hutchinson.
E. W. Clement

Inventor
W. W. Mulford
By Watson & Watson
Attorneys

THE NORRIS PETERS CO., PHOTO-LITHO., WASHINGTON, D. C.

No. 661,917. Patented Nov. 13, 1900.

W. W. MULFORD.

APPARATUS FOR MAKING BOLTS, &c.

(Application filed Jan. 30, 1900.)

(No Model.) 5 Sheets—Sheet 2.

Fig. 2.

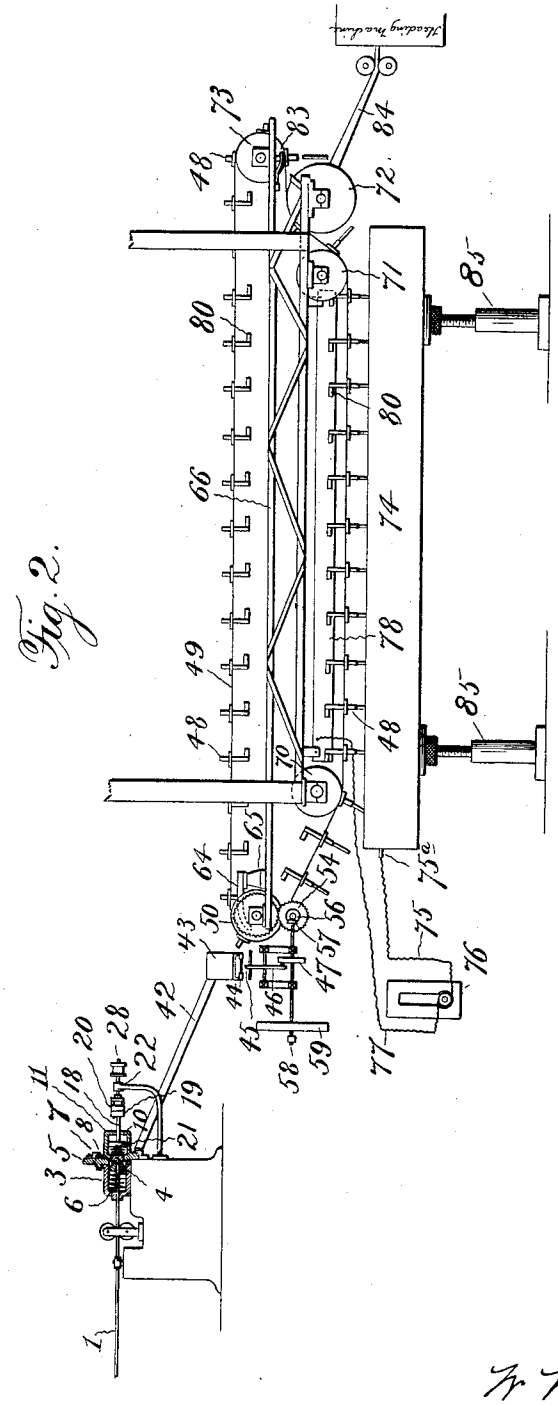

Witnesses
Jas. E. Hutchinson.
C. W. Clement.

Inventor
W. W. Mulford
By Watson & Watson
Attorneys

THE NORRIS PETERS CO., PHOTO-LITHO., WASHINGTON, D. C.

No. 661,917. Patented Nov. 13, 1900.

W. W. MULFORD.

APPARATUS FOR MAKING BOLTS, &c.

(Application filed Jan. 30, 1900.)

(No Model.) 5 Sheets—Sheet 3.

Fig. 3.

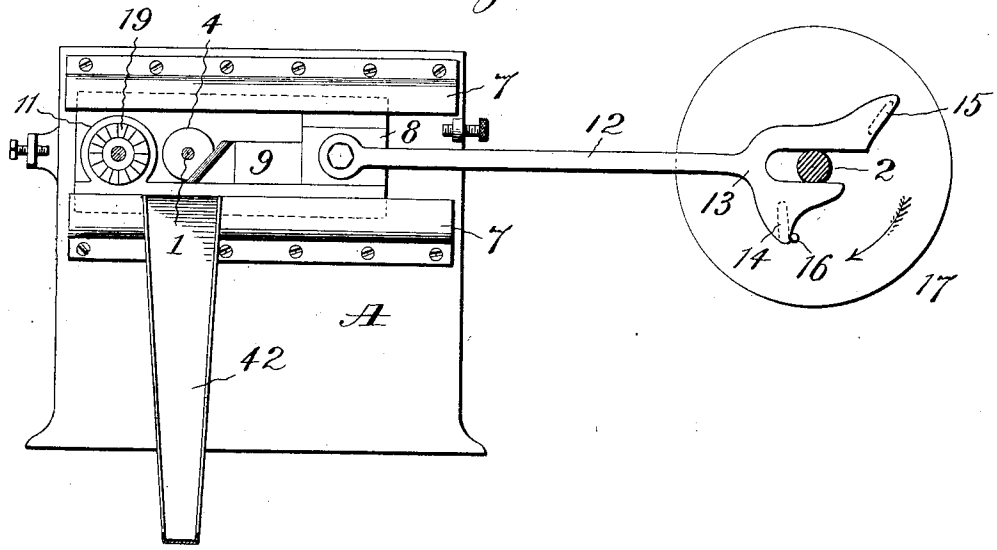

Fig. 4.

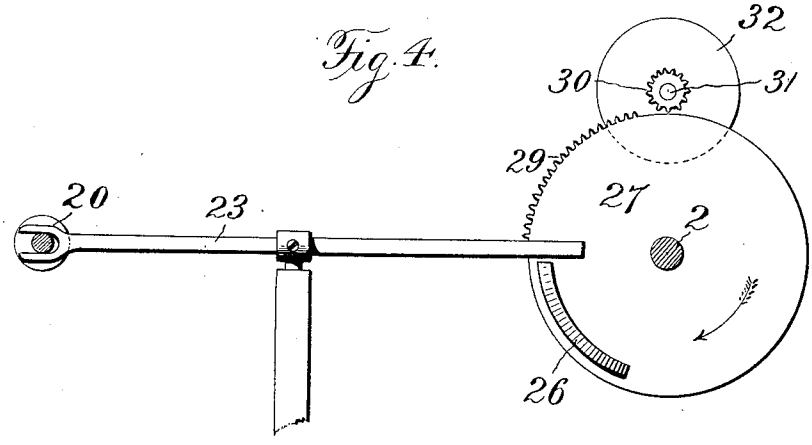

Witnesses
Jas. E. Hutchinson.
C. W. Clement.

Inventor
W. W. Mulford
By Watson & Watson
Attorneys

THE NORRIS PETERS CO., PHOTO-LITHO., WASHINGTON, D. C.

No. 661,917. Patented Nov. 13, 1900.

W. W. MULFORD.

APPARATUS FOR MAKING BOLTS, &c.

(Application filed Jan. 30, 1900.)

(No Model.) 5 Sheets—Sheet 4.

Fig. 5.

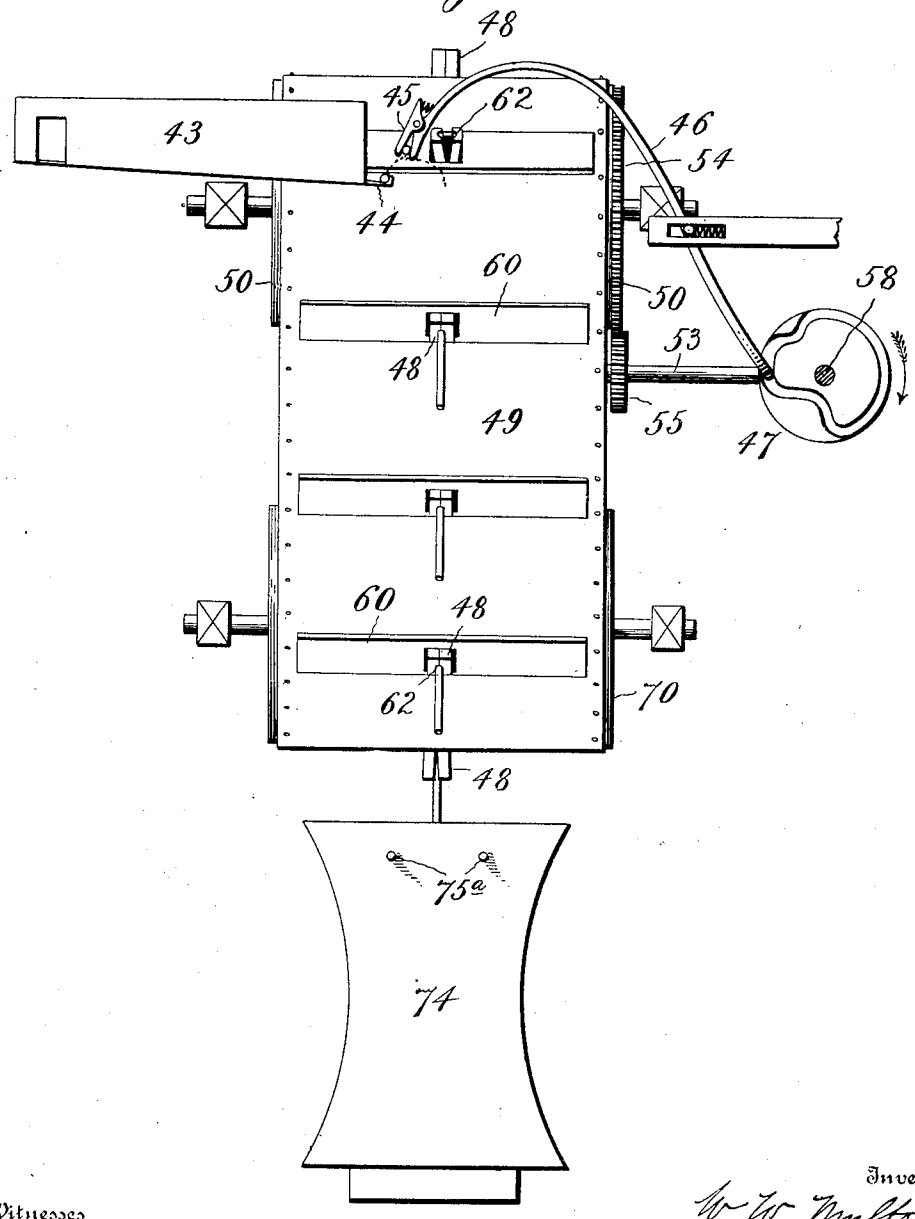

Witnesses
Jas. E. Hutchinson.
C. W. Clement.

Inventor
W. W. Mulford
By Watson & Watson
Attorneys

THE NORRIS PETERS CO., PHOTO-LITHO., WASHINGTON, D. C.

No. 661,917. Patented Nov. 13, 1900.

W. W. MULFORD.

APPARATUS FOR MAKING BOLTS, &c.

(Application filed Jan. 30, 1900.)

(No Model.) 5 Sheets—Sheet 5.

Fig. 6.

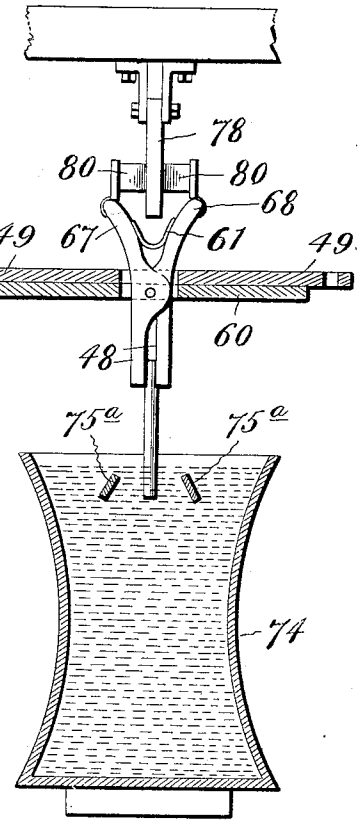

Fig. 7.

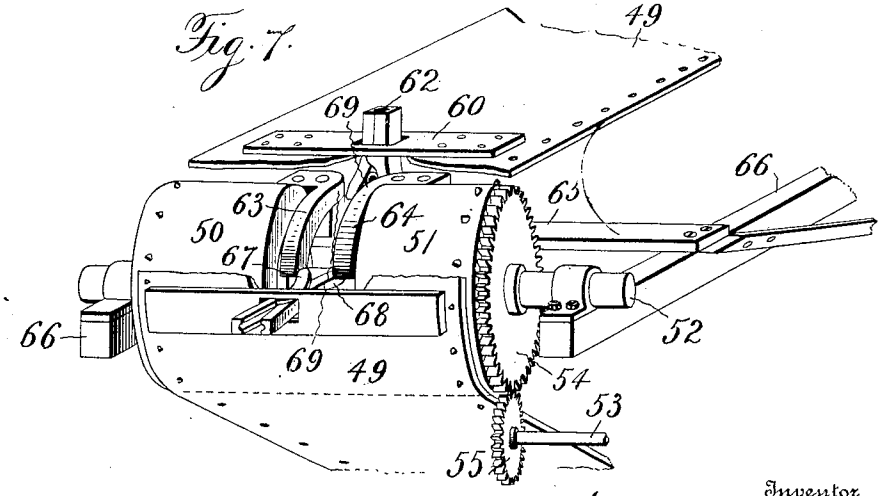

Witnesses
Jas. E. Hutchinson.
C. W. Clement.

Inventor
W. W. Mulford
By Watson & Watson
Attorney

THE NORRIS PETERS CO., PHOTO-LITHO., WASHINGTON, D. C.

UNITED STATES PATENT OFFICE.

WILLIAM W. MULFORD, OF COLUMBUS, OHIO.

APPARATUS FOR MAKING BOLTS, &c.

SPECIFICATION forming part of Letters Patent No. 661,917, dated November 13, 1900.

Application filed January 30, 1900. Serial No. 3,349. (No model.)

To all whom it may concern:

Be it known that I, WILLIAM W. MULFORD, a citizen of the United States, residing at Columbus, in the county of Franklin and State of Ohio, have invented certain new and useful Improvements in Apparatus for Making Bolts, of which the following is a specification.

This invention relates to an improved process and apparatus for automatically preparing bolt-blanks for delivery to a heading-machine; and it includes means for automatically pointing and cutting off blanks from a rod or wire, means for delivering said blanks to a continuously-traveling conveyer, a receptacle containing a liquid into which the ends of said bolts are dipped as they pass along upon the conveyer, an electric circuit in which said blanks and liquid are included and through which a current is passed to heat the ends of said blanks, and means for releasing the bolts and delivering them to a heading-machine after they have passed out of the liquid.

In the accompanying drawings, Figure 1 is a plan view of an apparatus for carrying out my invention. Fig. 2 is a side view of the same, the pointing and cutting-off machine being shown partly in section. Fig. 3 is a view on the line 3 3 of Fig. 1. Fig. 4 is a side view of the gear and lever for operating the cutter which points the bolts. Fig. 5 is an end view of the conveyer and tank. Fig. 6 is a section through the tank, conveyer, and contact-bar; and Fig. 7 is a perspective view showing the driving-pulleys of the conveyer and the device for causing the spring-jaws upon the conveyer to open for the purpose of receiving the bolt-blanks.

Referring to Figs. 1 to 4, inclusive, of the drawings, A indicates a machine for cutting off rods of suitable lengths to form the bolts from a wire 1, which is automatically fed forward to a knife at the proper time by means of suitable feeding mechanism operated from a driving-shaft 2. The wire 1 is fed through a cylinder 3 and a central perforation in a disk 4, which is movable within the cylinder and which is normally held flush with the face-plate 5 by means of a spring 6. Arranged within horizontal guide-plates 7 upon the face-plate is a cross-head 8, carrying a knife 9 for cutting off the wire, and a rotary cutter 10, arranged within a cylinder 11 and adapted to trim or point the end of the wire to remove the rough edges and prepare it for the threading operation when the bolt is otherwise completed. The cross-head is movable longitudinally within the guideways by means of a push-rod 12, the rear end 13 of which is forked and straddles the shaft 2, as shown in Fig. 3. Cams 14 and 15 (shown in dotted lines in said figure) are arranged upon the forks of the push-rod, and a stud or pin 16, secured to a wheel 17 upon the shaft 2, is adapted to engage said cams alternately, thereby reciprocating the push-rod and moving the cross-head back and forth within the guideways. The wheel moves in the direction indicated by the arrow, and when the stud engages the cam 14 the knife is forced forward and the rod cut off. The continued movement of the stud brings it into engagement with the cam 15, and the knife is drawn backward until the cutter 10 comes opposite the disk 4, when the stud leaves said cam and the cross-head stops. The cutter remains opposite said disk until the pin 16 again reaches the cam 14, and during this interval between the stopping and starting of the push-rod the cutter 10 is caused to move inward against the spring-pressed disk 4 and to rotate. To this end the shaft 18, connected with the cutter 10, is extended beyond the casing 11 and is provided with a clutch member 19, adapted to be engaged by a clutch member 20, the latter being automatically moved inward at the proper time to engage the member 19 and force the cutter against the rod. The cutter is normally pressed outward by means of a spring 21 within the casing 11. The clutch member 20 is secured to a shaft 28, mounted within a suitable bearing 22, and said shaft is movable longitudinally within the bearing by means of a forked lever 23, pivoted upon a standard 24. As shown in Fig. 1, the clutch member 20 is normally held out of the path of the member 19 by means of a spring 25. When, however, the rotary cutter is brought into position to point the wire, the rear end of the lever 23 is engaged by a cam 26 upon the side of a wheel 27, secured upon the shaft 2, as shown in Fig. 4. This cam causes the lever to swing horizontally upon its pivotal point, thereby throwing the clutch members

into engagement, as shown in Fig. 2, and as soon as said clutch members are engaged the shaft 28, carrying the member 20, is caused to rotate by means of the engagement of a rack 29 upon the wheel 27, the teeth of which engage a pinion 30, mounted upon a shaft 31, the latter having a broad pulley 32, connected by a belt 33 with a small flanged wheel 34 upon the shaft 28. The cam 26 and the rack 29 are so positioned upon the wheel 27 that the cam will first engage the lever, thereby throwing the clutch members into engagement, and the teeth of the rack will immediately thereafter engage the pinion and cause the rotation of the cutter. The cam is formed so as to force the cutter gradually inward against the point of the rod, and the cam and rack are of about the same length, so that when the cam has passed beyond the lever 23 the teeth upon the rack will have passed out of engagement with the pinion 30, thereby stopping the rotation of the cutter. As the pulley 34 moves with the shaft 28 the belt 33 shifts upon the broad pulley 32.

Any usual gripping device may be arranged upon the pointing-machine to take up the thrust of the cutter against the end of the wire.

The parts of the machine are so arranged that the operations of pointing, cutting off, and feeding the wire forward take place automatically in succession, the movement of the cutter to point the wire being followed by a movement of the feeding apparatus while the cross-head is moving forward after the cutter has moved out of the way and before the knife reaches the wire, the cutting-off operation then taking place.

Any suitable means may be employed for feeding the wire forward. As shown, a ratchet-wheel 35, connected by suitable gearing to feed-wheels 36, is operated intermittently by a rack-bar 37, having cams 38 and 39, which are engaged at the proper time by a pin 40 upon a wheel 41, the latter being mounted upon the shaft 2. The rear end of the bar 37 is forked like the rear end of the push-rod 12, and the cams are formed and arranged to effect the movement of the rack-bar at the desired times.

Any suitable machine may be employed for pointing and cutting off the rods, and I have not, therefore, thought it necessary to illustrate more in detail the feeding mechanism or the construction of this part of the apparatus.

The bolt-blanks which are cut off drop into a narrow trough or chute 42 and slide down into a broad trough 43, arranged at right angles to the chute 42. Upon reaching the trough 43 the blanks roll downward onto a pair of arms 44, having upturned ends which arrest the motion of the blanks. The blanks are automatically lifted from the arms 44 by means of a pair of spring-jaws 45 (see Fig. 5) upon a gooseneck-lever 46, said lever being moved by a cam 47 to carry the bolt-blanks, one at a time, from the arms 44 outward and downward into the path of a series of spring jaws or holders 48 upon an endless conveyer 49, said jaws 48 being arranged to automatically close tightly upon the ends of the blanks and to pull them from the jaws upon the gooseneck. The course followed by the jaws 45 is indicated in dotted lines in said figure. The inner faces of said jaws flare outwardly at the ends, so that when they are pressed down upon the bolt lying upon the arms 44 said jaws will spread and grip the bolt at its center.

The belt or conveyer is driven by a pair of pulleys 50 and 51, having teeth which extend into perforations in the belt. (See Fig. 7.) These pulleys are mounted upon a shaft 52, the latter being driven by a shaft 53 and gear-wheels 54 and 55, said shaft 53 in turn being geared by bevel-gears 56 and 57 to a shaft 58, arranged parallel with the belt and provided with a suitable driving-wheel 59. The cam-wheel 47, which operates the gooseneck, is mounted upon the shaft 58.

The spring jaws or holders 48 are arranged equidistantly throughout the length of the conveyer. As shown in Fig. 7, the jaws are pivoted within openings in cross-pieces 60 and they are normally held closed by means of springs 61. The inner faces of the jaws are grooved longitudinally, as shown at 62, to afford a better gripping-surface for the bolt-blank. Each revolution of the shaft 58 causes the gooseneck-lever to bring the pointed end of a bolt-blank into position to be gripped by one of the holders 48, and the gearing between said shaft and the driving-pulleys of the belt is so proportioned that the holders in succession will come opposite the bolts as they are brought into position. In order that the jaws may be opened to receive the blank from the gooseneck, I arrange between the pulleys 50 and 51 a pair of arms 63 and 64, which are secured at their rear ends to a cross-piece 65, mounted upon the frame 66, which supports the conveyer. These arms curve forwardly and downwardly to a point nearly opposite the point of delivery of the bolt-blanks to the jaws and form a narrow channel through which the inner ends 67 and 68 of each pair of jaws must pass. The adjacent faces of the arms 63 and 64 flare outwardly at their rear ends, as shown at 69, so that as the ends 67 and 68 of the jaws enter the channel said inclined faces will force the inner ends of the jaws together and separate the outer ends. As soon as the jaws pass the curved arms the spring 61 forces their rear ends apart and closes their outer ends upon the bolt-blank and the continued movement of the conveyer causes the jaws to pull the blank from the jaws upon the gooseneck-lever.

The conveyer 49 passes over the driving-pulleys 51 and 52 and a series of pairs of pulleys 70, 71, 72, and 73, which are supported by the framework 66. Beneath the belt is arranged a suitable elongated tank or receptacle 74, which is supported upon adjustable stand-

ards 85, so that it may be raised or lowered. This tank is filled with a liquid which is more or less of a conductor, and it is so arranged that as the blanks traveling with the conveyer reach the lower horizontal part of the conveyer between the pulleys 70 and 71 the ends of said blanks will dip into the liquid and will remain therein until they reach the opposite end of the tank, when they will be raised out of the liquid, owing to the change in the course of the conveyer, which passes over the pulleys 72. During the passage of the bolt-blanks through the liquid the ends which dip into the liquid are electrically heated by the passage of an electric current from the bolts to the liquid, or vice versa, and after passing out of the liquid they are released from the jaws by means of curved arms 83, arranged at the rear of the frame, said arms being similar to the arms 63 and 64 upon the front of the frame. The blanks then drop into a chute 84, by means of which they are conveyed to a heading-machine. The liquid within the tank is electrically connected by a wire 75 to one pole of a dynamo 76 or other suitable source of electricity of sufficient volume to heat all of the blanks within the tank. Preferably said wire is connected to rods 75^a, adjustably arranged within the liquid on either side of the series of bolts, although it may be connected to the metal tank. A wire 77, leading from the opposite pole of the dynamo, is connected to a flat contact bar or rail 78, suspended from the frame. Spring contact-pieces 80 are affixed to the ends 67 and 68 of the jaws, and after each successive pair of spring-jaws carrying a bolt-blank passes the pulleys 70 said contact-pieces trail along on either side of the rail 78, as shown in Fig. 6, and the circuit is thereby completed from the dynamo through wire 75 and the liquid in the tank to the bolts, thence by way of the jaws, contact-bar 78, and wire 77 back to the opposite pole of the dynamo. The passage of the current between the liquid and the bolts causes the immersed ends only of the latter to become heated. As the conveyer travels at a constant rate of speed, each blank will dip into the liquid for a fixed length of time, so that the blanks are all heated to about the same degree before passing out of the liquid. The degree of heat to which the blanks are subjected may be varied by varying the quantity of the electric current or by varying the speed of the apparatus, so that the bolts will dip into the liquid for a longer or shorter period of time. Regulation may also be effected to some degree by raising or lowering the tank, thus regulating the depth of the immersion of the blanks. The electrodes 75^a are preferably made flat and inclined in opposite directions, as shown in Fig. 6. With this system of heating blanks it will be noted that only the ends of the blanks upon which the heads are to be formed are heated to a red heat, owing to the fact that the heating is mainly due to the passage of small arcs between the liquid and the blanks through the gaseous bubbles which are formed by electrolytic action. It will be seen that by this method the blanks may be heated and delivered to an ordinary heading-machine as fast as the latter can be operated to form the heads, and that in the manufacture of bolts by this process the large amount of labor usually required in separately heating the bolts and manually delivering them to a heading-machine is avoided.

Any suitable heading-machine may be employed to head the bolts, and any suitable means may be utilized for the purpose of pointing, cutting off, and delivering the blanks to the holders upon the conveyer, or said blanks may be delivered manually to the holders. The source of electricity may be a dynamo or battery, and the connections between said source and the liquid and bolt-blanks may be arranged in various ways. The liquid may be any suitable saline or acid solution which will conduct the electric current.

Various changes may be made in the construction of the apparatus without departing from the spirit and scope of my invention.

Without therefore limiting myself to the precise construction herein shown and described, what I claim, and desire to secure by Letters Patent of the United States, is—

1. An apparatus for heating a series of metal rods or blanks preparatory to heading the same, comprising a liquid, means for automatically extending said rods into and removing them from the liquid, and a suitable source of electricity, the opposite poles of which are connected to said liquid and to the rods while in the liquid, respectively.

2. An apparatus for heating a series of metal rods or blanks preparatory to heading the same, comprising a receptacle containing a liquid, a conveyer to which the rods are connected, said conveyer being arranged to extend the rods into the liquid, and a suitable source of electricity, the opposite poles of which are connected to said liquid and to the rods while in the liquid, respectively.

3. An apparatus for heating metal rods or blanks preparatory to heading the same, comprising a receptacle containing a liquid, a conveyer arranged above said liquid, said rods being dependently attached to the conveyer and extending into the liquid, and a suitable source of electricity, the opposite poles of which are connected to said liquid and to said rods, respectively.

4. An apparatus for heating metal rods or blanks preparatory to heading the same, comprising a receptacle containing a liquid, a conveyer arranged above said liquid, a contact-bar arranged parallel with said conveyer, a series of jaws carried by said conveyer and in sliding engagement with said bar, said rods being carried by said jaws and extending into the liquid, and a suitable source of electricity,

the opposite poles of which are connected to said liquid and to said contact-bar, respectively.

5. An apparatus for heating metal rods comprising a receptacle containing a liquid, a conveyer arranged to carry a series of metal rods or blanks and to extend said rods into the liquid, a suitable source of electricity, the opposite poles of which are connected to said liquid and rods respectively, and means for automatically releasing said rods from the conveyer after they have passed out of the liquid.

6. An apparatus for heating metal rods comprising a receptacle containing a liquid, a conveyer, a series of jaws attached to said conveyer, each jaw being adapted to carry a rod and to extend said rod into the liquid, a suitable source of electricity, the opposite poles of which are connected to said liquid and to said rods respectively, and means for automatically opening the jaws to release the rods when said rods have passed out of the liquid.

7. An apparatus for heating metal rods comprising a receptacle containing a liquid, a conveyer, a series of jaws carried by said conveyer, each jaw being arranged to carry a rod or blank and to extend said rod into the liquid, means for automatically opening said jaws to receive the rods, a suitable source of electricity, the opposite poles of which are connected to said liquid and to said rods respectively, and means for automatically opening the jaws to release the rods when said rods have passed out of the liquid.

8. An apparatus for heating metal rods comprising a traveling conveyer having a series of jaws or holders, each jaw being adapted to carry a rod or blank, means for automatically feeding said rods to said holders, a receptacle containing a liquid into which the rods extend while passing along with the conveyer, a suitable source of electricity, the opposite poles of which are connected to said liquid and to said rods while extended into the liquid, and means for automatically releasing said rods from the jaws or holders after they have passed out of the liquid.

9. The combination with a machine for cutting off bolt-blanks from a wire or rod, and a conveyer having jaws or holders thereon, of means for automatically delivering said blanks to the holders, a receptacle containing a liquid into which said rods dip as they pass along on the conveyer, an electric circuit in which said liquid and the immersed rods are included, and means for releasing said rods from the holders after they pass out of the liquid.

10. The combination with a machine for pointing and cutting off bolt-blanks from a wire or rod and a conveyer having jaws or holders thereon, of means for delivering said blanks to the holders by their pointed ends, a receptacle containing a liquid into which the opposite ends of said rods dip as they pass along on the conveyer, an electric circuit in which said liquid and the immersed rods are included, and means for releasing said rods from the holders after they pass out of the liquid.

11. An apparatus for heating bolt-blanks comprising a conveyer, a contact-bar arranged parallel with said conveyer, a series of metal jaws upon said conveyer and in sliding engagement with said contact-bar, said jaws being adapted to carry the bolt-blanks, a receptacle containing a liquid into which said blanks dip as they pass along with the conveyer, and an electric circuit extending through said contact-bar, jaws, bolt-blanks and liquid.

12. An apparatus for heating a series of metal rods or blanks preparatory to heading the same comprising a receptacle containing a liquid, means for extending said rods into and removing them from the liquid, a pair of parallel conductor-bars arranged within the liquid and inclined in opposite directions, and a suitable source of electricity, the opposite poles of which are connected to said bars and to the rods while in the liquid.

In testimony whereof I affix my signature in presence of two witnesses.

WILLIAM W. MULFORD.

Witnesses:
H. L. GILBERT,
W. O. HENDERSON.