US00D822996S

(12) United States Design Patent

Ehara et al.

(10) Patent No.: US D822,996 S
(45) Date of Patent: ** Jul. 17, 2018

(54) **CASE FOR ELECTRONIC DEVICE**

(71) Applicant: **NINTENDO CO., LTD.**, Kyoto (JP)

(72) Inventors: **Yui Ehara**, Kyoto (JP); **Yuko Zenri**, Kyoto (JP); **Junichiro Miyatake**, Kyoto (JP); **Tetsuya Akama**, Kyoto (JP); **Hitoshi Tsuchiya**, Kyoto (JP)

(73) Assignee: **Nintendo Co., Ltd.**, Kyoto (JP)

(**) Term: **15 Years**

(21) Appl. No.: **29/600,557**

(22) Filed: **Apr. 13, 2017**

(30) **Foreign Application Priority Data**

Dec. 29, 2016 (JP) 2016-028683

(51) **LOC (11) Cl.** **03-01**

(52) **U.S. Cl.**
USPC **D3/301**

(58) **Field of Classification Search**
USPC D3/247, 249–253, 301
CPC . A45C 11/18; A45C 11/182; A45C 2011/322; A45C 13/42
See application file for complete search history.

(56) **References Cited**

U.S. PATENT DOCUMENTS

D632,079 S * 2/2011 Spencer D3/301
D659,998 S * 5/2012 Austin D3/301
D712,144 S * 9/2014 Albanese D3/301
D739,142 S * 9/2015 Coleman D3/285
D739,655 S * 9/2015 Coleman D3/285

* cited by examiner

Primary Examiner — Holly H Baynham
(74) *Attorney, Agent, or Firm* — Nixon & Vanderhye PC

(57) **CLAIM**

The ornamental design for a case for electronic device, as shown and described.

DESCRIPTION

FIG. **1** is a front side perspective view of a case for electronic device showing our new design;
FIG. **2** is a back side perspective view thereof;
FIG. **3** is a front view thereof;
FIG. **4** is a top view thereof;
FIG. **5** is a back view thereof;
FIG. **6** is a bottom view thereof;
FIG. **7** is a right view thereof;
FIG. **8** is a left view thereof;
FIG. **9** is a perspective view **1** showing a state of this article being opened thereof; and,
FIG. **10** is a perspective view **2** showing a state of this article being opened thereof.

1 Claim, 5 Drawing Sheets

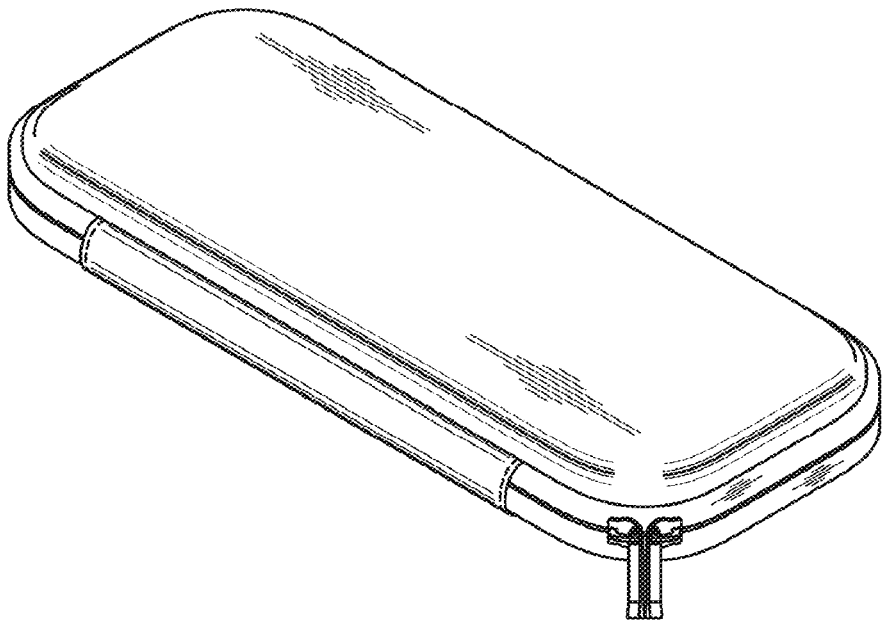

Fig.1

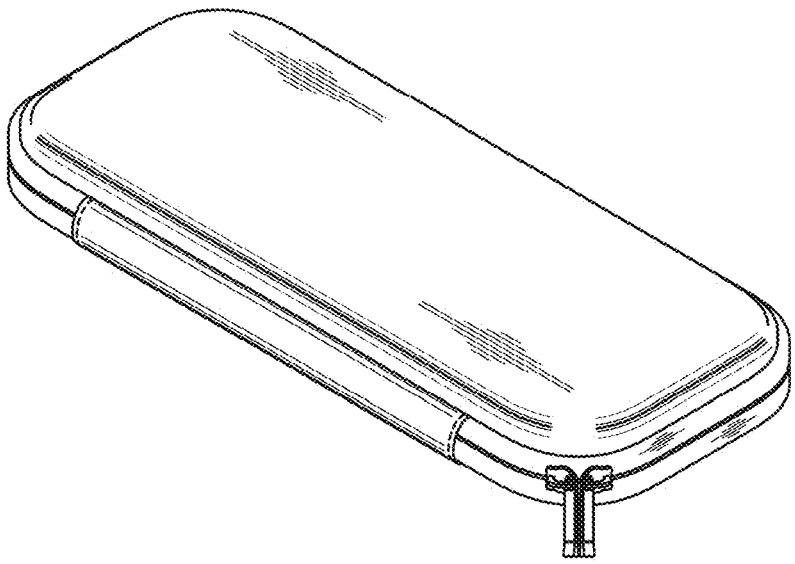

Fig.2

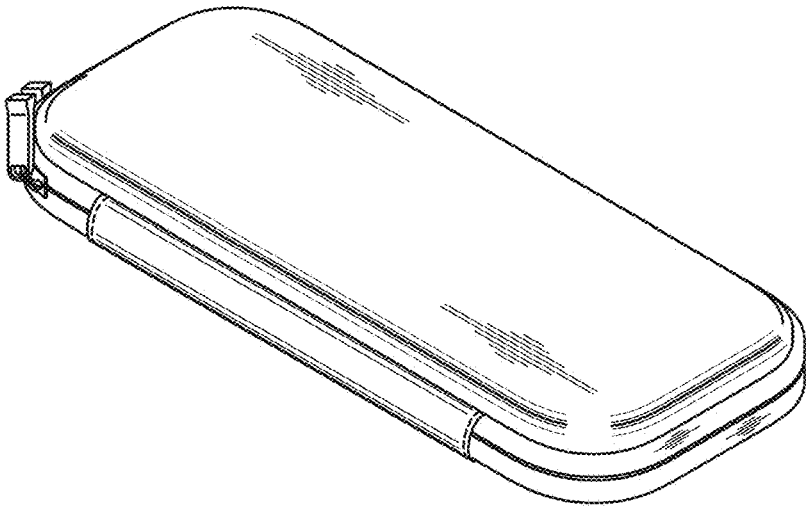

Fig.3

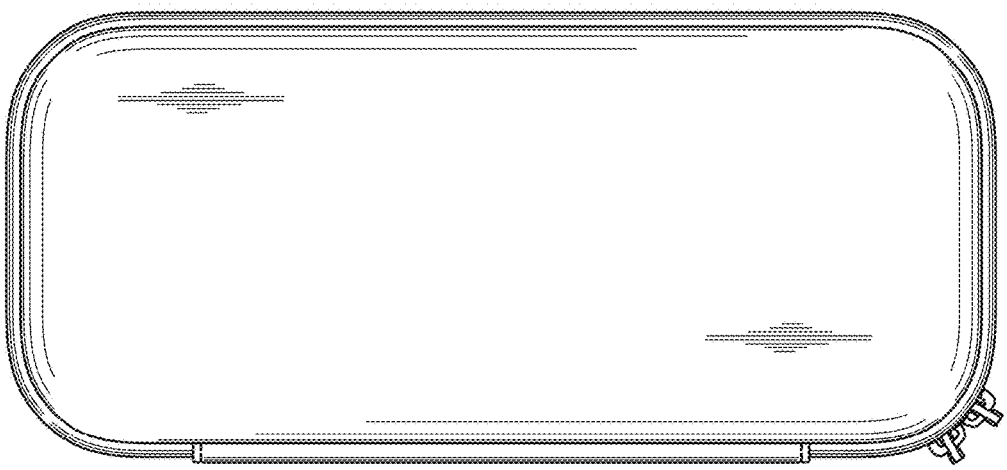

Fig.4

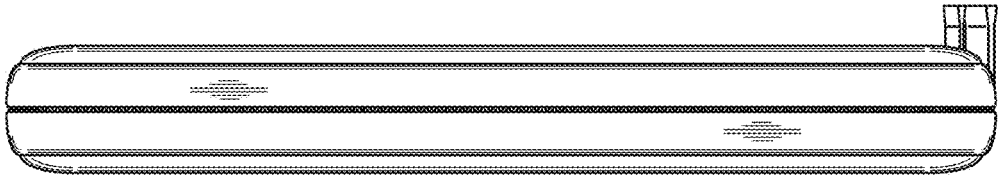

Fig.5

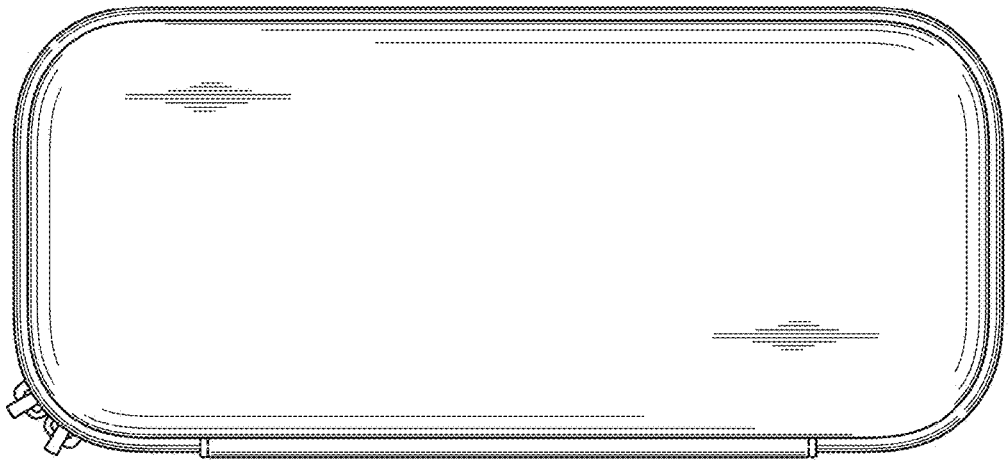

Fig.6

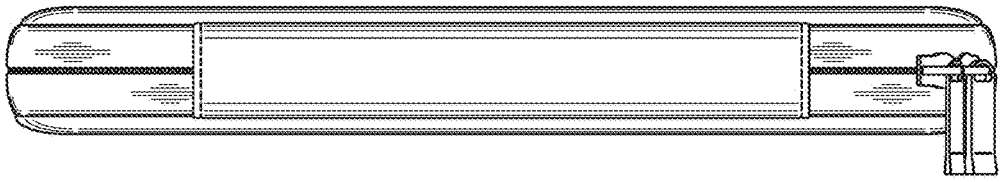

Fig.7

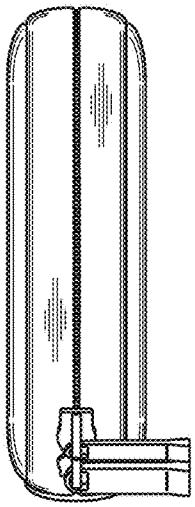

Fig.8

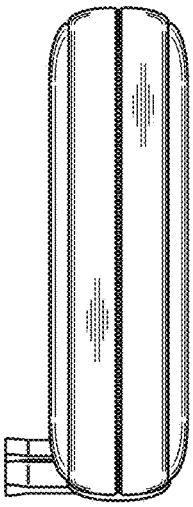

Fig.9

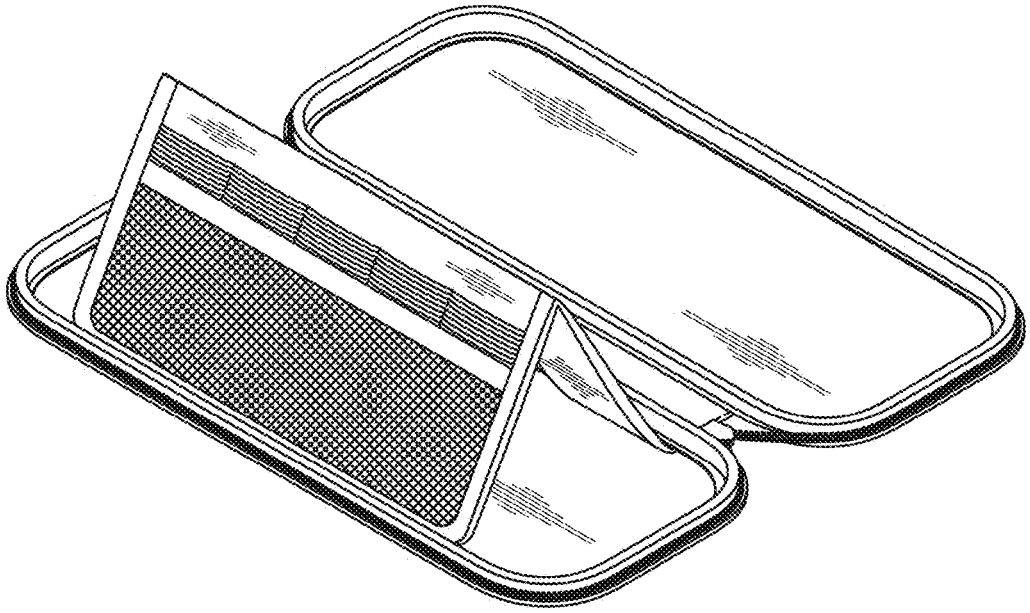

Fig.10

