Aug. 21, 1956 A. S. HURT, JR 2,759,410

ADJUSTABLE LOUVER

Filed April 19, 1954

Fig. 1

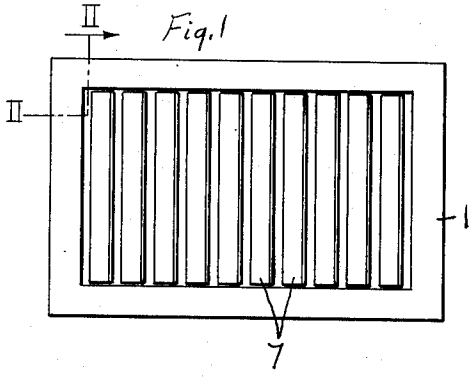

Fig. 2

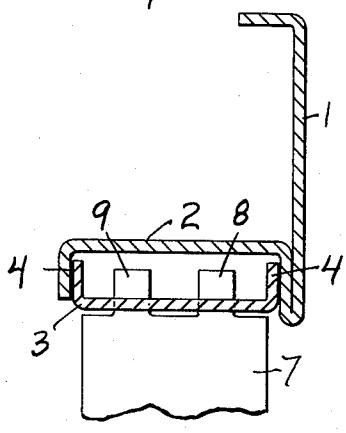

Fig. 3

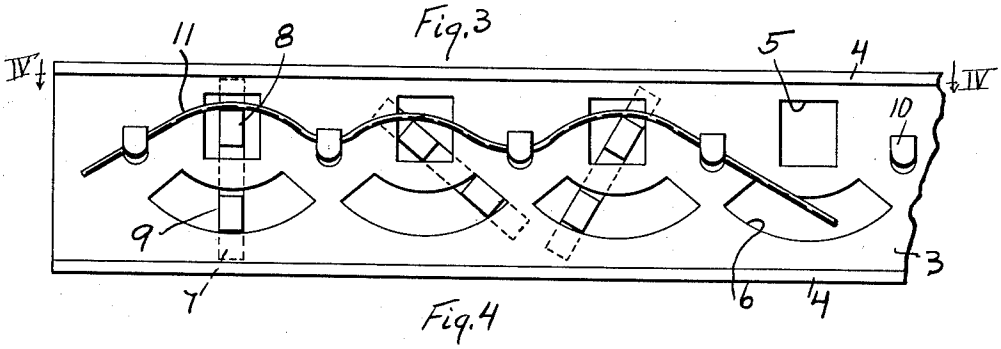

Fig. 4

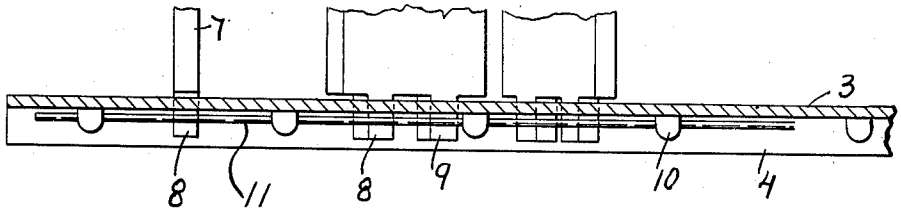

INVENTOR.
Arthur S. Hurt, Jr.
BY
Kenneth M. Thorpe
Atty.

United States Patent Office

2,759,410

Patented Aug. 21, 1956

2,759,410

ADJUSTABLE LOUVER

Arthur S. Hurt, Jr., Kansas City, Mo.

Application April 19, 1954, Serial No. 424,151

1 Claim. (Cl. 98—40)

This invention relates to adjustable louvers for use in directing the flow of air in ventilating and heating systems, and has for its general object to produce a device of this character in which the vanes can be set at any desired angle, and will remain set and will not creep from position as now occurs with some adjustable devices of this general nature.

Another object of the invention is to provide a construction in which each vane is individually adjustable so that the air can be simultaneously diverted in more than one direction if desired.

A further object of the invention is to provide a construction which is of strong, durable and inexpensive nature, and in order that it may be fully understood, reference is to be had to the accompanying drawing, in which:

Figure 1 is a face view of a register or frame opening equipped with individually positioned louvers embodying the invention.

Figure 2 is an enlarged cross section on the line II—II of Figure 1 with the resilient tensioning means omitted.

Figure 3 is a plan view of the ends of the vanes and their oscillating or swing adjustment.

Figure 4 is a section on the line IV—IV of Figure 3.

In the said drawing, where like reference characters identify corresponding parts in all of the figures, **1** is a rectangular frame member. Vanes, as hereinafter identified, are mounted between opposite sides of the frame for angular adjustment parallel to their longitudinal axes. At least one side of the frame is of channel form **2** and received within said channel in reversed relation is a second channel **3**, the edges **4** of the channel **3** forming stops to insure that on assembly of the channels **2** and **3**, a space is provided for certain operative parts as hereinafter described.

The channels **3** are formed with two sets of equi-spaced openings **5** and **6**, with the corresponding openings in the upper and lower channels **3** being axially alined. The openings **5** are of rectangular contour, while the openings **6** are arcuate as shown.

Each vane **7** may be of any desired cross section, and at least at one of its ends is formed at its opposite ends with a pair of projecting rectangular tangs **8** and **9** respectively received within the openings **5** and **6**. With this arrangement, it will be apparent that the vanes **7** can be oscillated to change their angle in accordance with the direction it is desired to divert the air.

Pressed inwardly out of the metal of upper and lower horizontal channels **3** are ears **10**, and wound in tensioned relation under the ears **10** and over the tangs **8** are spring metal strips **11**. The spring strips **11** are not rigidly

secured but are held by their tension against parts **8** and **11**. Thus, the spring strips can creep longitudinally to accommodate a change in their arcuate position as brought about by the angular adjustment of a vane, see Figure 3. It will be noted that the opening **5** receiving the tang **8** and the opening **6** receiving the tang **9**, are so located in relation to the tangs, that when a vane is in position to place its tangs at right angles to the channel **3** as shown to the left in Figure 3, tang **8** is entirely out of contact with the side of opening **5** while the tang **9** is pressed with the full force of tensioned spring **11** against the far wall or edge of the opening **6**. If the vane is swung in either direction from the position shown in the left of Figure 3, to an angular position, as the opening **5** is wider than the thickness of tang **8**, said tang under the pressure of the spring strip **11** will flop to one side or the other of the opening **5** so that at least one edge corner of both tangs **8** and **9** are pressed against the edges of their respective openings **5** and **6**. The pressure of the spring **11** in any of these angular positions is such that the tangs are jambed or so frictionally held by engagement of the tangs as described above, that their vane is held against the pressure of air flow or change in position due to spring pressure. The adjusted position of the vane can only be changed by manual means.

From the above description and drawing, it will be apparent that I have produced a construction embodying all of the features of advantage set forth as desirable, and while I have described and illustrated the preferred embodiment, it is to be understood that I reserve the right to all changes within the spirit and scope of the appended claim.

I claim:

In an adjustable louver, a pair of spaced parallel frame members, a vane perpendicular to the frame members and having its ends mounted therein for oscillation around an axis parallel to the longitudinal axis of the vane, at least one of the frame members having a rectangular opening and an arcuate opening adjacent thereto, said vane having a pair of tangs projecting from its end with one tang in each opening, the first tang being in the rectangular opening and the second tang in the arcuate opening, the distance between corresponding edges of the tangs being greater than the distance from the arcuate edge of greater radius of the arcuate opening to the closest edge thereto of the rectangular opening, the first tang being smaller in cross-section than the rectangular opening and capable of moving from one side to the other of said opening as the second tang is oscillated from end to end of the arcuate opening, a series of ears projecting from the frame member having the openings, and a spring tensioned by being wound sinuously in contact with the ears and the edge of the first tang most distant from the arcuate opening to yieldingly retain the vane in adjusted position.

References Cited in the file of this patent

UNITED STATES PATENTS

368,808	Cahill	Aug. 23, 1887
2,051,613	MacLeon	Aug. 18, 1936
2,227,360	Nelson	Dec. 31, 1940
2,646,741	Castle	July 28, 1953
2,685,246	Saunders	Aug. 3, 1954