Jan. 19, 1965 P. J. ALLEN 3,166,724

ELECTRICAL FREQUENCY SHIFTER UTILIZING FARADAY PHASE SHIFTER AND DUAL MODE COUPLER WITH ROTATABLE REFLECTION DIPOLE

Filed Nov. 24, 1961

FIG. 1

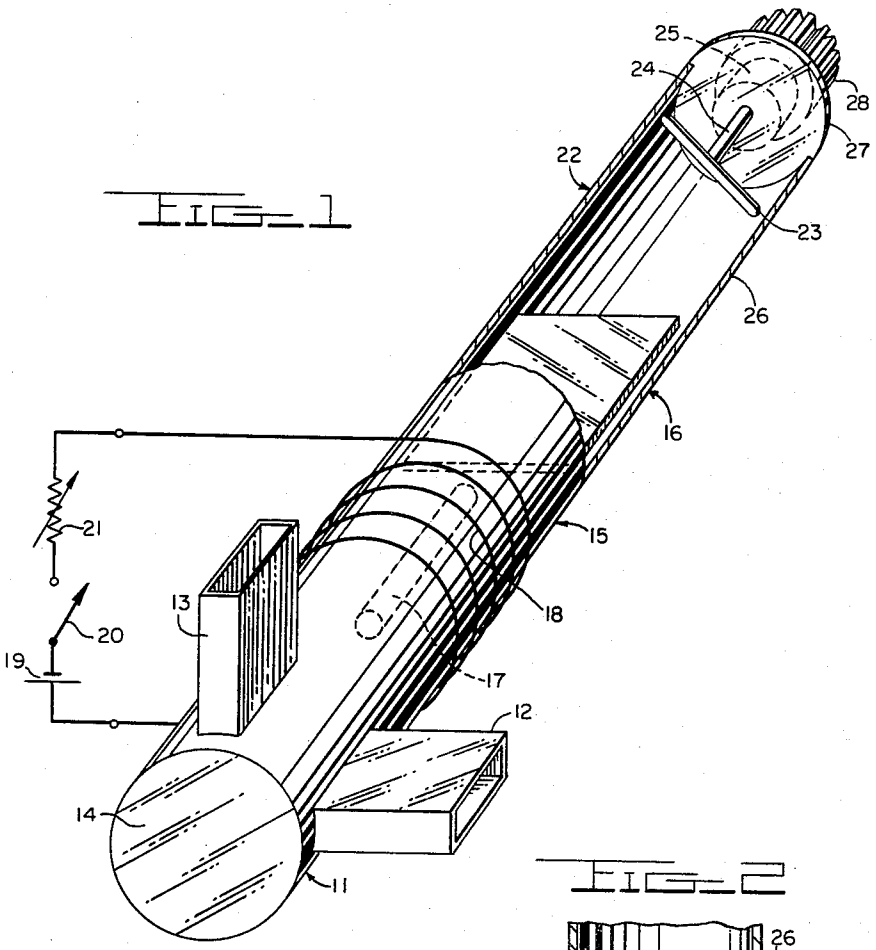

FIG. 2

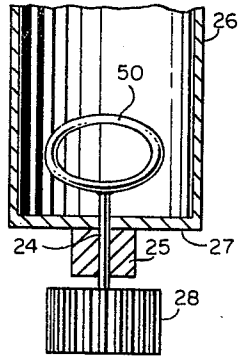

INVENTOR
PHILIP J. ALLEN

BY Shelton McAnelly, Agt
Richard C. Reed
ATTORNEY

United States Patent Office

3,166,724

Patented Jan. 19, 1965

3,166,724

ELECTRICAL FREQUENCY SHIFTER UTILIZING FARADAY PHASE SHIFTER AND DUAL MODE COUPLER WITH ROTATABLE REFLECTION DIPOLE

Philip J. Allen, North Forestville, Md.
(8000 Marion St., Washington 28, D.C.)

Filed Nov. 24, 1961, Ser. No. 154,911
6 Claims. (Cl. 333—24.1)
(Granted under Title 35, U.S. Code (1952), sec. 266)

The invention described herein may be manufactured and used by or for the Government of the United States of America for governmental purposes without the payment of any royalties thereon or therefor.

This invention relates to phase shifter and frequency translation devices for electromagnetic wave energy.

In the production and utilization of electromagnetic wave energy, it frequently is desired to produce a phase shift or a frequency shift of an electromagnetic wave in a precisely controllable manner, and in which the virtually complete elimination from the output of all traces of the original wave prior to frequency or phase shift is obtained. Devices of the foregoing type have been available in the prior art in various degrees of complexity and performance capability, however, the prior art devices all suffer various difficulties or drawbacks in apparatus complexity or inadequate elimination of the original signal or other unwanted components from the shifted output. In addition, there are instances where it is desired to produce a small amount of frequency or phase shifting of a signal with great accuracy of control over the exact amount of shift. In such instances of small shift and exact control, the mechanical phase shifter as contrasted with the electronic type frequently offers advantages. Prior art mechanical shifters have involved rather large mechanically movable components or some form of reciprocating motion in contrast to simple rotation of small members. The present invention is thus directed to an area of the art where mechanical phase shifters of simple construction and freedom from reciprocating motion are made available in an over all device having an extremely high capability of rejecting or eliminating the original unshifted signal or other unwanted components from the output.

In accordance with the foregoing, an object of the present invention is to provide a continuous phase shifter for electromagnetic wave energy in which phase can be varied without end, either advanced or retarded as desired.

Another object of the present invention is to provide a means of frequency translation or changing whereby an input electromagnetic wave signal is shifted in frequency a desired amount either above or below the input frequency as desired.

Another object of the present invention is to provide a two port continuous phase or frequency shifting device which has non-reciprocal properties in that the sense of phase shift or frequency translation is opposite for opposite directions of passage through the device.

Other and further objects and features wherein

FIG. 1 shows in partially cut-away form a typical embodiment of the feature of the present invention.

FIG. 2 shows a variation in the type of reflector device employed in FIG. 1.

In accordance with the basic teachings in the present invention, an electromagnetic wave shifting device is provided employing in combination a plurality of more or less conventional electromagnetic wave components in a novel combination. Basically, the device in its simplest form includes a dual mode coupler, a 45° Faraday rotator, a fixed quarter-wave plate and a variable 180° differential reflector. The apparatus formed from this combination of elements is basically a circular wave guide device in which

input energy is excited in either one or the other of orthogonally related planes, rotated 45° to where the plane of polarization thereof bisects the orthogonal planes, converted to circularly polarized energy, and reflected in a birefringent manner, that is, the equivalent linearly polarized components of the circularly polarized wave are reflected with differential phase shift, or path length, the difference in this case being typically 180°. The reflected wave is then passed a second time through the quarter-wave plate which transforms the circularly polarized energy into linearly polarized energy, following which it is subjected to 45° rotation of the plane of polarization by a second passage through the Faraday rotator to leave the device by a coupling port in the dual mode coupler which couples to a plane orthogonally related to that excited in the dual mode coupler by the input energy.

The birefringent or differential path length reflective device is rotated at a selected rate to produce a phase shift of the electromagnetic wave energy which is equal in magnitude to twice the angular rate of rotation of the differential reflective device. Although the result may not be apparent thus far, it may be stated simply as producing a shift of the incident energy such that the plase is advanced or retarded in dependency on the rate of rotation of the differential reflector device and the direction of such rotation relative to the sense of circularly polarized energy incident thereon. As a direct result then, input energy is either advanced or retarded in phase or shifted upward or downward in frequency, and because of the special properties as regard input and output characteristics, an extreme degree of isolation between input energy and output energy is obtained.

The device has unique properties as regards the orthogontal planes of coupling of input and output energy in that the phase or frequency change is in one sense for incident energy to one coupling plane and of the opposite sense for energy input to the other coupling plane. Inherently, this arrangement has a further desirable property, in that the apparatus is capable of operation over a wide range of frequencies and with elements having less than perfect electrical properties, because the shifting and isolation characteristics are not impaired with such adversities as would normally be expected, but rather, the imperfections in components and signals at frequency extremes produce internal elliptical polarization which can be looked upon as an internal signal or component of opposite sense of circular polarization. Because of the properties with regard to opposite sense of circular polarization coupling out of opposite orthogonal coupling ports of the dual mode coupler, the undesired sense of circular polarization is reflected to return to the input port of the device where it can be removed by some suitable prior art isolator or circulator device, or the like, without appearing in any way in the basic output coupling port. It is not to be implied or inferred from the foregoing that the same energy transmission efficiency is obtained with low quality components or at extremes of the frequency range of operation because admittedly, the losses are increased under such conditions, but basically the desired properties of readily controlled shifting and high degree of isolation so that the input shifted signal does not appear in the ouput are obtained.

Part of the desired performance of the apparatus of the present invention is a direct result of the configuration which enables certain very simple forms of 180° differential reflectors to be employed. Two embodiments of the present invention show extremely simple reflectors of small size and mass which can be driven mechanically at high rates or rates of change of rotation.

With reference now to FIG. 1 of the drawing, the apparatus shown therein is a cylindrical wave guide device containing the dual mode coupler 11 having rectangular

wave guide ports 12 and 13 which are disposed at right angles to couple to othogonally related planes within a cylindrical main portion of the dual mode coupler. The dual mode coupler 11 is of such proportions as to propagate the dominant mode of linearly polarized energy in any longitudinal plane therein being closed at one end 14 and open at the other end for connection to the 45° rotator 15. The rotator component is of cylindrical construction having its ends open for connection respectively to the dual coupler 11 and to a succeeding quarter-wave plate section 16. The 45° rotator is typically a Faraday rotator containing within a cylindrical outer member a section of ferrite material 17 which is controllably magnetized by means of a suitable flux producing device such as coil 18 which is energized by battery 19 under control of switch 20 and current limiting device 21.

The action of the rotator is to rotate the plane of polarization of the energy at the junction of the rotator 15 and the succeeding quarter-wave plate section 16 to where the plane of the linear polarization existing at that point upon application of electromagnetic wave energy to either port 12 or 13 is in the plane bisecting the orthogonal planes of the input ports 12 and 13, or the plane perpendicular thereto.

The quarter-wave plate section 16 which connects to the rotator section as just described is constructed to produce a phase shift of exit energy therefrom which is different for different planes of polarization of energy at the incident end thereof. Typically, the propagation velocity is altered within the wave guide such that the energy traversing the quarter-wave plate section is altered differentially so that energy in selected othogonal planes leaves with 90° phase difference. Typically, the quarter-wave plate is of dielectric material and is disposed at 45° relative to the plane of the exit energy from the rotator 15 for input to either port 12 or 13 and by the 90° phase alteration of the components of this wave, the wave reaches the output end of the quarter-wave plate in the form of a circularly polarized wave. The sense of polarization of this wave is opposite for incident energy applied to port 12 to that with incident energy applied to port 13.

Continuing through the device, the quater-wave plate section 16 is similarly open ended at the end opposite the rotator 15 for connection to a variable 180° differential reflector section 22. This section 22 is basically a reflector component intended to return incident energy back through the quater-wave plate section 16 and the rotator 15 to the dual mode coupler 11 for delivery as appropriate through one of the coupling ports 12 or 13. The 180° differential reflector section can assume various configurations, however, there are two configurations that have particularly desirable properties, one being the rotatable dipole section of the basic FIG. 1. This rotatable dipole section contains a dipole reflector 23 which is mounted by a suitable rotatable shaft 24 which is journaled for rotation and closure of the electromagnetic wave guide portion of the device by bearing 25. The cyclindrical wave guide 26 of the reflector is terminated by a short circuiting plate arrangement 27, the length of shaft 24 being specifically arranged to place the dipole 23 at a distance from the disc 27 equal to one-quarter of the wave length of the electromagnetic wave energy contained within the wave guide structure. As a result of this configuration the component of the circularly polarized energy which is in the plane of the dipole 23 is reflected by the dipole, whereas the component of the circularly polarized electromagnetic wave energy which is at right angles to the dipole is not acted upon by the dipole, but rather progresses to the terminating disc 27 from which point reflection occurs. It is seen, therefore, that the component of the circularly polarized energy which is perpendicular to the plane of the dipole travels approximately a half wavelength further in its reflection path than does the energy which is parallel to the dipole, which component is reflected by the dipole itself.

The result of the differential reflection is that the two orthogonal components of the circularly polarized energy incident upon the variable 180° differential reflector 22 travel back through the wave guide toward the exit ports 12 and 13 but prior to the second passage through the quarter-wave plate 16 the reflected components combine to form a single circularly polarized wave of the same sense as the wave incident on the dipole.

When the dipole 23 is rotated by means of a suitable source of motive power applied typically through a gear 28, the rotation of the dipole causes a shifting in the phase of the return energy leaving the half wavelength differential reflector. This phase is either advanced or retarded depending upon the relationship between the incident polarization sense and the direction of rotation of the dipole. For example, if right circularly polarized wave energy is incident on the dipole, as the dipole is observed from the direction of incidence, namely that of the dual mode coupler 11, if the dipole is rotated clockwise, the return wave will be retarded in phase, whereas the opposite effect, namely that of advancing phase is obtained for an opposite rotation of the dipole or an opposite incident circular polarization sense.

It is well to remark at this point that incident electromagnetic wave energy at port 12 establishes an opposite polarization sense at the input to the variable 180° differential reflector as does incident energy to the port 13. It is thus seen that the phase of energy leaving the reflector 22 is either advanced or retarded depending upon whether it is applied to port 12 or 13 in the first instance.

Return energy reaching the quarter-wave plate section 16 after the return passage through the reflector 22 is converted by the birefringent properties of the quarter-wave section 16 into linearly polarized energy at the region between the junction of the 45° rotator 15 and the quarter-wave plate section 16. At this point, then, the linearly polarized reflected energy is existent in the same plane that the incident energy to the quarter-wave plate section 16 existed. When this energy travels through the 45° rotator 15, however, it again is rotated in the same direction (but opposite direction relative to its direction of travel) which provides thus, a double 45° rotation for a total of 90°. Thus, the incident energy upon a first port, say 12, after reflection through the device of FIG. 1 reaches the dual mode coupler in such plane as to couple out of the second port 13. With the return energy thus coupling out of the opposite port from the incident energy, it is apparent that none of the return energy will go back to the input port which is typified for the moment as port 12 and because of the orthogonal coupling of the ports 12 and 13, none of the energy incident at port 12 couples directly to port 13. It is thus seen that the desirable features set forth by way of introduction are achieved with the apparatus, namely, continuous phase change amounting to a frequency change if such is desired, and there is essentially complete removal of the incident energy phasing or frequency from the output.

Thus far, the apparatus has been discussed as though the components thereof were all perfect in their performance characteristics and as though there was no frequency sensitivity or selectivity properties. It is, of course, obvious that perfect components are not obtainable, and also that any practical device will be frequency selective to some extent. Certainly, even the basic wave guide is frequency selective to some extent, because it is, of course, selected so as to propagate the dominant mode at a desired frequency or at the center of a desired band of frequencies and reject higher order modes. The device of the present invention is inherently free from seriously adverse characteristics when it is faced with practical operating limitations such as those set forth. This is primarily true because of the fact that the only significant effect of imperfect components within the normally realizable quality range or frequency range is the production of elliptically polarized energy and the reflection thereof

rather than the "pure" circularly polarized energy of unity axial ratio. The elliptically polarized wave which is, of course, characterized by different magnitude along orthogonally related major and minor axes is that it may be looked upon as a wave having circularly polarized components of opposite sense and dissimilar magnitude. With such a basic analysis and presentation, it is clear that the components of opposite sense will be shifted in frequency or phase in opposite directions. The net result is that one component will exit from the port **12** and the other component will exit from the port **13**. By appropriate arrangement of the various components, it is easy to achieve the exit of the desired component from the desired output port and the exit of the undesired component from the input port. There are many instances where the exit of this component to the input port is not particularly objectionable, however, if it is objectionable, it is a comparatively simple matter for providing apparatus to isolate and/or remove the desired component without it continuing ultimately to the source of input energy. Such could easily be done, for example, by an isolator or circulator in the connection to the input port **12** in which source energy goes to the port **12** but return energy from port **12** does not return to the source, but rather is absorbed. Such devices are, of course, well known in the art as of the present state thereof and further elaboration at this point which is not essential to the practice of the present invention is, of course, unnecessary.

The apparatus of FIG. 1 can be extended in utility to higher powers of operation when required than that limited by voltage breakdown or arcing at the dipole by employing a different form of variable half wave differential reflector. The dipole **23** of FIG. 1 is, as mentioned, totally reflective to the energy component in the plane thereof, and as to such reflection is not sharply resonant or narrowly frequency selective. Thus, the actual length dimension of the dipole is not extremely critical, however, it is desired that it be sufficient in extent to where it effectively reflects all energy contained within the wave guide in the selected plane. Normally, to achieve such a total reflection, the ends of the dipole will approach fairly closely the cylindrical walls of the basic assembly. This does, then, afford a voltage breakdown problem when the device is operated at high power levels because of the possibility that arcing will occur between the ends of the dipole and the cylindrical structure of the wave guide. To avoid the high voltage buildup causing such arcing, it is possible to employ a differential reflector having principal response to the magnetic field in the wave guide rather than the electrostatic field by the placement of a loop or shorted turn on the end of the rod **24**, rather than the dipole. Such an arrangement is shown in FIG. 2, to which attention is now directed.

The apparatus of FIG. 2 contains components which in general correspond to the similar portions of FIG. 1, however, a shorted loop **50** is shown attached to the rod **24** rather than the dipole **23** of FIG. 1. The loop or shorted turn links the magnetic field contained within the wave guide in amount dependent upon the orientation of the field relative to the plane of the loop. Thus, like the electrostatic field responsive dipole, the loop is differentially responsive to energy in the orthogonal planes parallel to and perpendicular to the loop. Thus, it becomes necessary merely to locate the loop relative to the end termination disc **27** to where it effectively is located a quarter-wave length as measured in the wave guide from the effective position of the short circuit terminating disc. Since the short circuited turn arrangement avoids the buildup of high voltage conditions which characterize the dipole, the voltage breakdown or arcing conditions are avoided.

Obviously, many modifications and variations of the present invention are possible in the light of the above teachings. It is therefore to be understood that within the scope of the appended claims the invention may be practiced otherwise than as specifically described.

What is claimed is:

1. An electrical signal shifter device comprising, a dual mode coupler having first and second ports coupling to orthogonal planes therein, a 45° Faraday rotator connected to said coupler, a 90° birefringent device connected to said rotator, said device being characterized by 90 degree differential phasing in the orthogonal planes of the dual mode coupler, a 180° differential reflector connected to said birefringent device for reflecting energy back through said birefringent device with 180° differential phasing in orthogonal planes, and means for adjusting the position of the orthogonal planes of the differential reflector, whereby output energy is obtained at one port of the dual mode coupler in response to energy of appropriate wavelength for transmission through the device applied to the other port of the dual mode coupler and with relative shifting controllable by the adjustment of said means.

2. An electrical signal shifter device comprising, a dual mode coupler having first and second ports coupling to orthogonal planes therein, a 45° Faraday rotator connected to said coupler, a 90° birefringent device connected to said rotator, said device being characterized by 90 degree differential phasing in the orthogonal planes of the dual mode coupler, a short circuited section of waveguide connected to said birefringent device operative to reflect energy back through said birefringent device, said waveguide section containing a rotatable dipole spaced a quarter wave from the short circuit of said waveguide whereby reflection with 180° phase difference in orthogonal planes occurs, and means for adjusting the position of the orthogonal planes of the differential reflector, whereby output energy is obtained at one port of the dual mode coupler in response to energy of appropriate wavelength for transmission through the device applied to the other port of the dual mode coupler and with relative shifting controllable by the adjustment of said means.

3. An electrical signal shifter device comprising, a dual mode coupler having first and second ports coupling to orthogonal planes therein, a 45° Faraday rotator connected to said coupler, a 90° birefringent device connected to said rotator, said device being characterized by 90 degree differential phasing in the orthogonal planes of the dual mode coupler, a short circuited section of waveguide connected to said birefringent device operative to reflect energy back through said birefringent device, said waveguide section containing a shorted loop linking the electromagnetic field in a selected plane of said waveguide section operative to reflect energy in the plane with 180 degree phase relationship to the energy reflected in an orthogonal plane, and means for adjusting the position of the orthogonal planes of the differential reflector, whereby output energy is obtained at one port of the dual mode coupler in response to energy of appropriate wavelength for transmission through the device applied to the other port of the dual mode coupler and with relative shifting controllable by the adjustment of said means.

4. An electrical signal shifter device comprising, a dual mode coupler having first and second ports coupling to orthogonal planes therein, a 45° Faraday rotator connected to said coupler, a 90° birefringent device connected to said rotator, said device being characterized by 90 degree differential phasing in the orthogonal planes of the dual mode coupler, a short circuited section of waveguide connected to said birefringent device operative to reflect energy back through said birefringent device, said waveguide section containing a rotatable dipole spaced a quarter wave from the short circuit of said waveguide whereby reflection with 180 degree phase difference in orthogonal planes occurs, and means for continuously rotating said orthogonal planes of the differential reflector at a selectable rate whereby output energy is obtained at one port of the dual mode coupler in response to energy of ap-

propriate wavelength for transmission through the device applied to the other port of the dual mode coupler and with relative shifting proportional to the rate of rotation of said differential reflector orthogonal planes.

5. An electrical signal shifter device comprising, a dual mode coupler having first and second ports coupling to orthogonal planes therein, a 45° Faraday rotator connected to said coupler, a 90° birefringent device connected to said rotator, said device being characterized by 90 degree differential phasing in the orthogonal planes of the dual mode coupler, a short circuited section of waveguide connected to said birefringent device operative to reflect energy back through said birefringent device, said waveguide section containing a rotatable dipole spaced a quarter wave from the short circuit of said waveguide whereby reflection with 180 degree phase difference in orthogonal planes occurs, and means for continuously rotating said dipole at a selected rate whereby output energy is obtained at one port of the dual mode coupler in response to energy of appropriate wavelength for transmission through the device applied to the other port of the dual mode coupler and with relative shifting proportional to the rate of rotation of said dipole.

6. An electrical signal shifter device comprising, a dual mode coupler having first and second ports coupling to orthogonal planes therein, a 45° Faraday rotator connected to said coupler, a 90° birefringent device connected to said rotator, said device being characterized by 90 degree differential phasing in the orthogonal planes of the dual mode coupler, a short circuited section of waveguide connected to said birefringent device operative to reflect energy back through said birefringent device, said

waveguide section containing a shorted loop linking the electromagnetic field in a selected plane of said waveguide section operative to reflect energy in the plane with 180 degree phase relationship to the energy reflected in an orthogonal plane, and means for continuously rotating said shorted loop at a selected rate whereby output energy is obtained at one port of the dual mode coupler in reponse to energy of appropriate wavelength for transmission through the device applied to the other port of the dual mode coupler and with relative shifting proportional to the rate of rotation of said shorted loop.

References Cited by the Examiner

UNITED STATES PATENTS

2,530,818	11/50	Fox	333—21
2,930,040	4/60	Weil	343—756
2,953,786	9/60	Krause	343—756
3,058,049	10/62	O'Hara	333—24.1
3,089,104	5/63	Allen	333—24.1
3,100,287	8/63	Scharfman	333—24.1

FOREIGN PATENTS

209,540	7/57	Austria.
777,341	6/57	Great Britain.

OTHER REFERENCES

Scharfman: Proceedings of the IRE, Ferrite Phase Shifters, vol. 44, No. 10, October 1956, pages 1457 and 1459.

HERMAN KARL SAALBACH, *Primary Examiner.*