33-247. OR 1,240,300 SR

R. M. BLAIR.

SIGHT FOR FIREARMS.

APPLICATION FILED JUNE 26, 1916.

1,240,300. Patented Sept. 18, 1917.

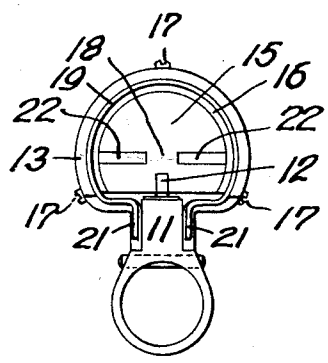

FIG. 1.

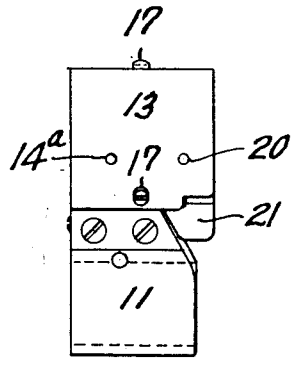

FIG. 2.

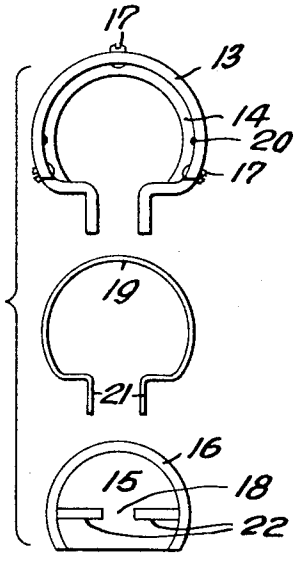

FIG. 4.

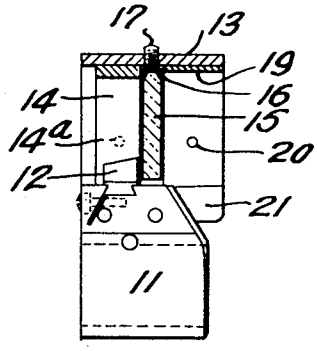

FIG. 3.

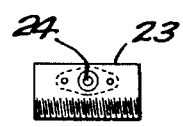

FIG. 5.



FIG. 6.

Witnesses

G. M. Moreland

Inventor
R. M. Blair
By Fetherstonhaugh & Co
Attys

GEOMETRICAL INSTRUMENT CO.

UNITED STATES PATENT OFFICE.

ROBERT M. BLAIR, OF QUEBEC, QUEBEC, CANADA.

SIGHT FOR FIREARMS.

1,240,300. Specification of Letters Patent. Patented Sept. 18, 1917.

Application filed June 26, 1916. Serial No. 105,960.

To all whom it may concern:

Be it known that I, ROBERT M. BLAIR, a subject of the King of Great Britain, and resident of the city of Quebec, in the Province of Quebec and Dominion of Canada, have invented certain new and useful Improvements in Sights for Firearms, of which the following is a full, clear, and exact description.

This invention relates to improvements in sights for rifles and the like, and the object of the invention is to provide devices for attachment to the existing sights of a rifle, which will greatly aid the shooter in training his weapon on a given target.

A further object is to provide a device in the nature of a telescope sight, particularly adapted for rapid shooting at moving objects, such as is done by sharpshooters on active service or by experienced hunters.

Still another object is to provide a device which utilizes the ordinary sights of the rifle and amplifies their efficiency, and which may be very easily and quickly dismantled so as to permit of sighting in the ordinary manner.

The principle upon which this improved sight depends is that instead of looking through or over the rear sight at the target, and then bringing the front sight into alinement with a desired part of the target, thus obscuring the target up to or slightly above the point aimed at, a clear unobstructed field of suitable size is defined in the fore sight, through which the line of vision from the shooter's eye passes to the target. In accordance with one of the previously enumerated objects of the invention, this clear space is defined partly by the fore sight and partly by means hereinafter described. By mounting suitable lenses in the rear sight and fore sight, the target may be enlarged and much better definition secured thereby, enabling the shooter to take better aim. These lenses are, however, arranged in such a manner that they may be very rapidly removed if the telescopic sight is not required. In the case of the telescope sight, the lens of the fore sight is adjustable, so that the optical center thereof coincides with the center of the clear space, through which the line of sight passes. This fact particularly aids the shooter, as the mere fact that a lens is used draws the shooter's vision to the center. The means for defining the unobstructed area through which sight is taken is a pair of horizontal bars radially disposed in the sight, and arranged so that a horizontal line drawn between them will intersect the vertically projected axis of the fore sight exactly at the optical center of the lens.

In the drawings which illustrate the invention:—

Figure 1 is a rear elevation of a fore sight arranged according to this invention.

Fig. 2 is a side elevation thereof.

Fig. 3 is a central vertical longitudinal section.

Fig. 4 is a rear elevation illustrating the component parts of the fore sight.

Fig. 5 is an elevation of the rear sight slide.

Fig. 6 is an elevation showing a slight modification.

Referring more particularly to the drawings, 11 designates the fore sight of a rifle having a blade 12 over which the sight is taken. In many types of sight, for example, the service sight of British and Canadian army rifles, the sight is protected by a short tubular housing. According to this invention, such housing is formed as indicated by the part 13, and is rigidly, and for practical purposes, permanently attached to the fore sight and forms in effect a part thereof. The forward end of this housing contains a sleeve 14 which may be retained by pins or upset projections 15 on the housing. The rear end of this sleeve is in line with or very slightly behind the rear end of the sight blade 12. A lens 15 mounted in a suitable frame or bezel 16 fits loosely within the housing, and may be adjusted by means of screws 17 so as to bring the optical center 18 thereof a suitable distance centrally above the sight blade 12. The lens is retained by a spring sleeve 19 fitting within the rear end of the housing and held against movement by engagement with pins or upset projections 20 of the housing. This spring sleeve is provided with spaced wings 21 lying in the plane of the fore sight, and adapted to be pinched together to contract the sleeve and enable its withdrawal from the housing for the purpose of removing the lens. In order to define the unobstructed field through which sight is taken, radially disposed opaque portions 22 are provided, each preferably terminating the same distance from the center of the clear field as

the top of the sight blade 12. Any suitable number of these opaque portions 22 may be provided, but it has been found that for general purposes, two horizontally disposed portions in addition to the sight blade, give the best results. As, however, eyes differ very greatly, it is possible that there will be persons who will find an additional vertically disposed portion above the sight blade, as shown in Fig. 6, an assistance. Ordinarily, the ends of these opaque portions may be blunt or at right angles to the axis, but if desired, the ends may be tapered, as shown in Fig. 6. It has been found, however, that the blunt ends give quite as good results as the tapered ends, and with many people, much better results. These opaque portions may be produced in a number of ways, for example, where a lens is used, portions of the surface may be roughened by grinding, and the roughened portion covered with black paint or other composition. However, if desired, the opaque portions may be prongs projecting from a frame, which may be the frame 16 of the lens, or a separate frame designed to occupy the same position if no lens is used.

The operation of the sight is extremely simple. The housing is of sufficient size so that the shooter can command a considerable field through the upper part of the lens, thus enabling an object, especially if moving, to be very readily located even at comparatively short range. The action of the lenses tends to draw the line of sight through the optical center of the lens, which is centered between the ends of the opaque portions or bars 22, and the sight blade, so that the shooter instinctively moves the gun to bring the object into this field where the vision is clearest and all eye strain eliminated. In the use of this sight, it is found that any shifting of the gun, which renders the target partly obscured by the opaque bars 22 or the sight blade, causes an instinctive and almost unconscious movement of the gun to bring the target back into the clear field where it can be seen without any eye strain. This movement may be likened to the unconscious angular adjustment of the human eye in looking at an object while the looker is in movement, and is entirely different from the mental and ocular exertion necessary to hold an ordinary sight on a target. With the bead or cross wire fore sights, whether plain or telescope, the aim is usually obtained when the bead is at or slightly above the lower edge of the target or the intersection of the wires is similarly located. The basic principle behind all sighting is that the shooter looks at the exact point where he desires to place a bullet, and then alines the gun barrel by bringing the sights into predetermined relation with this line of vision. If the sights enter the line of vision, the spot at which the shooter was looking becomes obscured and there is a constant desire to adjust the gun until this spot again becomes visible. In other words, as soon as the spot becomes obscured, it requires exertion of the eyes and mental calculation to determine the exact amount of the object which has been obscured by the sight, or the most suitable relation between the spot and top of the fore sight, which relation will vary between shots according to changes of light and fatigue of the eyes, which results in the moving back and forth of the gun in an effort to determine this amount or relation, and to ascertain if there has not been some slight unconscious movement of the gun. It would seem on casual consideration that it would be very easy to hold a sight in the proper relation to a range target bull's eye, but as a matter of fact, the eye is constantly straying from the sight to the bull's-eye and gaging distances. With the cross wire sights, the amount of obscurement is of course greater unless the wires are very fine. It has, however, been found that fine wires frequently become invisible, and are therefore not practical. The action with this sight is exactly the opposite. When the perfect aim is obtained, the spot aimed at is most clearly visible and is centered between the ends of the bars and the sight blade. Any movement of the gun which destroys this alinement causes uneasiness to the shooter's eye, and if sufficient, results in the obscurement of some portion of the target. It will therefore be seen that the effect of this sight is exactly the opposite of the effect produced by the ordinary sights. The bars or opaque portions, as well as the sight blade, may be of considerable size as indicated in the drawings, thus rendering the obscurement caused by imperfect sighting so great that the shooter is practically compelled to correct his aim. If the spot aimed at is seen in the large open space above the horizontal bars, where there is nothing to aim by, the shooter instinctively moves the gun to bring the mark into the defined space. The horizontal disposition of the bars 22 aids in holding the gun plumb.

When it is desired to eliminate the telescope feature, the sleeve 19 is removed and the lens slipped out of the housing, the sleeve being replaced for safety. The sight now becomes an ordinary bead or blade sight. If the bars 22 are formed separate from the lens, they may be retained, thus keeping the feature of a defined clear space through which sight is taken, but without the aid of the telescope. Fig. 5 shows a slide 23 for the rear sight having a lens 24 which coöperates with the lens 15 in producing the telescope. A great many rifles

of to-day, particularly military rifles, are already provided with a rear peepsight, so that by providing a slide to fit the rear sight, no changes are necessary in the adjustment of the sights or rifle. It will be seen that the device may be adapted to practically any of the sights at present in use in such a way as to permit the use of the sights either as telescope or as ordinary open sights. The device is extremely simple and sufficiently durable for active military or sporting use, where its effectiveness will be fully as great as for target shooting.

Having thus described my invention, what I claim is:

1. An attachment for firearms comprising a sight, and means appearing to the shooter as substantially opaque bars, said means cooperating with the sight to define an unobstructed area through which the line of sight is taken.

2. An attachment for firearms comprising a sight, a housing therefor, and means in the housing coöperating with the sight to define a clear area through which the line of sight is taken.

3. An attachment for the fore sight of a firearm, comprising a housing over the sight, and opaque bars in the housing coöperating with the sight to define a clear space through which the line of sight is taken.

4. An attachment for the fore sight of a firearm, comprising a housing attached to the sight, and radially disposed bars removably mounted in the housing and converging with the fore sight toward a given point through which the line of sight is taken, all of said bars and the fore sight terminating short of such given point, whereby a clear sighting space is formed.

5. An attachment for the fore sight of a firearm comprising a housing secured to the fore sight, bars in said housing arranged with their common longitudinal axis intersecting the vertical axis of the fore sight, said bars and fore sight terminating short of said point of intersection, and a lens mounted in the housing having its optical axis passing through said point of intersection.

6. A sight for firearms, comprising a sight having a blade, a housing, bars in said housing, said bars converging with the sight toward a common point, a lens removably mounted in the housing, and means for adjusting the lens whereby its optical axis will pass through the point to which said bars and sight converge.

7. A sight for firearms, comprising the combination with a sight blade of a housing, a lens in said housing, and a plurality of opaque bars in the housing coöperating with the sight blade to define a clear area on said lens concentric with the optical axis thereof.

8. A sighting apparatus for firearms, comprising the combination with a front sight blade, a rear sight, of a housing over the front sight, a lens in said housing, opaque bars in the housing converging with the sight blade toward the optical center of the lens and stopping short of said center, and a lens bearing slide for the rear sight in such focal arrangement with the lens of the fore sight that a telescope is produced.

9. An attachment for the fore sight of firearms, comprising a housing rigidly secured to the fore sight, a lens therein, having its optical center located a suitable distance above the fore sight, means for adjusting the lens relative to the fore sight, a collar in the forward end of said housing against which the lens abuts, a spring sleeve in the rear end of said housing retaining the lens in abutting relation with said collar, pins on the housing holding said sleeve in position, and wings on the sleeve whereby the same may be contracted to disengage from the pins.

In witness whereof, I have hereunto set my hand, in the presence of two witnesses.

ROBERT M. BLAIR.

Witnesses:
S. R. W. ALLEN,
C. W. TAYLOR.

Copies of this patent may be obtained for five cents each, by addressing the "Commissioner of Patents, Washington, D. C."