March 2, 1943. S. F. ARMINGTON ET AL 2,312,311

SCRAPER

Filed Dec. 21, 1940 4 Sheets-Sheet 1

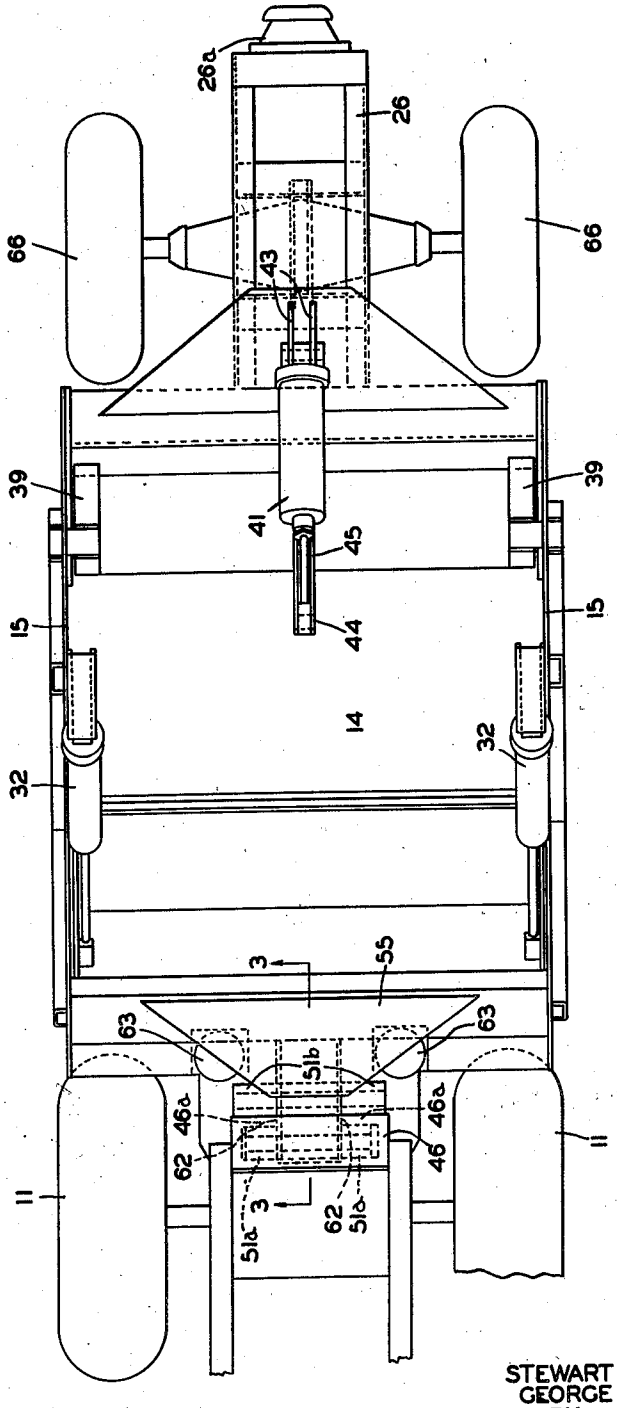

FIG. 1

INVENTORS
STEWART F. ARMINGTON
GEORGE E. ARMINGTON
BY
Hyde and Meyer
ATTORNEYS

March 2, 1943. S. F. ARMINGTON ET AL 2,312,311

SCRAPER

Filed Dec. 21, 1940 4 Sheets-Sheet 2

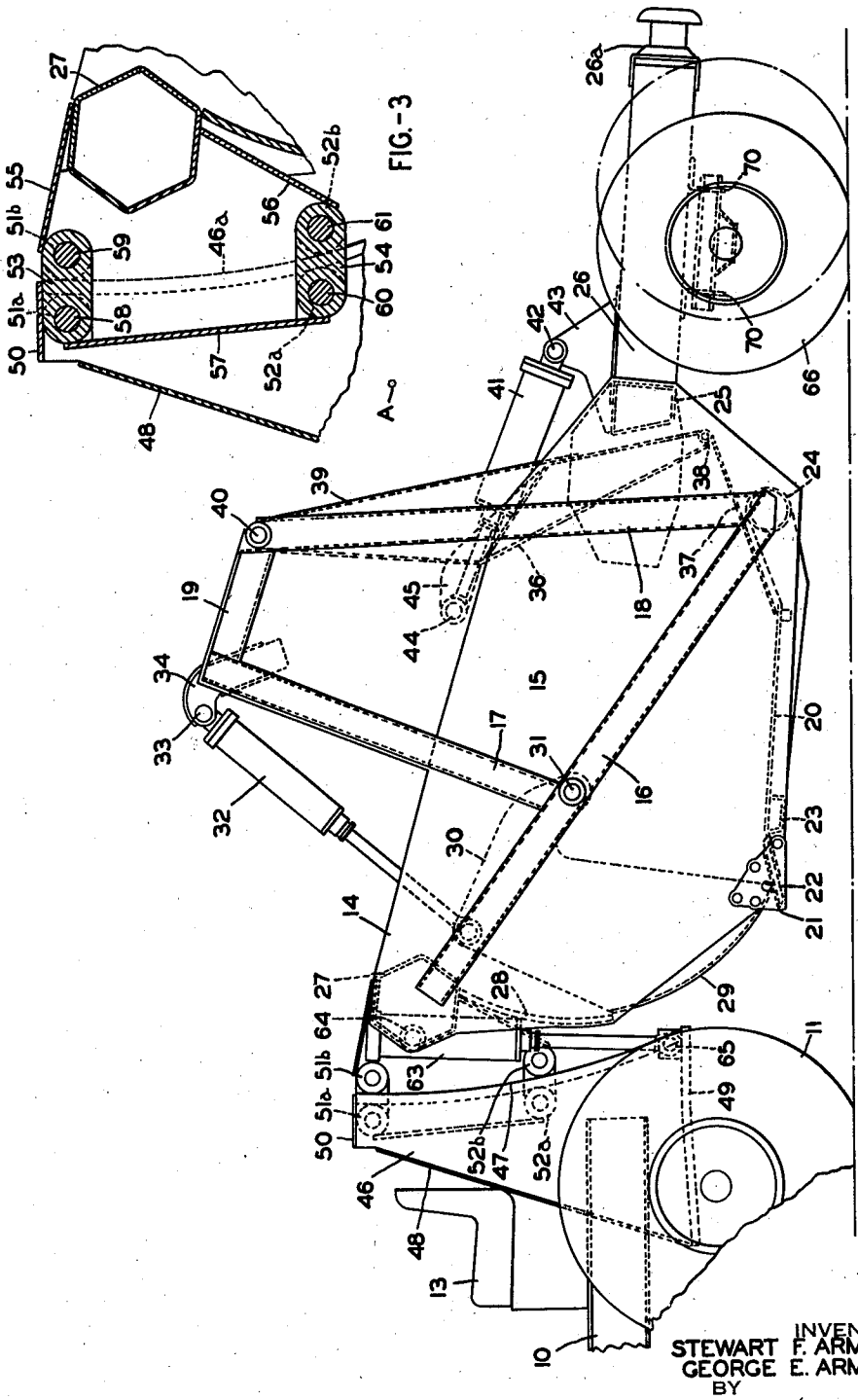

INVENTORS
STEWART F. ARMINGTON
GEORGE E. ARMINGTON
BY
Hyde and Meyer
ATTORNEYS

March 2, 1943. S. F. ARMINGTON ET AL 2,312,311

SCRAPER

Filed Dec. 21, 1940 4 Sheets-Sheet 3

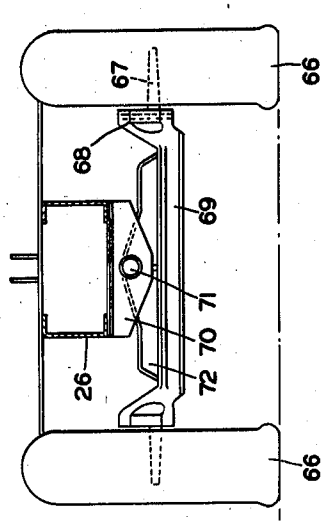

FIG.-5

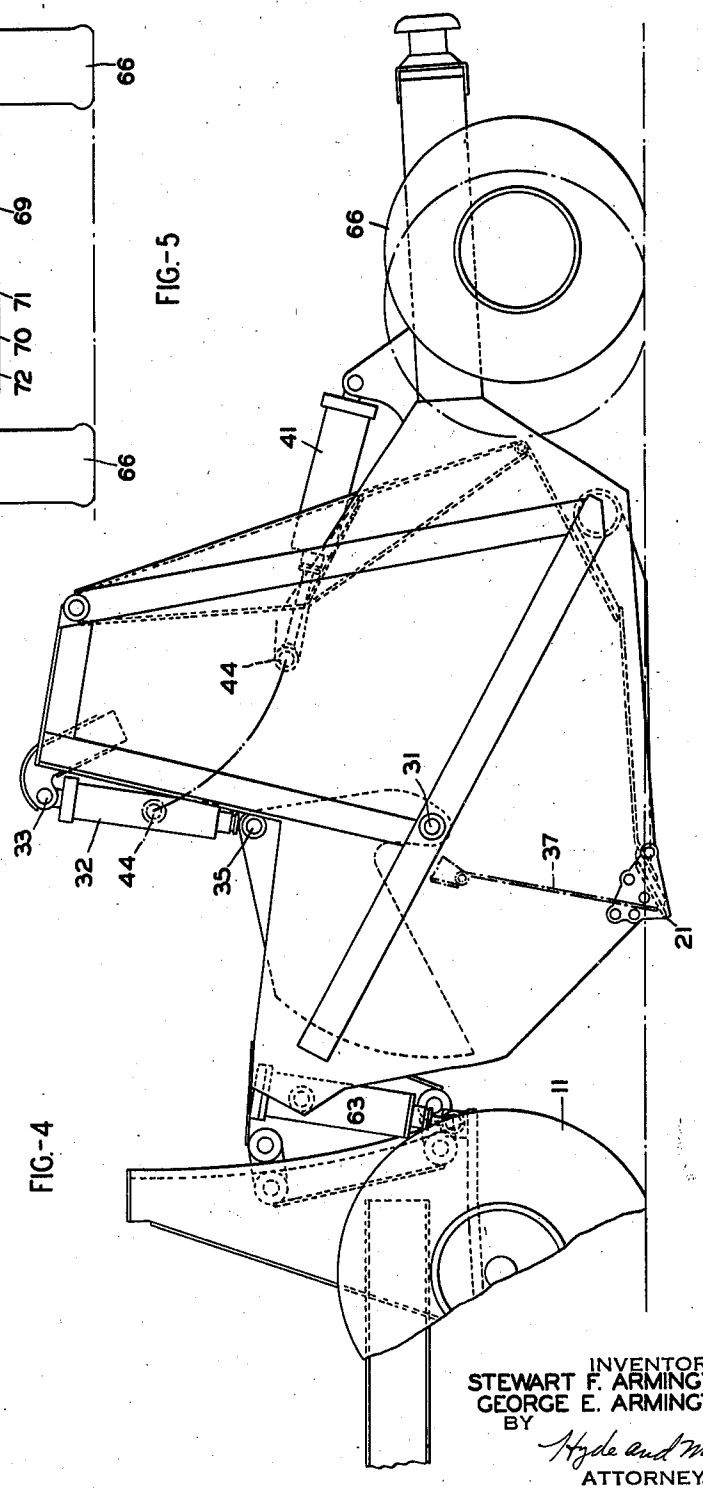

FIG.-4

INVENTORS
STEWART F. ARMINGTON
GEORGE E. ARMINGTON
BY
Hyde and Meyer
ATTORNEYS

March 2, 1943. S. F. ARMINGTON ET AL 2,312,311

SCRAPER

Filed Dec. 21, 1940 4 Sheets-Sheet 4

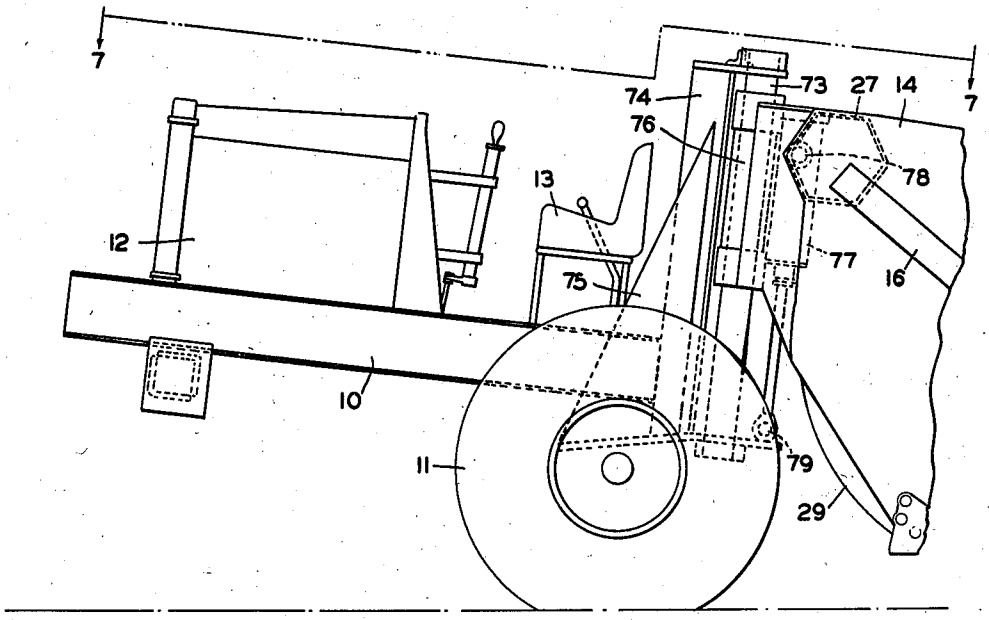

FIG.-6

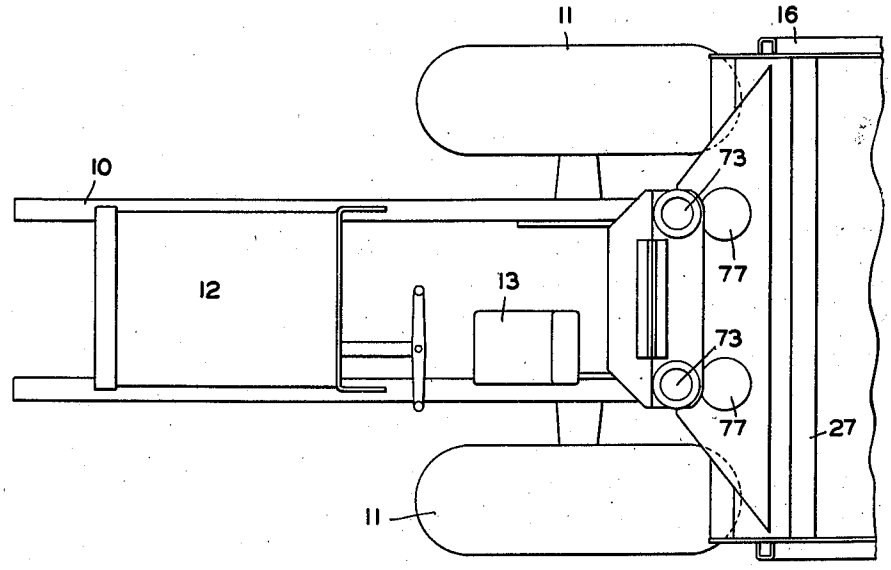

FIG.-7

INVENTORS
STEWART F. ARMINGTON
GEORGE E. ARMINGTON
BY
Hyde and Meyer
ATTORNEYS

Patented Mar. 2, 1943 2,312,311

UNITED STATES PATENT OFFICE

2,312,311

SCRAPER

Stewart F. Armington, Willoughby, and George E. Armington, South Euclid, Ohio, assignors to The Euclid Road Machinery Company, Euclid, Ohio, a corporation of Ohio

Application December 21, 1940, Serial No. 371,192

6 Claims. (Cl. 37—126)

This invention relates to improvements in earth moving apparatus of the type comprising a digging scoop or scraper having a wheeled support and adapted to load itself with material, to transport this material and to discharge it where desired.

One of the objects of the present invention is to provide a novel connection between the scoop and the tractor means whereby the digging edge of the scoop is raised and lowered. This novel arrangement may include means for lengthening the wheel base of the composite vehicle while loading the scoop and for shortening the wheel base while transporting material in the scoop, thus enhancing the maneuverability of the device.

Another object of the present invention is to provide a novel support means for a scoop whereby the forward end of the scoop is adapted to be raised and lowered with respect to a tractor means by way of a connection which gives substantial rigidity between the tractor means and the scoop in any of its adjusted positions while at the same time providing a novel tilting connection between the rear wheel means and the scoop or a projection thereof.

Another object of the invention is to provide a rigid scoop and a projection rigid therewith and extending to the extreme rear of the structure so that a pushing vehicle may apply a direct thrust at the point where the digging action takes place.

Other advantages of the present invention include scoop side wall structure giving rigidity to the scoop generally and providing pivot points for a front gate actuating jack so as to provide novel operating features there and a pivot point for a material ejector gate which together with the operating jack provide novel characteristics of this feature.

Other objects and advantages will appear from the accompanying drawings and description and the essential features will be set forth in the claims.

In the drawings, Fig. 1 is a top plan view of a machine embodying our invention; Fig. 2 is a side elevation thereof; Fig. 3 is an enlarged fragmental sectional view taken along the line 3—3 of Fig. 1; Fig. 4 is a side elevational view similar to Fig. 2 but showing another position of the parts; Fig. 5 is an end elevational view of the device shown in Figs. 1 to 4; while Figs. 6 and 7 are views of the forward end of a modified structure.

The form of our device shown in Figs. 1 to 5 includes a tractor device comprising a frame 10 supported by a pair of wheels 11, the frame carrying at its forward end a power unit, such as the internal combustion engine 12 shown in Figs. 6 and 7 although not shown in the first modification because of the limitations of the drawings. This engine has a drive connection with the wheels 11 and the tractor device is provided with an operator seat 13 and suitable control levers for the engine and for the control of the scraper parts although the details of such control connections are not shown because they are well known in this art and form no part of the present invention.

To the rear of the tractor device is provided a scoop 14 having side walls 15 comprising flat plates reinforced on the outside by several channels which have their flanges welded to the side wall plates in the positions shown in the various views. For instance along each side wall and extending diagonally from the upper front end to the lower rear end is a channel 16 and extending upwardly therefrom is a channel 17 which connects with the channels 16 at approximately the pivot point for the front gate. Another channel 18 extends almost vertically upward from the rear end of the channel 16. These in turn are connected at their top rigidly by a channel 19. Preferably the side wall plate 15 extends up to the top channel member 19 along the projecting portion of the side walls defined by the channels 17, 18 and 19. The scoop has a bottom plate 20 ending at its forward end in a digging edge 21 which is reinforced at the side walls by the digging corners 22. A hollow beam 23 extends between the side walls 15 just back of the digging edge of the scoop so as to reinforce it there. At the lower rear portion of the side walls they are connected by the circular beam member 24 and at a higher and rearward point therefrom a hollow beam 25 of quadrilateral section ties together the side walls of the scoop and provides a rigid mounting for a rearwardly extending projection 26, several functions of which will be later described. At the upper forward end of the side walls they are tied together by a hollow beam 27 of hexagonal section, thus giving a very rigid scoop structure.

The forward end of the scoop is normally open when digging and is closed partially by a fixed curved plate 28 secured between the side walls 15 and at its upper end to the hexagonal beam 27. A movable curved plate 29 is connected adjacent the side walls of the scoop by plates 30 to a pivotal mounting at points 31 on opposite side walls of the scoop. Means is provided for raising and lowering the front gate 29 between the closed position of Fig. 2 and the open position of Fig. 4 by a jack 32 whose cylinder is pivotally connected at 33

to a bracket 34 carried by the upstanding projection of each side wall. Each jack piston rod is pivotally connected at 35 with one of the front gate end plates 30. Means not shown is provided under the control of the tractor operator for supplying fluid to jack 32 to raise and lower the front gate as required.

It will be apparent from a consideration of the position of jacks 32 and the front gate in Figs. 2 and 4, that the arrangement here shown whereby the points 33, 35 and 31 are approximately in line as in Fig. 4 when the front gate is open so that the arm 35—31 is moved to approximately a right angle position relative to jack 32 when the gate is closed as in Fig. 2, gives a very efficient operation of the front gate. In other words it moves faster and with less power when starting to close the gate as in Fig. 4 and slower and with more power as the gate finally closes against the digging edge 21 as in Fig. 2, at which time more power is necessary to cut through the loose material at the digging edge.

The scoop here shown is of the type utilizing an ejector gate 36 for pushing material out of the scoop to discharge it when the front gate is open. The ejector gate here shown is of the type having a bottom flap 37 pivotally connected to the ejector gate proper at 38 so as to clean the bottom of the scoop more efficiently and with less use of power. The ejector gate is supported by arms 39 adjacent each side wall of the bucket and having pivotal supports at 40 on the upstanding portions of the scoop side walls and generally directly above the rear end of the scoop.

Means is provided for operating the ejector gate comprising a jack 41 whose cylinder is pivotally mounted at 42 on brackets 43 rigidly connected with the rear end of the scoop structure and the projecting member 26. The piston rod of this jack is pivotally connected at 44 with brackets 45 which are mounted on the ejector gate structure. It will be noted that the jack 41 is centrally located at the rear of the scoop and exerts a stroke in a generally fore and aft direction approximating a right angle to the ejector gate supporting arms 39 when the gate is at the rear of the scoop as shown in Fig. 2. Upon a forward stroke of jack 41, point 44 moves to the dot-dash position of Fig. 4 when the ejector gate flap 37 is in the discharging position shown in dot-dash lines in Fig. 4 also. It will be noted that by this arrangement the ejector gate moves slowly with more power at the moment of starting the full load of material out of the scoop and moves faster with less power as the scoop becomes discharged. Means not shown is provided for the operation and control of the jack 41 by the tractor operator.

One of the novel features of our invention is the connection between the scoop 14 and the tractor device. As shown in the various views rigidly mounted at the rear end of frame 10 are a pair of side plates 46 which carry at their rear edges inwardly turned flanges 46*a* which provide a pair of parallel guides spaced transversely of the tractor device and extending generally vertically but preferably curved concavely toward the rear. As shown in the various views the curve 47 of these guides is arcuate about a center A which is approximately at a radius equal to the length of the scoop and located in the general zone vertically above the rear wheel means so as to provide certain operating characteristics hereinafter referred to. The side plates 46 are preferably rigidly connected together by a front plate 48, a bottom plate 49 and a top plate 50. Means is provided on the forward end of the scoop for connecting it to the guide flanges 46*a* in a manner permitting relative vertical movement between the scoop and the tractor frame while substantially preventing movement in all other directions. This means comprises upper rollers 51*a* and 51*b* and lower rollers 52*a* and 52*b*. The mounting for these rollers comprises solid bars 53 and 54 (best seen in Fig. 3) and a box-like structure comprising a top plate 55 rigidly connected between beam 27 and bar 53, a lower rear plate 56 rigidly connected between beam 27 and bar 54, and a front plate 57 rigidly connected between bars 53 and 54. The bar 53 supports shafts 58 and 59 which in turn rotatably support rollers 51*a* and 51*b*. The bar 54 supports shafts 60 and 61 which in turn rotatably support the rollers 52*a* and 52*b*. Referring now to Fig. 1, it will be noted that there are two rollers 51*a*, one on each side of bar 53 and engaging against the forward faces of the flanges 46*a* and two rollers 51*b* likewise engaging the rear faces of the flanges 46*a*. The rollers 52*a* and 52*b* are similarly arranged so that the scoop is held against movement in every direction except the substantially vertical movement along the guide flanges 46*a*. Relative sidewise movement between the scoop and the tractor frame is prevented by the engagement between the inner edges of flanges 46*a* and the box beam structure supporting the bars 53 and 54. This engagement will occur at the points marked 62 in Fig. 1.

Power means is provided for raising and lowering the scoop with respect to the tractor device, This comprises a pair of jacks 63, each of which has its cylinder pivotally mounted on trunnions 64 in pockets of the beam 27, and the piston rod of each jack is pivotally connected at 65 to suitable brackets carried by the plates 46. Means (not shown) is provided for supplying pressure fluid to jacks 63 under the control of the tractor operator to cause raising and lowering of the scoop relative to the tractor device.

The scoop is supported at its rear end by a pair of wheels 66 which are steerably mounted as by means of spindles 67 and knuckles 68 with rear axle 69. As best seen in Figs. 2 and 5 projecting member 26 carries brackets 70 which are spaced apart in a fore and aft direction and carry a pin 71 extending longitudinally of the scoop and approximately on the center line thereof and this pin in turn is rotatably mounted in a bracket 72 on axle 69. It results from this construction that rear axle 69 has a tilting movement about pin 71 so as to accommodate the relative tilting movement between the scoop and rear wheels when passing over rough ground. This is particularly necessary because the connection of the front end of the scoop with the tractor device holds these bars against relative sidewise movement and therefore some accommodation must be made for the movement of the rear wheels 66. Means (not shown) is provided for adjusting wheels 66 about their steering knuckle supports as is usual in steering arrangements.

It results from the connection between the rear end of the tractor device and the forward end of the scoop that as the digging edge 21 is lowered to digging position as shown in Fig. 4, the wheelbase of the combined vehicle, i. e., between wheels 66 at the rear and wheels 11 at the front, is longer as indicated by the full lines in Fig. 4 and by the dot-dash position of wheels 66 in Fig. 2. However when the scoop is raised to carrying position

as shown in Fig. 2, the wheelbase is shorter as indicated by the full lines in Fig. 2 and the dot-dash lines in Fig. 4. It results from this construction there is greater stability of the device during the digging action and greater maneuverability of the entire vehicle because of the shorter wheelbase when the scoop is in the carrying position.

The rearwardly projecting member 26 has an additional function besides supporting the rear wheel means. It will be noted in the various views that the member 26 extends beyond the rear wheel means so that it supports a bumper 26a at the rearmost point of the vehicle. A push may be applied here by a following vehicle and this push will be directly transmitted through the rigid member and the rigid scoop 14 to the digging edge 21 without placing any strain on any of the other parts of the vehicle.

In the modification of Figs. 6 and 7, the tractor device and scoop are like those just described but a different connection is provided between the rear end of the tractor device and the forward end of the scoop. In this modification a pair of parallel and substantially vertical posts 73 are rigidly supported by suitable bracket means 74 connected with frame 75 which in turn is rigidly mounted on the tractor frame 10. Two sleeves 76 are provided each slidably embracing one of the posts 73, the sleeves 76 being rigidly connected by suitable plates with the forward end of the scoop structure. Corresponding to jacks 63 previously described, a pair of jacks 77 have their cylinders pivotally mounted at 78 on trunnions in box recesses of beam 27 and the jack piston rods are pivotally connected at 79 to suitable brackets carried by the frame 75. A supply of pressure fluid (not shown) is provided for jacks 77 so as to raise and lower the scoop relative to the tractor device but this connection does not provide the change in wheelbase of the vehicle mentioned in connection with the form described in Figs. 1 to 5.

What we claim is:

1. Earth moving apparatus comprising a frame, wheel means supporting said frame, a power unit on said frame and drivingly connected with said wheel means, a pair of parallel substantially vertical posts at the rear end of said frame spaced in a plane parallel to the axis of said wheel means, a digging scoop open at its forward end, wheel means supporting said scoop at its rear end, sleeve means at the forward end of said scoop slidingly embracing said posts, and means for moving said sleeve means along said posts to raise and lower said scoop.

2. Earth moving apparatus comprising a frame, wheel means supporting said frame, a power unit on said frame and drivingly connected with said wheel means, a pair of parallel substantially vertical guides at the rear end of said frame and spaced in a plane parallel to the axis of said wheel means, a digging scoop open at its forward end, wheel means supporting said scoop at its rear end, guide means at the forward end of said scoop securing said scoop to said guides and providing for relative vertical movement between said guides and guide means, and means for moving said guide means along said guides to raise and lower said scoop.

3. Earth moving apparatus comprising a frame, wheel means supporting said frame, a power unit on said frame and drivingly connected with said wheel means, a pair of parallel substantially vertical guides at the rear end of said frame and spaced in a plane parallel to the axis of said wheel means, a digging scoop open at its forward end, wheel means supporting said scoop at its rear end for tilting movement sidewise about the longitudinally extending center line of said scoop, guide means at the forward end of said scoop securing said scoop to said guides and providing for relative vertical movement between said guides and guide means, and means for moving said guide means along said guides to raise and lower said scoop.

4. Earth moving apparatus comprising a frame, two wheels supporting said frame, said wheels being spaced one at each side of said frame toward the rear end thereof and rotatable about an axis extending transversely of said frame, a power unit mounted at the forward end of said frame and having a drive connection with said wheels, a digging scoop open at its forward end, there being a connection between the forward end of said scoop and the rear end of said frame providing relative movement between said scoop and frame in a substantially vertical direction and substantially preventing all other relative movement between them, means for causing relative movement between said scoop and frame to raise and lower said scoop, and steerable wheel means supporting said scoop at its rear end.

5. The combination of claim 4 wherein said steerable wheel means supports said scoop at its rear end for tilting movement sidewise about the longitudinally extending center line of said scoop.

6. The combination of claim 4 wherein said connection between said scoop and frame comprises an arcuate guide on one of said connected parts and rollers on the other of said connected parts engaging said guide, and the center of said arcuate guide being generally vertically above said steerable wheel means.

STEWART F. ARMINGTON.
GEORGE E. ARMINGTON.