No. 819,123. PATENTED MAY 1, 1906.

J. A. CLOUGH.

PENCIL SHARPENER.

APPLICATION FILED JULY 18, 1904.

Fig. 1.

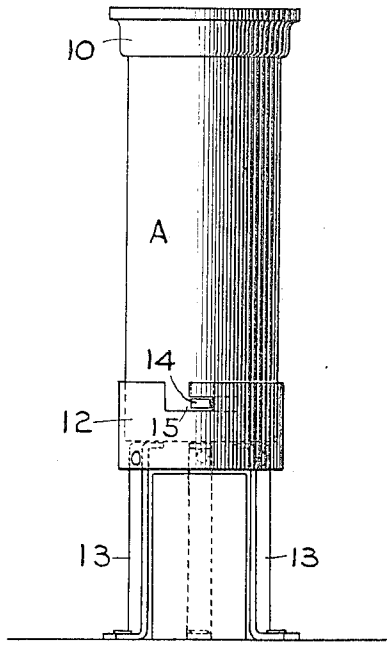

Fig. 2.

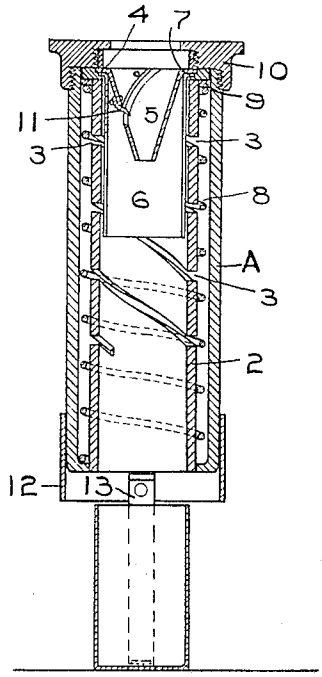

Fig. 3.

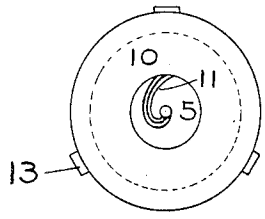

Fig. 4.

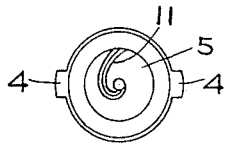

Fig. 5.

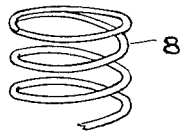

Witnesses,
W. H. Palmer.
Emily F. Otis

Inventor;
John A. Clough,
by Lothrop & Johnson
his Attorneys.

UNITED STATES PATENT OFFICE.

JOHN A. CLOUGH, OF SPRING VALLEY, WISCONSIN.

PENCIL-SHARPENER.

No. 819,123. Specification of Letters Patent. Patented May 1, 1906.

Application filed July 18, 1904. Serial No. 216,960.

To all whom it may concern:

Be it known that I, JOHN A. CLOUGH, a citizen of the United States, residing at Spring Valley, in the county of Pierce and State of Wisconsin, have invented certain new and useful Improvements in Pencil-Sharpeners, of which the following is a specification.

My invention relates to improvements in pencil-sharpeners, its object being to produce an automatic sharpener which shall be particularly simple and effective; and to this end it consists in the features of construction and combination hereinafter particularly described and claimed.

In the accompanying drawings, forming part of this specification, Figure 1 is a side elevation of my improved construction. Fig. 2 is a vertical section. Fig. 3 is a top view of my device. Fig. 4 is a similar view of the pencil-holder, and Fig. 5 is a detail of a spring forming part of my invention.

As shown in the drawings, the device comprises an outer cylinder A and an inner cylinder 2, formed with helical slots 3 to receive the ears 4 of the pencil-holder.

The pencil-holder consists of a hollow inverted cone 5, fitted in the top of an open tube 6, the upper end of the tube being formed with a flange 7, supporting the ears 4, which latter project through the slots 3 and rest upon a washer 9. Between the cylinders A and 2 is arranged a helical spring 8, upon which rests the washer 9, which in turn supports the ears 4 of the pencil-holder, the spring normally holding the holder at the top of the cylinder and against the annular cap 10. Within the pencil-holding cone is secured a curved knife 11 to properly sharpen the point of a pencil.

The pencil is sharpened by inserting it into the cone 5 and pressing down. As the holder is pressed down the ears 4 will travel downward in the slots 3, causing the holder to rotate and the knife 11 to sharpen the tip of the pencil. When the pressure is relieved, the spring will return the holder to the top of the cylinder. The tube 6 guides the cone in its downward travel, as well as preventing the shavings from getting into the slots, and thus allowing the shavings to drop through the open bottom of the inner cylinder 2.

The device is adapted to be supported by a suitable stand, as shown in Figs. 1 to 3, consisting of a ring 12, receiving the bottom of the outer cylinder and provided with supporting-legs 13. The outer cylinder preferably carries a lug 14, which interlocks with a right-angled slot 15 in the ring 12.

Having now described my invention, what I claim as new, and desire to secure by Letters Patent, is—

1. A pencil-sharpener of the class described consisting of an outer cylinder, an inner cylinder formed with helical slots, a helical spring arranged between said cylinders, a pencil-holder arranged within the inner cylinder and provided with ears extending through said slots in position to be supported upon said spring.

2. A pencil-sharpener of the class described, consisting of an open-end cylinder provided with helical slots, a helical spring arranged around said cylinder, a pencil-holder consisting of an inverted cone resting upon said spring and carrying ears extending through said slots, and a knife carried by said cone.

3. A pencil-sharpener of the class described, consisting of a cylinder provided with a helical track, a helical spring arranged around said cylinder, a washer resting upon the spring, an inner open-end tube and an inclosed open-end inverted cone resting upon said washer and coöperating with said track, and a knife carried by said cone.

4. A pencil-sharpener of the class described, consisting of an outer cylinder, a helical track arranged within said cylinder, a stand removably supporting said cylinder, a helical spring arranged within said cylinder, a pencil-holder consisting of an inner tube and an inclosed inverted open-end cone resting upon said spring, said holder coöperating with said track, a knife carried by said cone, and a cap closing the top of said outer cylinder and provided with an opening registering with said cone.

In testimony whereof I affix my signature in presence of two witnesses.

JOHN A. CLOUGH.

Witnesses:

ARTHUR P. LOTHROP,

EMILY F. OTIS.