Jan. 24, 1956

A. TRAURIG

2,731,721

POWER-OPERATED SHEARS

Filed Feb. 1, 1954

2 Sheets-Sheet 1

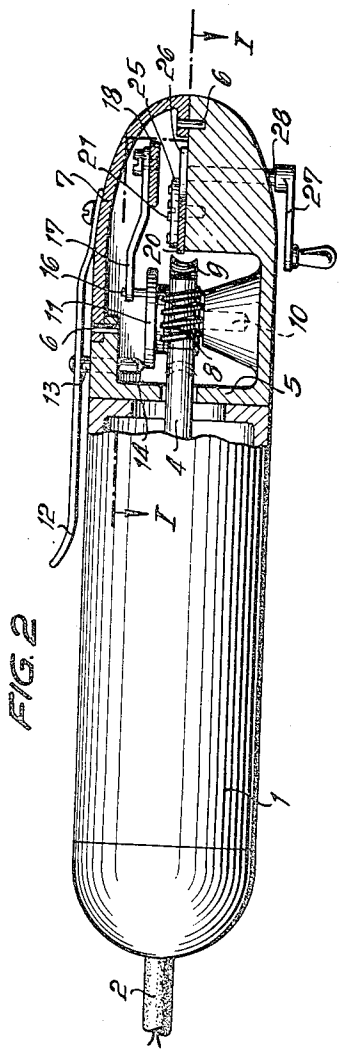

FIG. 2

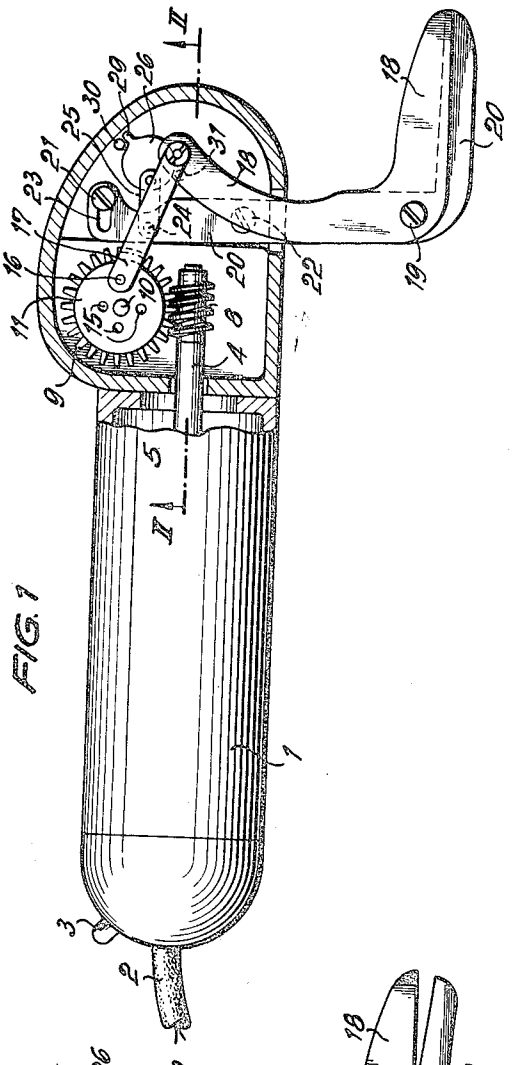

FIG. 1

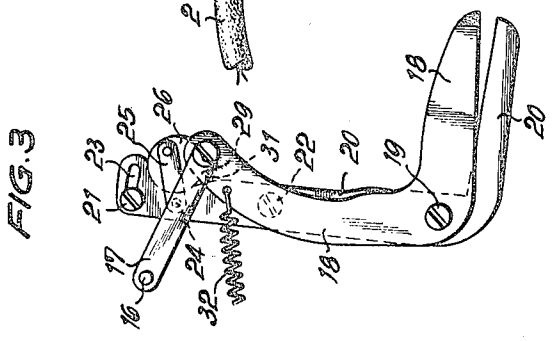

FIG. 3

Jan. 24, 1956

A. TRAURIG

2,731,721

POWER-OPERATED SHEARS

Filed Feb. 1, 1954

2 Sheets-Sheet 2

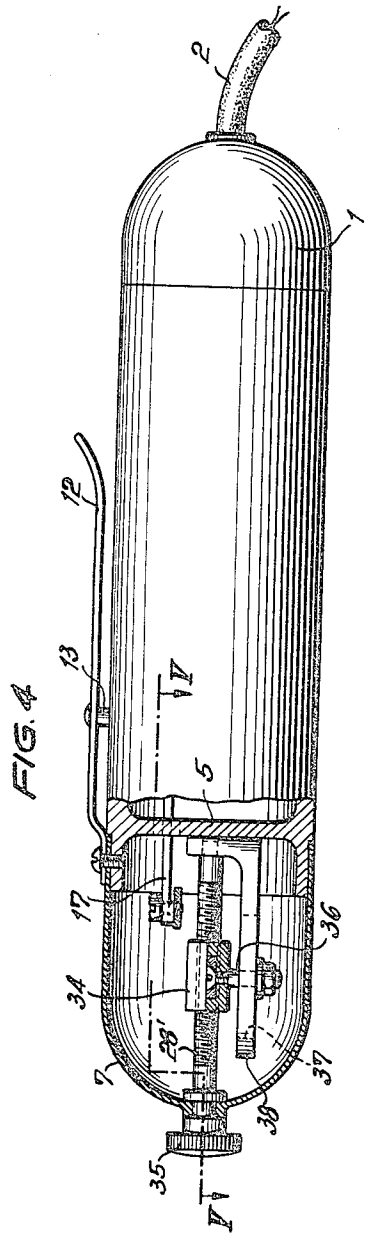

FIG. 4

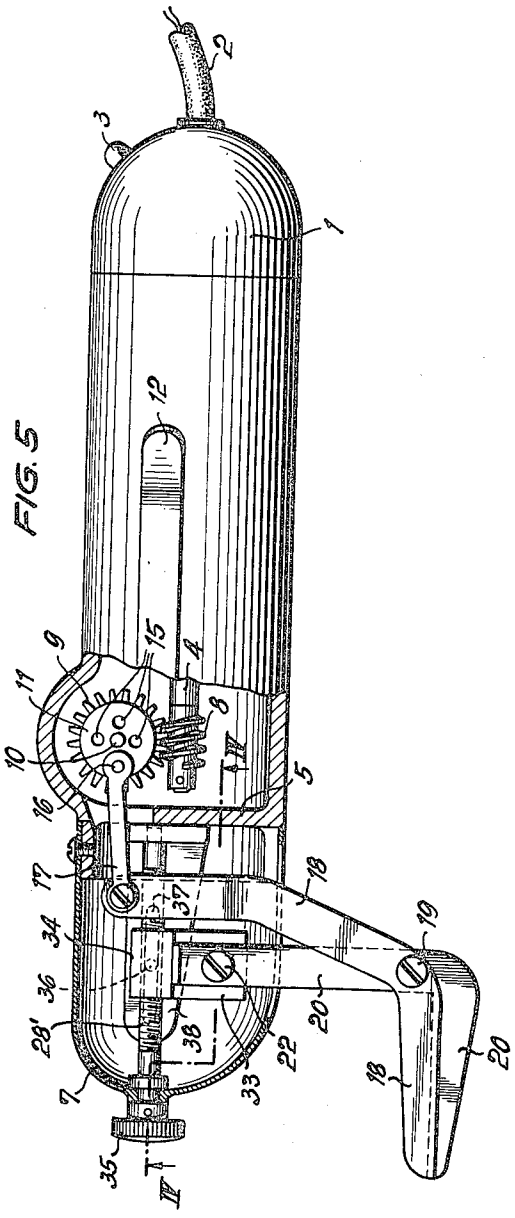

FIG. 5

United States Patent Office

2,731,721

Patented Jan. 24, 1956

2,731,721

POWER-OPERATED SHEARS

Alfons Traurig, Lam, Germany, assignor of one-half to Dr. Max Mayer, Lam, Germany

Application February 1, 1954, Serial No. 407,554

Claims priority, application Germany February 10, 1953

8 Claims. (Cl. 30—228)

Power-operated shears are known in which the blade shanks, driven by an eccentric and connecting rod, can be adjusted for varying the cutting stroke by changing the position of the connecting rod. It is frequently necessary to vary the cutting stroke because, not only the cutting speed and therefore the output, but also the manner of cutting are determined by the nature of this adjustment of the stroke. Thus, in the case of cuts carried out in several successive operations, the blades should not close up to their points, whereas, on the other hand, in the case of cuts carried out in a single operation, the blades should close right up to their points. It makes work difficult if it is necessary to open every time the housing enclosing the drive and the gear parts of the shears so as to obtain access to the adjusting parts for the purpose of changing the stroke of the blade shanks. As a result of this difficulty and inconvenience, the user frequently refrains from changing the manner of cutting and the possible cutting speed by adjusting the stroke of the blade shanks to suit the material actually to be cut. It must therefore be endeavoured to make such adjustment of the stroke of the blade shanks possible without it being necessary to first expose any enclosed gear parts.

In the case of shears with a stationary bottom blade and an upper blade pivoted thereon and driven thru the intermediary of a crank gear, worm and worm wheel enclosed in a housing, by the shaft of an electric motor also accommodated in this housing and provided with an intermediate coupling, this requirement is met according to the invention, by the fact that the stationary blade, which is guided at its upper end, is adjustable relatively to the driven lower blade by means of a manipulating mechanism which projects from the housing.

Different forms of construction may be chosen for the manipulating means and it may be connected to the stationary blade and also act on that blade in various ways.

Thus, according to one form of construction, the upper part of the stationary blade, provided for example with a slot guide, can be connected to the pin of an eccentric disk by a connecting rod, which disk is adjustable, preferably between stops, by means of a manipulating means, for example in the form of a crank. If the stationary blade can swing about a pin arranged midway its length and thus becomes a two-armed lever, the adjustment of the cutting stroke, effected from the outside by a manipulating means, must always result in an angular displacement of the stationary blade and consequently also of its cutting edge relatively to the worktable. Therefore the housing, held by the manipulating means and guided during the cutting operation, must assume a different inclined position relatively to the worktable. This is not only inconvenient but makes the work more difficult.

To enable the blade edge and also the hand-guided housing to be maintained at a constant angle of inclination to the worktable, the adjusting device for the shear blade guided at its upper end whose manipulating means projects from the housing, is so constructed that it effects an adjustment of this stationary blade along a straight

line in such a manner that the angle of the edge of the stationary blade to the central axis of the housing remains constant, the cutting edge of the blade preferably remaining parallel to the axis of the housing.

A practical form of construction of this basic solution consists in that the manipulating means is composed of a worm spindle on which a worm nut with a guidepin engaging in a slot guide rides and with which the stationary shear blade is connected, preferably detachably connected.

Several embodiments of the invention are illustrated by way of example in the accompanying drawings, in which:

Fig. 1 is a side elevation with the housing enclosing the gear parts in longitudinal section on line I—I of Fig. 2;

Fig. 2 is a top plan view of Fig. 1 with the housing enclosing the gear parts in section on line II—II of Fig. 1;

Fig. 3 shows in side elevation the cutting blades in a different position to that illustrated in Fig. 1;

Fig. 4 is a bottom plan view of a modified form of construction, partly in section on line IV—IV of Fig. 5, and

Fig. 5 is a side elevation of Fig. 4, partly in section on line V—V of Fig. 4.

In the rear end of a housing 1, constituting a handle for gripping and guiding the shears, an electric motor, not shown in the drawing, is accommodated, current being supplied to this motor by a cable 2 and controlled by a snap switch 3. The driving shaft 4 of the motor extends thru a partition 5 to the front end of the housing where a gear unit is accommodated and which can be opened by removing a part 7, connected to the remainder of the housing by means of a set pin 6, to give access to the gear unit. The driving shaft 4 carries a worm 8 meshing with a worm wheel 9 rotatably mounted on a carrier pin 10 fixed in the housing 1. This carrier pin also carries a loose disk 11 which can be coupled with the worm wheel 9 by pressing in the direction of the carrier pin 10 against the action of an interposed spring, not shown in the drawing. For effecting this coupling, a hand lever 12 actuated by the thumb of the hand holding the housing, is provided, which lever carries a pin 13 which, for example thru the intermediary of a ball 14 rotatably mounted in its end, bears against the outer side of the disk 11. By pressing this lever 12 towards the housing 1 the pin 13 is pressed inwards and thus couples the disk 11 with the worm wheel 9 so that it participates in the rotary motion thereof.

The disk 11 has several, for example four, holes 15 at different distances from the carrier pin 10. A pin 16, carried by a control rod 17, is inserted in one of these holes and forms a connecting rod for driving a shear blade 18, the stroke of which is determined by the distance of the particular hole 15 in which the pin 16 is inserted, is located from the carrier pin 10. A tension spring 32 may be attached to the blade 18, as shown in Fig. 3 only, for the sake of clearness.

The driven shear blade 18 is pivotally connected by a hinge bolt 19 to a stationary shear blade 20 which is secured on the housing by means of two studs or screws 21, 22. The upper part or shank of this shear blade has a slightly curved slot 23 in which the stud 21 slides; the stud 22 is located approximately midway the length of the blade so as to enable this blade to turn about the stud while the stud 21 is in the slot 23. Near this slot 23 the shear blade 20 carries a pin 24 to which one end of a control link 25 is connected which extends to a cam disk 26. This cam disk 26 is adjustable by means of an axle 28 which passes thru and projects from the housing 1, the axle 28 being actuated by a manipulating means which in the example chosen is in the form of a crank 27. The

cam disk 26 has a nose 29 which allows the disk to be turned only betwen stops 30, 31.

According to the degree of rotation imparted to the cam disk 26 by means of the crank 27, the stationary blade 20 will be pulled forward by link 25 a greater or lesser distance with respect to the axle 28 and at the same time swung about the stud 22. It consequently also changes its position relatively to the driven blade 18 and at the same time changes the effective cutting stroke. When the cam disk 26 and the control link 25 are in the position shown in Fig. 1, with the stud 21 at the front edge of the slot 23, the setting is for the maximum closure of the shear blades, which in this case close right up to their points, as shown in this figure. In the position illustrated in Fig. 3, when the stud 21 is at the rear end of the slot 23, the adjustment is for the smallest closure of the blades, in which case the points of the shear blades do not close completely. The closure of the cutting blades can therefore be adjusted merely by actuating the manipulating handle 27 without opening the housing, which adjustment can also be carried out when the shears are in use and without switching off the motor. Moreover, the stroke, as is known, can be changed by inserting the pin 16 into another hole 15 in the disk 11, which operation, however, is only possible after opening the housing and switching off the motor, so as to give access to the gear.

In the second form of construction shown in Figs. 4 and 5, the parts which correspond to those already described bear the same reference numerals. Contrary to the construction above described, the partition 5 is in front of the worm gear and therefore has a slot for the passage of the control or connecting rod 17, as can be seen from Fig. 5. The stationary shear blade 20 is connected with the driven blade 18 by a pivot bolt 19 and detachably connected to an extension 33 by means of a screw 22. This extension forms part of a nut 34 with internal screw thread and is movable on a part of an axle 28' provided with screw threads and projecting from the housing. On the outer end of this axle there is a removable knurled nut 35 serving as manipulating knob. The rear end of the spindle axle 28' rests in a bearing in the partition 5. The spindle nut 34 has a lateral pin projection 36 which is guided in a longitudinal slot 37 extending parallel to the axle 28 in a bearing bracket 38 also mounted on the partition 5.

Therefore, by turning the knurled nut 35 the spindle axle 28' is rotated with the result that the nut 34 is moved forward or backward with the normally stationary shear blade 20. The driven shear blade 18 can follow this movement because it is not fixed anywhere. As the stationary blade 20 is moved forward or backward out of the position shown in Fig. 5, the driven blade 18 swings slightly about the hinge bolt 19. In this manner the stroke or maximum closure of the cutting blade is adjusted but with the stationary blade 20, that is the cutting edge thereof, always in the same position relatively to the worktable.

As can be seen from Figs. 4 and 5, when the edge of the blade 20 is set parallel to the axis of the housing, it remains in this parallel position irrespective of how the cutting stroke or maximum closure between the two blades 18 and 20 is set by actuating the knurled nut 35 since the spindle axle 28' also extends parallel to the axis of the housing. Consequently there is a guarantee that in every position of adjustment the housing can always be guided at the same angle of inclination to the worktable.

To ensure that the adjusting device is easily accessible, the housing 1 has at its front end a separate removable part 7 through which the spindle axle 28 passes to the outside. If the knurled nut 35, fixed on the outer end of the axle 28' for example by means of a grub screw, is removed, the housing part 7 can be taken off in forward direction as a whole if, as is necessary for this purpose, a slot is provided in the lower portion of this part 7 in the region of the shanks of the blades 18, 20 and extends up to the rear edge of the housing part.

I claim:

1. Power-operated shears comprising in combination a normally stationary lower blade guided at its upper end, a driven upper blade pivoted on said normally stationary lower blade, a motor driven crank mechanism constituting the driving means for said upper blade, a housing accommodating said crank mechanism, and a manipulating means for adjusting said stationary blade partly relatively to said driven blade enclosed in and partly projecting from said housing.

2. Power-operated shears as set forth in claim 1, wherein the manipulating means consists of a hand operated crank.

3. In power-operated shears as set forth in claim 1, the means for adjusting the normally stationary blade relatively to the driven blade comprising an eccentric disk rotatable by means of said manipulating means, and a control rod connecting said eccentric disk with said normally stationary blade.

4. In power-operated shears as set forth in claim 1, the means for adjusting the normally stationary blade relatively to the driven blade comprising an eccentric disk rotatable by means of said manipulating means, a control rod connecting said eccentric disk with said stationary blade, and stops limiting the rotation of said eccentric disk.

5. Power-operated shears as set forth in claim 1, wherein the stationary blade is adjusted in a straight line thereby retaining its angular relationship to the axis of the housing.

6. Power-operated shears as set forth in claim 1, wherein the manipulating means comprises a rotatable threaded spindle, a nut riding on said spindle and connected to the normally stationary blade, a pin on said nut, and a slot guide for said pin carried by the housing.

7. Power-operated shears as set forth in claim 1, wherein the manipulating means comprises a rotatable threaded spindle, a nut riding on said spindle and connected to the normally stationary blade, a pin on said nut, a slot guide for said pin carried by the housing, and a knurled nut detachably mounted on the end of said spindle outside said housing.

8. Power-operated shears as set forth in claim 1, wherein a part of the housing is detachable and has in its under side in the vicinity of the shear blades a slot extending toward its rear edge.

References Cited in the file of this patent

UNITED STATES PATENTS

1,218,173	Ericksson	Mar. 6, 1917
1,321,918	Herman	Nov. 18, 1919
2,286,552	Klose	June 16, 1942
2,348,895	Gaudio	May 16, 1944