Dec. 20, 1955 F. J. KLEIN 2,727,858

PLATING FIXTURE

Filed April 7, 1952

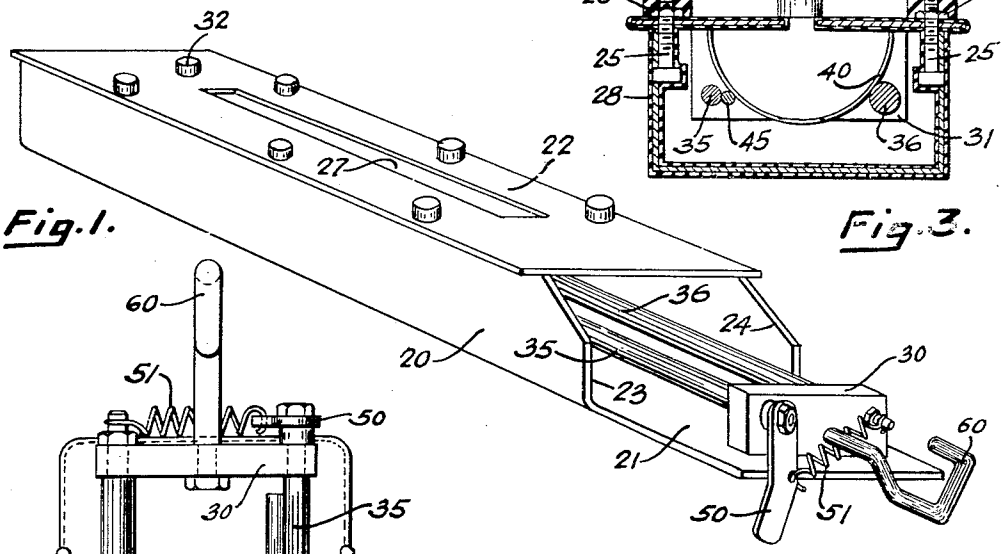

Fig. 1.

Fig. 3.

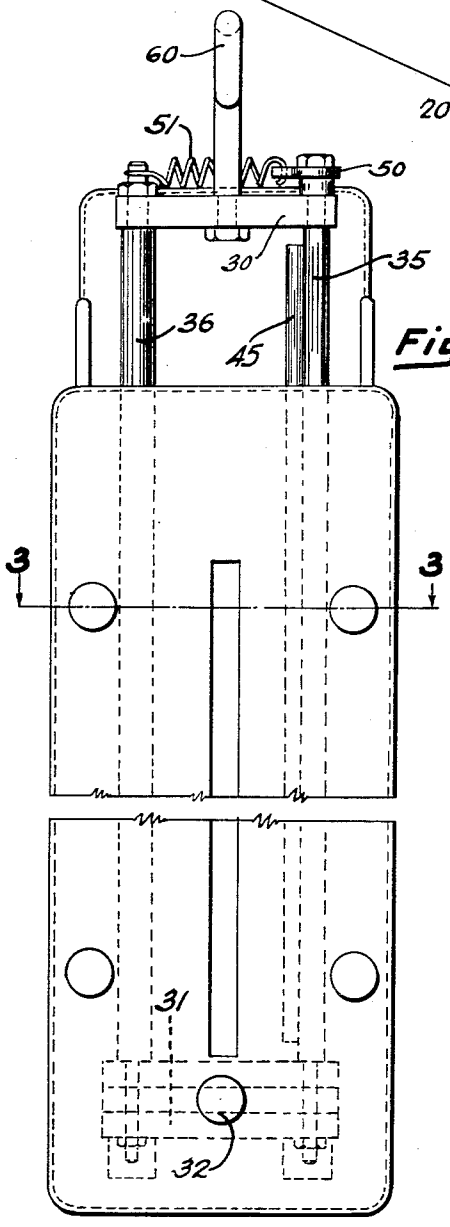

Fig. 2.

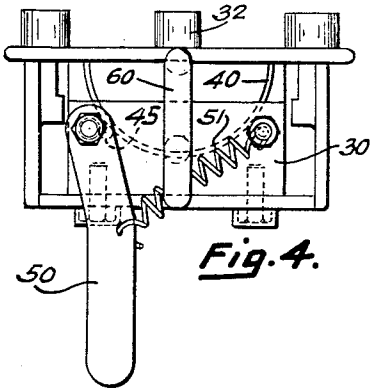

Fig. 4.

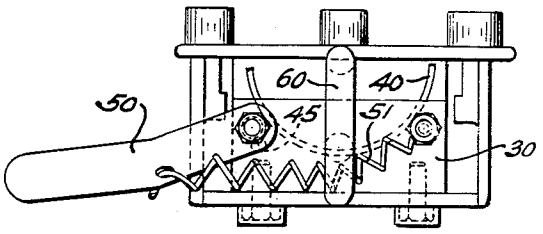

Fig. 5.

INVENTOR.
FRANK J. KLEIN
BY
Willits, Hardman and Fisher
HIS ATTORNEYS

United States Patent Office 2,727,858
Patented Dec. 20, 1955

2,727,858

PLATING FIXTURE

Frank J. Klein, Dayton, Ohio, assignor to General Motors Corporation, Detroit, Mich., a corporation of Delaware

Application April 7, 1952, Serial No. 281,020

3 Claims. (Cl. 204—297)

This invention relates to a fixture for holding work-pieces to be immersed in a plating bath.

It is among the objects of the present invention to provide a fixture into which semicircular bearings may easily be placed in contiguous alignment and so held while the fixture is bodily immersed in the plating bath.

A further object of the present invention is to provide a fixture into which a plurality of semi-circular bearings may be placed and held in contiguous alignment for plating purposes, the fixture being so designed and constructed that the concaved surfaces of all of the bearings are completely and directly exposed to the electro-depositing forces while the opposite surfaces of the bearings are substantially shielded from direct exposure to said forces.

The fixture is so designed that clamping means under the influence of a spring securely holds the respective bearings in contiguous alignment in the fixture while it is immersed in the plating bath, said clamping means being automatically released to facilitate unloading and reloading of the fixture when it is placed upon a work-bench for that purpose. Removal of the fixture from the work bench, after bearings have been placed in the fixture will again automatically render the clamping means effective.

Further objects and advantages of the present invention will be apparent from the following description, reference being had to the accompanying drawings wherein a preferred embodiment of the present invention is clearly shown.

In the drawings:

Fig. 1 is a perspective view of the fixture embodying the present invention.

Fig. 2 is a front view of the fixture.

Fig. 3 is a transverse sectional view of the fixture taken along the line and in the direction of the arrows 3—3 in Fig. 2.

Fig. 4 is an end view of the fixture showing bearings clamped in position therein.

Fig. 5 is a similar end view showing the bearing unclamped.

Referring to the drawings the fixture is shown comprising an elongated rectangular container **20** having a bottom side **21**, a top side **22** and two side walls **23** and **24**. The container may be made up in any suitable manner. In the present drawings, however, the two side walls **23** and **24** are shown integral with the bottom wall **21** the top wall **22** being attached to the side walls by means of studs **25** welded to the side walls **23** and **24** extending through openings in the top wall or cover **22** and provided with nuts **26** which secure the cover to the side walls. The cover **22** has an elongated aperture **27**. In order that the container walls will not be subjected to electroplating when immersed in the plating bath, all surfaces thereof inside and out as well as the studs **25** and their nuts **26** are covered with a rubberlike material **28** which insulates the casing against plating deposits. As shown in Fig. 1, the two sides **23** and **24**, and the cover **27** terminate short of the end of the bottom surface

21, of the container, providing an opening at this one end of the container for the insertion of work-pieces in the said container.

The end of the bottom wall surface **21** of the container adjacent this opening has a block **30** of any suitable metallic material attached thereto in any suitable manner preferably by insulated screws passing through the bottom wall **21** of the container and into said block thereby completely insulating the entire container from any current carrying part of the fixture. Similar blocks **31** shown dotted lines in Fig. 2 and in elevation in Fig. 3 are made of insulating material are attached to the cover **22** of the container near the end thereof opposite the opening through which the work-pieces are introduced into said container. Any suitable means may be used to attach said blocks **31** to said cover preferably a bolt passing through the cover and into said block **31** the bolt being coated with insulation as shown at **32**. The two blocks **30** and **31** at opposite ends of the container support bars **35** and **36** in spaced relation and substantially parallel of the container, said bars being predeterminately spaced from the cover **22** in order that the semicircular work-pieces or bearings **40**, placed upon said bars when introduced into the container through the opening at one end thereof, are free of the inside surface of the cover **22** as shown in Fig. 5. As each bearing is placed in the container the adjacent one is moved rearwardly until the container is loaded with a certain number of bearings all in contiguous alignment on said bars **35** and **36**. Bar **36** is immovably secured between the supporting blocks **30** and **31** while bar **35** is rotatably supported by said blocks, the bars extending through block **30** to the outside thereof. The bar **30**, as shown in Fig. 3 has a longitudinal portion **45** eccentric of the bar thereby providing a cam which is movable into engagement with all of the bearings **40** within the container by rotation of the bar **35**, the eccentric portion of bar **35** urging all of the bearings into clamping engagement with the inner surface of the cover **22** and also into electrical contact with the bar **36** as shown in Fig. 4. It may be stated here that both bar **35** and bar **36** are not coated with insulating material in order to electrically engage the bearings in the container and act as conductors for the electroplating current.

The end of bar **35** extending outside the supporting block **30** has a lever **50** secured thereto, said lever having one end of a spring **51** attached to it, the other end of said spring being anchored to an extension of the bar **36** outside the block **30**. The spring constantly exerts a tension upon the lever **50** tending to rotate the bar **35** so that its eccentric portion **45** moves toward clamping engagement with any bearings within the container. Thus, while the bearings are being placed within the container the lever **50** may be operated to rotate the bar **35** clockwise as regards Fig. 3 in which instance the eccentric portion **45** of said bar is moved in a direction away from the inner surface of the cover and also from the stationary bar **36** in the container. This permits the bearings **40** to be placed upon the bars **35** and **36** and successively be moved back into the container as the succeeding bearings are placed therein. When the container has been loaded with the proper number of bearings the lever **50** is released permitting the spring **51** to rotate the lever **50** so that its attached bar **35** is likewise rotated and the eccentric portion **45** moved into engagement with the bearings in the container whereby said bearings are clamped against the cover **22** and the bar **36** and securely held in contiguous alignment and in proper positions relatively to the elongated aperture **27** in the cover **22** which aperture is equi-distant from any portion of the inner concave surface of all of the bearings clamped in position within the container.

Figs. 1, 4 and 5 illustrate one feature of the present invention which entails the arrangement of lever **50** relatively to the bottom wall **21** of the fixture. During loading the fixture **20** is usually placed on a work bench and due to the arrangement of the lever **50**, as shown in Figs. 1, 4 and 5, this lever projecting beyond the plane of the bottom surface **21** of the container will upon striking the work bench be moved clockwise as regards these figures from the clamping position as shown in Figs. 1 and 4, to the unclamping position as shown in Fig. 5 which permits easy removal of the unclamped bearings while the fixture is resting upon the loading table or work bench. This also permits the insertion of a new supply of bearings to be plated and when the container is properly loaded its removal from the work bench will permit the lever **50** again to be moved by spring **51** into the clamping position as shown in Figs. 1 and 4, in which the supporting bar **35** and its eccentric portion **45** is rotated to engage and clamp all of the bearings within the container in proper position against the top **22** and the bar **26** so as to be properly located and held relatively to the aperture **27** for plating purposes.

The block **30** may be termed the top end of the fixture. It has a conductor hook **60** secured thereto so as to be in electrical engagement with both bars **35** and **36** inside the container, the hook portion **60** being placeable upon the conductor of the plating machine so as to complete electrical connection between this conductor of the plating machine and the supporting bars **35** and **36** within the container. The hook is of sufficient length so as to suspend the fixture to the plating machine with the fixture itself completely immersed in the plating fluid.

It may be seen that this fixture provides a container for holding and supporting a plurality of semicircular bearings in such a manner that the electroplating forces are directly aimed at the interior or concave surface of the bearings while the opposite, exterior surfaces of all of the bearings are shielded from direct contact by said electroplating forces. The fixture has provisions for spacing the entire interior and concave surfaces of the bearings equi-distant from the aperture in said container through which the electroplating forces are directed toward said bearings and thus an even plating with uniform thickness is deposited upon the entire surface of all of the bearings within the container.

The construction of the fixture facilitates loading and unloading of the fixture thereby contributing to commercial precision plating of semicircular bearings with minimum time requirements.

While the embodiments of the present invention as herein disclosed, constitutes a preferred form, it is to be understood that other forms might be adopted.

What is claimed is as follows:

1. A fixture for holding a plurality of workpieces to be plated, said fixture consisting of an elongated container into which the workpieces are insertable and having a flat wall, said flat wall being provided with an elongated opening, said container having two parallel conductor bars mounted therein longitudinally thereof in fixed relative positions parallel to said wall of the container at least one of which includes means for connecting the bar to a source of plating current and upon which workpieces are placed in contiguous alignment, one of said bars being rotatable on its own longitudinal axis and having radially eccentric means extending longitudinally thereof engageable with the workpieces on the bars upon rotation of said one bar in one direction to move the workpieces thereby against the other of said bars and thereby move the workpieces against the said container wall and clamp the same in position against the container wall as retained by said other bar and the eccentric means on the said one bar, a spring operably connected with said one bar yieldably urging the same rotatively in the said one direction to effect the said movements of the workpieces supported on the said bars, and lever means connected to the said one bar oppositely to the rotative effect of the spring upon the said one bar.

2. A device in accordance with claim 1 in which the said lever means extends transversely beyond the container to effect engagement of said lever with a surface upon which the container is placed during loading with said lever effecting rotation of said one bar thereby oppositely to the rotative effect of the spring upon the said one bar to place the said eccentric means of the said one bar out of engagement with workpieces loaded upon the said bars.

3. A fixture for holding work-pieces to be plated, said fixture consisting of an elongated, rectangular container having one side provided with an elongated opening and a loading opening at one end for the introduction and removal of the work-pieces, two parallel supporting bars parallel to said opening supported between the ends of the container, one of said bars being rotatable on its own longitudinal axis and having an eccentric extension between the ends of the container, said bars supporting the work-pieces in contiguous alignment within the container and parallel to said opening, a lever attached to the rotatable bar outside the container, a hook secured in one end of the container and electrically connected with the other of said bars, and a spring attached to said lever, constantly urging the lever to rotate the attached bar for urging its eccentric extension against the respective work-pieces on the bars whereby said work-pieces are clamped against the side of the container having said opening and in electrical contact with the bar connected with the hook.

UNITED STATES PATENTS

References Cited in the file of this patent

300,950	Cassel	June 24, 1884
384,806	White	June 19, 1888
1,725,877	Maag	Aug. 27, 1929
2,500,206	Schaefer	Mar. 14, 1950